dormakaba

RCI 2019 Security Products Price Book USA

Effective May 13, 2019

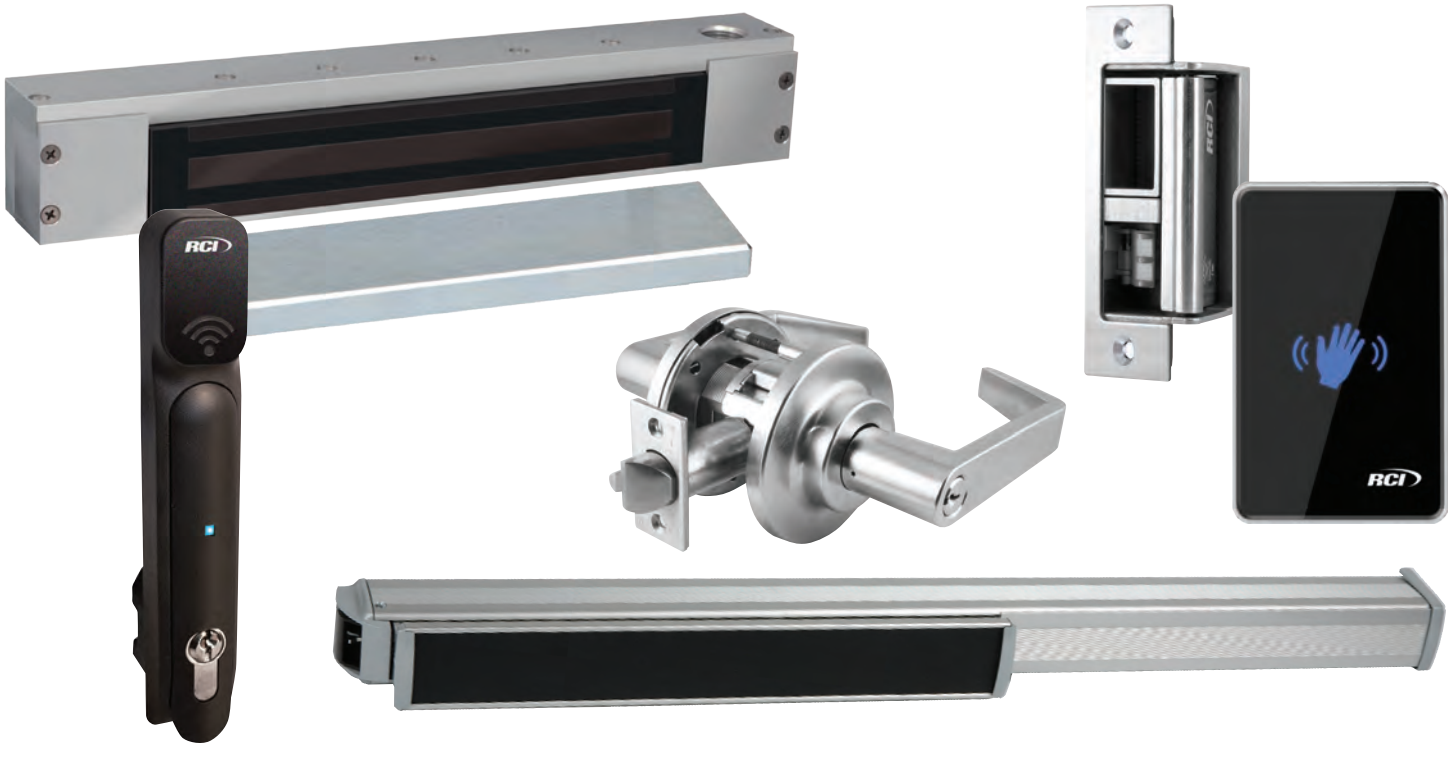

dormakaba

Table of Contents

What's New		6
Electromagnetic Locks	8310 MultiMag®	8
	8320 MultiMag®	8
	8310-IQ IntelliMag®	9
	8320-IQ IntelliMag®	9
	DE8310 Delayed Egress	10
	EW8310 Early Warning	11
	171HD Magnetic Lock	11
	8360 Mortise MiniMag®	12
	8365 Mortise MicroMag®	12
	8371 Surface MiniMag®	13
	8372 Surface MiniMag®	13
	8375 Surface MicroMag®	14
	8380 GateMag®	14
	Accessories	15-17
	Building Code Signs	18
Electric Strikes	0161 3/4" Semi-Mortise Rim Strikes	20
	0162 3/4" Surface Mount Rim Strikes	20
	0163 1/2" Surface Mount Rim Strikes	21
	0563 1/2" Surface Mount Rim Strikes	21
	F1114 Centerline Strikes	22
	F1119 Centerline Strikes	22
	F2164/2364 All-In-One Strikes	23
	4 Series Centerline Strikes	24
	6 Series Centerline Strikes	25
	7 Series Centerline Strikes	26
	12C Compact Strike	27
	VR165 Vertical Rod Strike	27
	VR166 Vertical Rod Strike	27
	Modular Strike Inserts	28
	Modular Strike Faceplates	29
	Accessories	30-31
Keypads & Readers	5355R Proximity Reader & Keypad Combo	33
	5395R Proximity Reader	33
	6005R Mullion Proximity Reader	33
	125kHz Proximity Cards & Fobs	34
	9325 Keypads	35
	9212 Keypads	36
	9320 Reader + Controller	37
	9321 Reader + Controller	37
	9322 Reader + Controller	38
	9323 Reader + Controller	38

Switches	906 Handicap Pushbutton	40
	908 Exit Pushbutton	40
	916 Tamper-Resistant Handicap Pushbutton	41
	918 Tamper-Resistant Exit Pushbutton	41
	990 Oversized Tamper-Resistant Pushbutton	42
	991 Pneumatic Time Delay Pushbutton	43
	919 Rotary Release Pushbutton	44
	920 Emergency Release Keyswitch/Pushbutton	44
	917 Easy Touch Pushbutton	45
	972 All-In-One Illuminated Pushbutton	45
	970 Illuminated Exit Pushbutton	46
	975 Illuminated Exit Pushbutton	46
	980 Economy Pushbutton	47
	903 Audible Alert	47
	960 Tamper-Resistant Keyswitch	48
	904P Emergency Pull Station	49
	913 Microwave Motion Switch	49
	909 Rocker Switch	49
	914 Sounder	49
	915 Passive Infrared	50
	915AFI Active Focused Infrared	50
	946 Square Push Plate	51
	950 Round Push Plate	51
	946T Square Short-Range Touchless Actuator	52
	950T Round Short-Range Touchless Actuator	52
	910TC Touchless Switch	53
	940 Rectangular Push Plate	53
	941 Mullion Push Plate	54
	947 Dual Vestibule Push Plate	54
	9LP36 Low Profile Push Plate	55
	9BOLL Bollard/Mounting Post	55
	9RCT433 Transmitters	55
	9DRCR433 Receivers	55
	Accessories	56
	9500/9501 Mortise Pin Transfers	57
	9507/9509 Flex Loops	57
	9503/9505 Ball Transfers	57
	9520 Series Electrified Hinges	57
	9512/9513 Bridge Cables	58
	9530 Balanced Magnetic Contact DPS	58
	9540 Recessed Magnetic Contact DPS	58

Locksets	C800 Series Cylindrical Locksets	60-61
Specialty Locks	3590 Lock 'N' Prox	63
	3510LM Electromechanical Cabinet Lock	64
	3513 Electromechanical Cabinet Lock	64
	3525 Electromechanical Rack Handle Lock	65
	3520 Electronic Latch	66
	MEM4400 Compact Electromechanical Lock	66
	S2500A Mini Electromagnetic Lock	66
	EM-MAG1500 Compact Electromechanical Lock	67
	MEM2400 Compact Electromechanical Lock	67
Exit Devices	6451 Exit Sensor Bar	69
	120 Series Exit Bar	70
	1200 Series Mechanical Rim Exit Bar	71
	1300 Series Electrified Rim Exit Bar	72-73
	Exterior Trims	75
Power Supplies	10-1 1.5A Power Supply	77
	10-3 3A Power Supply	77
	10-4 4A Power Supply	78
	Accessories	79-80
Door Controllers and Peripherals	Keyscan LUNA™ SDACSKT - SDAC Smart Kit	81
	Keyscan LUNA™ SDAC - Single Door Access Control Unit	81
	K-SMART3 13.56MHz BLE Reader	81
	K-SECURE 1K ISO Smartcard	82
	K-SECURE 1K MiFare Smartcard	82
	K-SF-1K Smart Fob	83
	Keyscan LUNA™ SDAC Replacement Antenna	84
	PS1225 Transformer	84
Terms & Conditions		85

KEYSCAN LUNA™

A giant leap for small business access control.

Keyscan LUNA™ is a cost-effective access control system specifically designed for installations of 1 to 6 doors.

The combination of Single Door Access Control units (SDAC) and comprehensive software, together with low computer overhead, helps make access control affordable for small businesses. Security, accountability, user management and reporting is now available at a fraction of the cost of comparable systems.

E-Plex® 7900 shown with Keyscan Mobile Access Credential

Trust dormakaba for solutions that provide the perfect blend of form, flexibility and function.
Our comprehensive line of networked access systems, electronic access controls, wireless and stand-alone electronic locks are designed for all commercial building applications with a single goal in mind– making access in life smart and secure.

Keyscan networked access control

RCI electronic access controls

E-Plex, Simplex and Powerplex stand-alone and wireless access controls

What's New

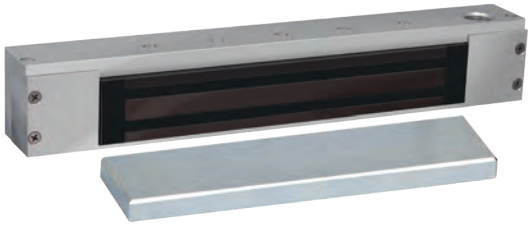

171HD Magnetic Lock for Hazardous Locations

Specifically designed for hazardous locations, the RCI 171HD magnetic lock is a UL Listed magnetic lock that meets the requirements for Class I, Division 2 applications. The 171HD offers continuous monitoring capability for open/close status or attempted unauthorized entry.

Strike Marking Template Kit

The SMT-01 strike marking template kit is ideal for accurately guiding prepping of the frame for the installation. Now available for F2 electric strike.

910TC Touchless Switch

The new RCI 910TC touchless switch operates automatic doors with just a wave of the hand. Hands-free operation is ideal for any workplace environment where the spread of infectious disease through surface contact is a concern. The 910TC features remote control, manual override in the event of power loss, and adjustable activation zone.

6 Series Lip Bracket & Aluminum Faceplates

RCI continues to bring you valuable accessories that offer reliability and convenience. These accessories complete the installation leaving a finished and clean installation.

VR166 Vertical Rod Strike

Simple locking solution for surface vertical rod exit devices having a Pullman style latch

Keyscan LUNA™ SDACSKT Smart Kit

The combination of AC unit, one reader, 10 credentials, power supply and comprehensive software, brings affordable access control security, accountability, and reporting to small businesses for a fraction of the cost of other comparable systems.

0163 1/2" Rim Solenoid Electric Strike

This solenoid rim strike is a surface-mounted electric strike designed to work with Pullman style rim exit device latches.

Electromagnetic Locks

RCI Electromagnetic Locks

8310 MultiMag®

For single outswinging interior or perimeter doors.
10-1/2"W x 2-7/8"H x 1-5/8"D (268mm x 73mm x 41mm) –
Includes 1/4" (6mm) mounting bracket
Armature Plate: 7-7/16"W x 2-3/8"H x 5/8"D
(190mm x 61mm x 16mm)

8320 MultiMag®

For double outswinging interior or perimeter doors.
21-1/8"W x 2-7/8"H x 1-5/8"D (536mm x 73mm x 41mm) –
Includes 1/4" (6mm) mounting bracket
Armature Plate: 7-7/16"W x 2-3/8"H x 5/8"D
(190mm x 61mm x 16mm) each

8310 MultiMag® - for Single Outswinging Doors		List Price
8310 x 28	Single Mag 12/24VDC x 28	$496.00
8310 DSS x 28	Single Mag DSS 12/24VDC x 28	$581.00
8310 SCS x 28	Single Mag SCS 12/24VDC x 28	$605.00
8310 DSS/SCS x 28	Single Mag DSS/SCS 12/24VDC x 28	$675.00
40 finish		add $39.00

8320 MultiMag® - for Double Outswinging Doors		List Price
8320 x 28	Double Mag 12/24VDC x 28	$990.00
8320 DSS x 28	Double Mag 2DSS 12/24VDC x 28	$1,159.00
8320 SCS x 28	Double Mag 2SCS 12/24VDC x 28	$1,207.00
8320 DSS/SCS x 28	Double Mag 2DSS/SCS 12/24VDC x 28	$1,352.00
40 finish		add $50.00

How To Order

MultiMag®				Finish
Single – Magnet	10		28	– Brushed Anodized Aluminum[2]
Double – Magnet	20		40	– Brushed Anodized Dark Bronze
83			x	
		SCS		– Security Condition Sensor
		DSS		– Door Status Sensor
		DSS/SCS		– Door Status Sensor and Security Condition Sensor
				Options

Example: **8310 SCS x 28**

[2]Standard

RCI Electromagnetic Locks

8310-IQ IntelliMag®

For single outswinging interior or perimeter doors.
10-1/2"W x 2-7/8"H x 1-5/8"D (268mm x 73mm x 41mm) –
Includes 1/4" (6mm) mounting bracket
Armature Plate: 7-7/16"W x 2-3/8"H x 5/8"D
(190mm x 61mm x 16mm)

8310 IntelliMag® - for Single Outswinging Interior or Perimeter Doors		List Price
8310-IQ x 28	8310IQ LSS x Time Delay x 28	$713.00
40 finish		add $39.00

8320-IQ IntelliMag®

For double outswinging interior or perimeter doors.
21-1/8"W x 2-7/8"H x 1-5/8"D (536mm x 73mm x 41mm) –
Includes 1/4" (6mm) mounting bracket
Armature Plate: 7-7/16"W x 2-3/8"H x 5/8"D
(190mm x 61mm x 16mm) each

8320 IntelliMag® - for Double Outswinging Interior or Perimeter Doors		List Price
8320-IQ x 28	8320IQ LSS x Time Delay x 28	$1,425.00
40 finish		add $50.00

How To Order

		IntelliMag®			
	10	–Single Magnet			
	20	–Double Magnet			
83		-IQ	x		
				28	–Brushed Anodized Aluminum[2]
				40	–Brushed Anodized Dark Bronze
					Finish

Example: **8320-IQ x 40**

[2]Standard

RCI Electromagnetic Locks

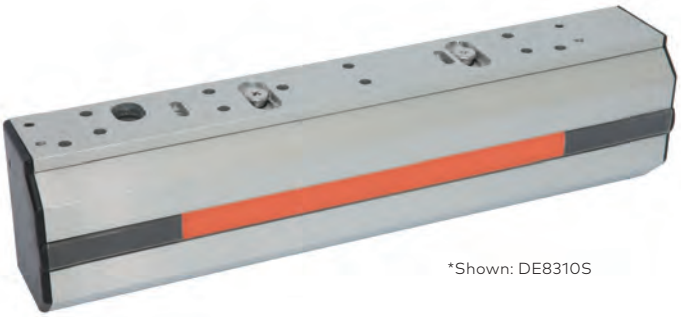

*Shown: DE8310S

DE8310 Delayed Egress

For single outswinging perimeter door.
DE8310: 10-13/16"W x 2-7/8"H x 2-1/8"D (275mm x 73mm x 54mm) – Includes 1/4" (6mm) mounting bracket
DE8310S: 11-3/4"W x 2-7/8"H x 2-1/8"D (299mm x 73mm x 54mm) – Includes 1/4" (6mm) mounting bracket
Armature Plate: 7-7/16"W x 2-3/8"H x 5/8"D (190mm x 61mm x 16mm)

Delayed Egress Electromagnetic Lock - for Single Outswinging Perimeter Door		List Price
DE8310 x 28	Delayed Egress with External Sounder	$1,207.00
DE8310S x 28	Delayed Egress with Built-in Sounder	$1,388.00

How To Order

DE8310		x	28
	S	–Built-In Sounder	
		Options	

Example: **DE8310 S x 28**

EW8310 Early Warning

For single outswinging perimeter doors.
10-13/16"W x 2-7/8"H x 2-1/8"D (275mm x 73mm x 54mm) – Includes 1/4" (6mm) mounting bracket
Armature Plate: 7-7/16"W x 2-3/8"H x 5/8"D (190mm x 61mm x 16mm)

Early Warning Electromagnetic Lock - for Single Outswinging Perimeter Doors		List Price
EW8310 x 28	Early Warning 12 to 24VDC x 28	$769.00

How To Order

EW8310	**x**	**28**

RCI Electromagnetic Locks

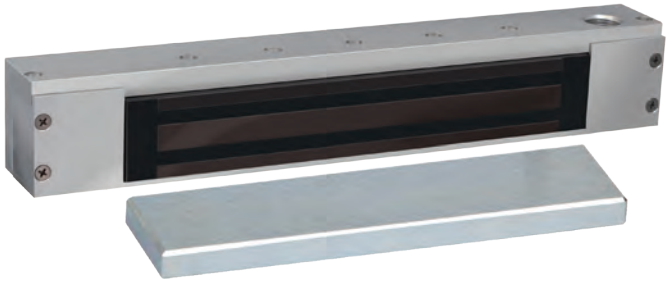

171HD Magnetic Lock for Hazardous Locations

14"W x 1-3/4"H x 2"D (355mm x 45mm x 51mm)
Armature Plate: 10-3/4"W x 1-3/4"H x 5-8"D (273mm x 45mm x 16mm)

171HD Magnetic Lock for Hazardous Locations		List Price
171HD	For single out-swinging doors, push side mount.	$2,017.00
ZB171HD	For single in-swinging doors, pull side mount. Includes "Z" bracket inswing assembly kit.	$2,155.00

8360 Mortise MiniMag®

For sliding doors.
9"W x 1-1/2"H x 1-1/6"D (229mm x 38mm x 27mm) – Includes 3/4" (19mm) mounting tabs
Armature Plate: 7-1/4"W x 1-1/2"H x 1/2"D (185mm x 38mm x 13mm)

Mortise MiniMag® - for Single Doors		List Price
8360 x 28	Mortise MiniMag® 12/24VDC x 28	$412.00

How To Order

8360	x	28

RCI Electromagnetic Locks

8365 Mortise MicroMag®

For small enclosures.
7-15/16"W x 1-11/32"H x 13/16"D (202mm x 34mm x 21mm) – Includes 11/16" (17.5mm) mounting tabs
Armature Plate: 5-1/8"W x 1-1/4"H x 21/64"D
(130mm x 32mm x 8.5mm)

Mortise MicroMag® - for Small Enclosures		List Price
8365 x 28	Mortise MiniMag® 12/24VDC x 28	$303.00

How To Order

8365	x	28

RCI Electromagnetic Locks

8371 Surface MiniMag®

For single outswinging interior or perimeter doors.
9-3/8"W x 1-7/8"H x 1"D (238mm x 48mm x 25mm) –
Includes 3/16" (5mm) mounting bracket
Armature Plate: 7-1/4"W x 1-1/2"H x 1/2"D
(185mm x 38mm x 13mm)

Surface MiniMag® - for Single Outswinging Interior Doors		List Price
8371 x 28	Single MiniMag® 12/24VDC x 28	$370.00
8371 SCS x 28	Single MiniMag® SCS 12/24VDC x 28	$432.00
8371 DSS x 28	Single MiniMag® DSS 12/24VDC x 28	$418.00
8371 DSS/SCS x 28	Single MiniMag® DSS/SCS 12/24VDC x 28	$480.00
40 finish		add $56.00

8372 Surface MiniMag®

For double outswinging interior or perimeter doors without mullions.
18-3/4"W x 1-7/8"H x 1"D (476mm x 48mm x 25mm) –
Includes 3/16" (5mm) mounting bracket
Armature Plate: 7-1/4"W x 1-1/2"H x 1/2"D
(185mm x 38mm x 13mm) each

Surface MiniMag® - for Double Outswinging Interior Doors w/o Mullions		List Price
8372 x 28	Double MiniMag® 12/24VDC x 28	$738.00
8372 SCS x 28	Double MiniMag® SCS 12/24VDC x 28	$834.00
8372 DSS x 28	Double MiniMag® DSS 12/24VDC x 28	$864.00
8372 DSS/SCS x 28	Double MiniMag® DSS/SCS 12/24VDC x 28	$960.00
40 finish		add $111.00

How To Order

MiniMag®

Single Magnet	71			28	– Brushed Anodized Aluminum[2]
Double Magnet	72			40	– Brushed Anodized Dark Bronze
83			x		
		SCS		– Security Condition Sensor	
		DSS		– Door Status Sensor	
		DSS/SCS		– Door Status Sensor And Security Condition Sensor	

Finish **Options**

Example: **8371 SCS x 28**

[2]Standard

RCI Electromagnetic Locks

8375 Surface MicroMag®

For swinging doors on small enclosures.
6-17/32"W x 1-1/2"H x 13/16"D (166mm x 38mm x 21mm) –
Includes 1/8" (3mm) mounting bracket
Armature Plate: 5-1/8"W x 1-1/4"H x 21/64"D
(130mm x 32mm x 8.5mm)

Surface MicroMag® - for Swingong Doors on Small Enclosures		List Price
8375 x 28	Surface MicroMag® 12/24VDC x 28	$261.00

How To Order

8375	x	28

8380 GateMag®

For interior or exterior perimeter gates.
8-7/8"W x 2-1/2"H x 1-3/4"D (225mm x 63mm x 45mm)
Armature Plate: 7-7/16"W x 2-3/8"H x 5/8"D (190mm x 61mm x 16mm)

GateMag®		List Price
8380 x 32D	GateMag® x RLS x 32D	$507.00

How To Order

8380	x	32D

RCI Electromagnetic Locks Accessories

Angle Brackets

For narrow aluminum frames or center-hung single-acting doors, when inadequate space is left for mounting.

- Available in Brushed Anodized Aluminum (28) or Brushed Anodized Dark Bronze (40). Please specify when ordering.

Model	Dimensions	Finish	Compatible with	List Price
AB-01	1"H x 1"W x 10-1/2"L	28/40	8310	$44.00
AB-02	1-1/2"H x 1"W x 10-1/2"L	28/40	8310	$48.00
AB-03	1-1/2"H x 1-1/4"W x 10-1/2"L	28/40	8310	$50.00
AB-20	1"H x 1"W x 21"L	28/40	8320	$72.00
AB-21	1-1/2"H x 1"W x 21"L	28/40	8320	$74.00
AB-22	1-1/2"H x 1-1/4"W x 21"L	28/40	8320	$76.00
AB-710	1"H x 1"W x 9-3/8"L	28/40	8371	$44.00
AB-711	1-1/2"H x 1"W x 9-3/8"L	28/40	8371	$48.00
AB-712	1-1/2"H x 1-1/2"W x 9-3/8"L	28/40	8371	$50.00
AB-713	1-1/2"H x 2"W x 9-3/8"L	28/40	8371	$52.00
AB-720	1"H x 1"W x 18-3/4"L	28/40	8372	$72.00
AB-721	1-1/2"H x 1"W x 18-3/4"L	28/40	8372	$74.00
AB-722	1-1/2"H x 1-1/2"W x 18-3/4"L	28/40	8372	$76.00
AB-723	1-1/2"H x 2"W x 18-3/4"L	28/40	8372	$79.00
AB179NR-258	1-1/2"H x 2-5/8"Wx 14"L For door with No Reveal - Single - Angle Bracket	28	171HD	$259.00
AB179R-118-158	1"H x 1"W x 14"L For 1-1/8" to 1-5/8"Reveal - Single - Angle Bracket	28	171HD	$122.00
AB179R-58-1	1-1/2"H x 2"W x 14"L For 5/8" to 1" Reveal - Single - Angle Bracket	28	171HD	$162.00

Armature Bolts

Model	Dimensions	Description	List Price
Compatible with: 8310, 8310-IQ, DE8310, EW8310, 8371, 8380			
ARMB155	2-1/8" (55mm)	For doors 1-3/4"-2-1/4" (44-57mm) thick	$8.00
ARMB170	2-3/4" (70mm)	For doors 2-1/4"-2-3/4" (57-70mm) thick	$8.00
ARMB180	3-1/8" (80mm)	For doors 2-1/2"-3" (70-76mm) thick	$8.00
Compatible with: 8320, 8320-IQ, 8372			
ARMB255	2-1/8" (55mm)	For doors 1-3/4"-2-1/4" (44-57mm) thick	$13.00
ARMB270	2-3/4" (70mm)	For doors 2-1/4"-2-3/4" (57-70mm) thick	$13.00
ARMB280	3-1/8" (80mm)	For doors 2-1/2"-3" (70-76mm) thick	$13.00

Armature Plates

Model	Dimensions	Finish	Compatible with	List Price
AP01	3/8" (9.5mm)	Steel	8310, 8320, 8380	$62.00
AP02	5/8" (16mm)	Steel	8310, 8320, 8380	$62.00
AP03	3/8" (9.5mm)	Steel	8360, 8371, 8372	$62.00
AP04	5/16" (8mm)	Steel	8365, 8375	$55.00
AP20	3/8" (9.5mm)	Steel	8310xDSS, 8320xDSS	$97.00
AP21	5/8" (16mm)	Steel	8310xDSS, 8320xDSS	$97.00
AP03D	3/8" (9.5mm)	Steel	8371xDSS, 8372xDSS	$97.00

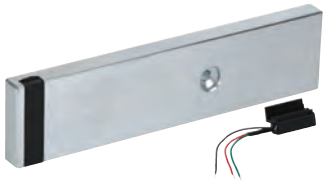

DSS Retrofit Kits

If a door status sensor is desired after magnet has been installed, it can easily be added on site.

- Kit includes both Brushed Anodized Aluminum (28) and Brushed Anodized Dark Bronze (40) cover plate screws.

Model	Description	Finish	Compatible with	List Price
DSR01	3/8" (9.5mm)	Steel	8310	$122.00
DSR02	5/8" (16mm) Standard	Steel	8310	$133.00
DSR03	3/8" (9.5mm)	Steel	8320	$242.00
DSR04	5/8"(16mm) Standard	Steel	8320	$267.00

Armature Plate Holders

- Available in Brushed Anodized Aluminum (28) or Brushed Anodized Dark Bronze (40). Please specify when ordering.

Model	Description	Finish	Compatible with	List Price
AH10	8310 armature plate holder	28/40	8310	$86.00
AH15	8310xDSS armature plate holder	28/40	8310xDSS	$34.00
AH20	8320 armature plate holder	28/40	8320	$170.00
AH25	8320xDSS armature plate holder	28/40	8320xDSS	$67.00
AH71	8371 armature plate holder	28/40	8371	$86.00
AH72	8372 armature plate holder	28/40	8372	$170.00
AH75	8375 armature plate holder	28/40	8375	$86.00

RCI Electromagnetic Locks Accessories

Conduit Mounting Bracket

Used anywhere surface-mounted conduit is required to run wires to the face of the magnetic lock.

Model	Dimensions	Finish	Compatible with	List Price
CMB108	1"D x 2-11/64"H x 10-9/16"L	28	8310	$75.00

Filler Bars/Filler Plates

For frame stops narrower than 2" (51mm).
- Available in Brushed Anodized Aluminum (28) or Brushed Anodized Dark Bronze (40). Please specify when ordering.

Model	Dimensions	Finish	Compatible with	List Price
FB-01	1/4"H x 3/4"W x 10-1/2"L	28/40	8310	$34.00
FB-02	3/8"H x 3/4"W x 10-1/2"L	28/40	8310	$36.00
FB-03	1/2"H x 3/4"W x 10-1/2"L	28/40	8310	$38.00
FB-04	5/8"H x 3/4"W x 10-1/2"L	28/40	8310	$40.00
FB-05	1/2"H x 5/8"W x 10-1/2"L	28/40	8310	$38.00
FB-20	1/4"H x 3/4"W x 21"L	28/40	8320	$62.00
FB-21	3/8"H x 3/4"W x 21"L	28/40	8320	$65.00
FB-22	1/2"H x 3/4"W x 21"L	28/40	8320	$67.00
FB-23	5/8"H x 3/4"W x 21"L	28/40	8320	$70.00
FB-24	1/2"H x 5/8"W x 21"L	28/40	8320	$67.00
FB-710	1/4"H x 3/4"W x 9-3/8"L	28/40	8371	$34.00
FB-711	3/8"H x 3/4"W x 9-3/8"L	28/40	8371	$36.00
FB-712	1/2"H x 3/4"W x 9-3/8"L	28/40	8371	$38.00
FB-713	5/8"H x 3/4"W x 9-3/8"L	28/40	8371	$40.00
FB-720	1/4"H x 3/4"W x 18-3/4"L	28/40	8372	$52.00
FB-721	3/8"H x 3/4"W x 18-3/4"L	28/40	8372	$54.00
FB-722	1/2"H x 3/4"W x 18-3/4"L	28/40	8372	$56.00
FB-723	5/8"H x 3/4"W x 18-3/4"L	28/40	8372	$60.00
FP178-12	1/2"H x 1-1/4"W x 14"L Single Filler Plate	28	171HD	$108.00
FP178-58	5/8"H x 1-1/4"W x 14"L Single Filler Plate	28	171HD	$108.00

Post Bracket

Used to mount armature plate to sliding gate.

Model	Dimensions	Finish	Compatible with	List Price
PB-80	3-1/2"H x 2-1/2"W x 8-7/8"L	28	8380	$88.00

Glass Door Brackets

Required for glass doors without mounting rails.

Model	Dimensions	Finish	Compatible with	List Price
GB8112	1/2" (13mm)	32D	8310	$174.00
GB8134	3/4" (19mm)	32D	8310	$345.00
GB8212	1/2" (13mm)	32D	8320	$174.00
GB8234	3/4" (19mm)	32D	8320	$345.00
GB7112	1/2" (13mm)	32D	8371	$152.00
GB7134	3/4" (19mm)	32D	8371	$174.00
GB7212	1/2" (13mm)	32D	8372	$339.00
GB7234	3/4" (19mm)	32D	8372	$174.00
GB7512	1/2" (13mm)	32D	8375	$345.00
GB7534	3/4" (19mm)	32D	8375	$152.00

L Brackets

Required when there is no space on the header to mount the magnetic lock.
Magnet mounts on bracket and bracket mounts on vertical face of frame.
- Available in Brushed Anodized Aluminum (28) or Brushed Anodized Dark Bronze (40). Please specify when ordering.

Model	Dimensions	Finish	Compatible with	List Price
LB-10	2-1/2"H x 2"W x 10-1/2"L	28/40	8310	$86.00
LB-20	2-1/2"H x 2"W x 21"L	28/40	8320	$170.00

RCI Electromagnetic Locks Accessories

Spacers

For aluminum blade stop frames. Used to lower the magnet to align with armature plate.

- Available in Brushed Anodized Aluminum (28) or Brushed Anodized Dark Bronze (40). Please specify when ordering.

Model	Dimensions	Finish	Compatible with	List Price
SP-01	1/4"H x 1-1/2"W x 10-1/2"L	28/40	8310	$34.00
SP-02	3/8"H x 1-1/2"W x 10-1/2"L	28/40	8310	$36.00
SP-03	1/2"H x 1-1/2"W x 10-1/2"L	28/40	8310	$38.00
SP-04	5/8"H x 1-1/2"W x 10-1/2"L	28/40	8310	$40.00
SP-20	1/4"H x 1-1/2"W x 21"L	28/40	8320	$62.00
SP-21	3/8"H x 1-1/2"W x 21"L	28/40	8320	$65.00
SP-22	1/2"H x 1-1/2"W x 21"L	28/40	8320	$67.00
SP-23	5/8"H x 1-1/2"W x 21"L	28/40	8320	$70.00
SP-710	1/4"H x 1"W x 9-3/8"L	28/40	8371	$34.00
SP-711	3/8"H x 1"W x 9-3/8"L	28/40	8371	$36.00
SP-712	1/2"H x 1"W x 9-3/8"L	28/40	8371	$38.00
SP-713	5/8"H x 1"W x 9-3/8"L	28/40	8371	$40.00
SP-720	1/4"H x 1"W x 18-3/4"L	28/40	8372	$52.00
SP-721	3/8"H x 1"W x 18-3/4"L	28/40	8372	$54.00
SP-722	1/2"H x 1"W x 18-3/4"L	28/40	8372	$56.00
SP-723	5/8"H x 1"W x 18-3/4"L	28/40	8372	$60.00
SP-75	1/4"H x 13/16"W x 6-9/16"L	28/40	8375	$33.00
SPDE01	DE8310 Spacer 1/4"x2-7/8"x10-13/16"	28/40		$34.00
SPDE02	DE8310 Spacer 3/8"x2-7/8"x10-13/16"	28/40		$36.00
SPDE03	DE8310 Spacer 1/2"x2-7/8"x10-13/16"	28/40		$38.00
SPDE04	DE8310 Spacer 5/8"x2-7/8"x10-13/16"	28/40		$40.00

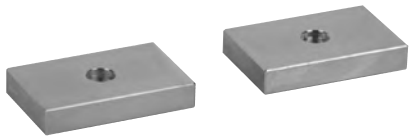

Split Armature Plates

Allow use of single magnet lock with pair of doors.

Model	Dimensions	Finish	Compatible with	List Price
SA138	3/8" (9.5mm)	Steel	8310	$81.00
SA158	5/8" (16mm)	Steel	8310	$81.00
SA75	5/16" (8mm)	Steel	8375	$70.00

Top Jamb "Z" Bracket

Allows for horizontal adjustment of armature plate. Mounted on pull side of the door.

- Available in Brushed Anodized Aluminum (28) or Brushed Anodized Dark Bronze (40). Please specify when ordering.

Model	Description	Finish	Compatible with	List Price
TJ10	8310 Z bracket kit	28/40	8310	$152.00
TJ20	8320 Z bracket kit	28/40	8320	$303.00
TJ71	8371 Z bracket kit	28/40	8371	$152.00
TJ72	8372 Z bracket kit	28/40	8372	$303.00
TJ75	8375 Z bracket kit	28/40	8375	$110.00
TJ80	8380 Z bracket kit	28/40	8380	$119.00
TJDE108	DE8310 bracket kit For inswing applications.	28	DE8310	$250.00

Hardware Packs

Model	Description	Compatible with	List Price
HK8310	Includes: Allen wrench, metal sleeve, armature bolt, sexnut, bolt, steel washers, rubber washers, flat head screws, pan head screws, plugs, TEK screws.	8310, 8320 (Buy 2 to make one 8320 Hardware kit)	$20.00
HK8371	Includes: Allen wrench, metal sleeve, armature bolt, sexnut, bolt, steel washers, rubber washers, flat head screws, pan head screws, plugs, TEK screws.	8310	$20.00
HK8375	Includes Allen wrench, armature bolt, steel washers, rubber washers, TEK screws, round head screws, button head sexnut.	8375	$20.00
HK83809	8380 Hardware Pack		$20.00
HK83608	8360 Hardware Pack		$20.00
HK83658	8365 Hardware Pack		$20.00

RCI Electromagnetic Locks Building Code Signs

BC1 Series
Building Code Signs

11"W x 10"H (28cm x 25cm)
- Available in English, French and Spanish. Please specify when ordering.

Model	Description	List Price
BC1P	15 Seconds, printed on clear Plexiglass	$64.00
BC1M	15 Seconds, printed on clear Mylar	$40.00
BC1MW	15 Seconds, printed on white Mylar	$40.00
BC1T	15 Seconds, red vinyl transfer letters	$53.00
BC1M-30	30 Seconds, printed on clear Mylar	$53.00

BC2 Series
Building Code Signs

13"W x 4"H (33cm x 10cm)
- Available in English, French and Spanish. Please specify when ordering.

Model	Description	List Price
BC2P	Printed on clear Plexiglass	$53.00
BC2M	Printed on clear Mylar	$14.00
BC2MW	Printed on white Mylar	$14.00
BC2T	Red vinyl transfer letters	$31.00

BCDE Series
Building Code Signs

11"W x 10"H (28cm x 25cm)
- Available in English, French and Spanish. Please specify when ordering.

Model	Description	List Price
BCDEP	15 Seconds, printed on clear Plexiglass	$70.00
BCDEM	15 Seconds, printed on clear Mylar	$70.00
BCDEMW	15 Seconds, printed on white Mylar	$70.00
BCDET	15 Seconds, red vinyl transfer letters	$70.00
BCDEM-30	30 Seconds, printed on clear Mylar	$70.00

BC3 Series
Building Code Signs

14"W x 12"H (36cm x 30.5cm)
- Available in English, French and Spanish. Please specify when ordering.

Model	Description	List Price
BC3P	Printed on clear Plexiglass	$64.00
BC3M	Printed on clear Mylar	$66.00
BC3MW	Printed on white Mylar	$72.00
BC3T	Red vinyl transfer letters	$53.00

Electric Strikes

RCI Electric Strikes

0 Series
0161 3/4" Semi-Mortise Rim Strikes

Semi-mortise rim strike designed for use with Pullman latch rim exit devices.
1-3/4"W x 9"H x1-5/8"D (45mm x 229mm x 41mm)

0161 for Rim Exit Devices		List Price
0161-05 x 32D	0161 12VAC/DC x 32D	$307.00
0161-08 x 32D	0161 24VAC/DC x 32D	$307.00

How To Order

0161	-		x	32D

05 –12VAC/VDC
08 –24VAC/VDC
Voltage

Example: **0161 - 05 x 32D**

0 Series
0162 3/4" Rim Strikes

Completely surface-mounted rim strike designed for use with Pullman latch rim exit devices.
1-3/4"W x 9"H x 3/4"D (45mm x 229mm x 20mm)

0162 for Rim Exit Devices		List Price
0162 x 32D	0162 12 to 24VAC & 12 or 24VDC x 32D	$503.00
0162LM x 32D	0162 12 to 24VAC & 12 or 24VDC with Latch Monitoring x 32D	$529.00
F0162	Fire Rated 0162 12 to 24VAC & 12 or 24VDC x 32D	$617.00
F0162LM x 32D	Fire Rated 0162 12 to 24VAC & 12 or 24VDC with Latch Monitoring x 32D	$643.00

How To Order

Options
F –Fire-Rated

	0162		x	32D

LM –Latch Monitor
Options

Example: **F0162LM x 32D**

RCI Electric Strikes

0 Series
0163 1/2" Solenoid Rim Strikes

Slim, adjustable design ideal for tight-fitting installations.
Designed for use with Pullman latch rim exit devices.
1-3/4"W x 9"H x 1/2"D (45mm x 229mm x 13mm)

0163 for Rim Exit Devices		List Price
0163 x 32D	0163 1/2" Rim Strike 11-16VAC, 12VAC/VDC, or 24VAC/VDC x 32D	$498.00
0163LM x 32D	0163 1/2" Rim Strike 11-16VAC, 12VAC/VDC, or 24VAC/VDC with Latch Monitoring x 32D	$523.00

How To Order

0163		x	32D
	LM	–Latch Monitor	

Example: **0163LM x 32D**

0 Series
0563 1/2" (micro-motor) Rim Strikes

Slim, adjustable design ideal for tight-fitting installations.
Designed for use with Pullman latch rim exit devices.
1-3/4"W x 9"H x 1/2"D (45mm x 229mm x 13mm)

0563 for Rim Exit Devices		List Price
0563 x 32D	0563 1/2" Rim Strike 12-24 VDC x 32D	$490.00
0563LM x 32D	0563 1/2" Rim Strike 12-24 VDC with Latch Monitoring x 32D	$564.00

How To Order

0563		x	32D
	LM	–Latch Monitor	
		Options	

Example: **0563LM x 32D**

RCI Electric Strikes

F1 Series

F1114 Centerline Strikes

Features stainless steel faceplate with square corners ideal for hollow metal frames.
Faceplate: 1-1/4"W x 4-7/8"H (32mm x 124mm)
Insert Depth: 1-3/4" (45mm)

F1114 for ANSI Centerline Latch Entry (3/4" Latch Projection)		List Price
F1114-01 x 32D	Fail Locked, Fire Labeled 11-16VAC x 32D	$461.00
F1114-05 x 32D	Fail Locked, Fire Labeled 12VAC/DC x 32D	$461.00
F1114-08 x 32D	Fail Locked, Fire Labeled 24VAC/DC x 32D	$461.00

F1 Series

F1119 Centerline Strikes

Features stainless steel faceplate with square corners ideal for aluminum and wood frames.
Faceplate: 1-3/8"W x 9"H (34mm x 229mm)
Insert Depth: 1-3/4"D (45mm)

F1119 for ANSI Centerline Latch Entry (3/4" Latch Projection)		List Price
F1119-01 x 32D	Fail Locked, Fire Labeled 11-16VAC x 32D	$511.00
F1119-05 x 32D	Fail Locked, Fire Labeled 12VAC/DC x 32D	$511.00
F1119-08 x 32D	Fail Locked, Fire Labeled 24VAC/DC x 32D	$511.00

How To Order

		14				
		19				
F1	1		-		x	32D
				01		
				05		
				08		

Faceplate
14 – 1-1/4"W x 4-7/8"H (32mm x 124mm), ANSI Square Corner
19 – 1-3/8"W x 9"H (34mm x 229mm), Square Corner

01 – 11-16VAC
05 – 12VAC/VDC
08 – 24VAC/VDC

Voltage

Example: **F1119-01 x 32D**

RCI Electric Strikes

2 Series
F2164/2364
All-In-One Strikes

Versatile design features adjustable deadbolt keeper and deadlatch ramp allowing it to work with most locks.
Faceplate: 1-1/4"W x 4-7/8"H (32mm x 124mm)
Insert Depth: 1-3/4"D (45mm)

F2 Series - For Fire Rated Offset And Centerline Mortise Latch Entry		List Price
F2164 x 32D	Fail Locked, Fire Labeled 12 to 24VAC & 12 or 24VDC x 32D	$564.00

2 Series - Offset & Centerline Mortise Latch Entry		List Price
2364 x 32D	Fail Unlocked, 12 or 24VDC x 32D	$564.00

How To Order

Options

F	–Fire-Rated[4]				
	2		64	x	32D
		1	–Fail-Secure		
		3	–Fail-Safe		
		Mode			

Example: **F2164 x 32D**

[4]Available in fail-secure mode only.

RCI Electric Strikes

4104
4304

4105
4305

4107
4307

4108
4308

4114
4314

4119
4319

F4104

F4114

How To Order

Voltage

Fail-Secure	11-16VAC–	01
	12VAC/VDC–	05
	24VAC/VDC–	08
Fail-Safe	12VDC–	06
	24VDC	09

Options

Fire-Rated[4]: F

	4			-	x	32D

Mode

Fail-Secure	1	04 – 1-1/4"W x 4-7/8"H (32mm x 124mm), ANSI Radius Corner
Fail-Safe	3	05 – 1-1/8"W x 5-7/8"H (29mm x 150mm), Radius Corner
		07 – 1-1/4"W x 6-7/8"H (32mm x 175mm), Radius Corner
		08 – 1-7/16"W x 7-15/16"(37mm x 202mm), Radius Corner
		14 – 1-1/4"W x 4-7/8"H (32mm x 124mm), ANSI Square Corners
		19 – 1-3/8"W x 9"H (34mm x 228mm), Square Corners

Faceplate

Example: **F4104-05 x 32D**

4 Series

Centerline Strikes

Accommodates 3/4" (19mm) latch projection. Various faceplate options available to accommodate most frame types.
Insert Depth: 1-1/2"D (38mm)

4 Series - 4104 & 4304 for ANSI Centerline Latch Entry (3/4" Latch Projection)		List Price
4104-01 x 32D	4104 11-16VAC Fail Locked x 32D	$160.00
4104-05 x 32D	4104 12VAC/DC Fail Locked x 32D	$160.00
4104-08 x 32D	4104 24VAC/DC Fail Locked x 32D	$160.00
4304-06 x 32D	4304 12VDC Fail Unlocked x 32D	$173.00
4304-09 x 32D	4304 24VDC Fail Unlocked x 32D	$173.00

4 Series - 4114 & 4314 for ANSI Centerline Latch Entry (3/4" Latch Projection)		List Price
4114-01 x 32D	4114 11-16VAC Fail Locked x 32D	$160.00
4114-05 x 32D	4114 12VAC/DC Fail Locked x 32D	$160.00
4114-08 x 32D	4114 24VAC/DC Fail Locked x 32D	$160.00
4314-06 x 32D	4314 12VDC Fail Unlocked x 32D	$173.00
4314-09 x 32D	4314 24VDC Fail Unlocked x 32D	$173.00

4 Series - 4105 & 4305 for Centerline Latch Entry (3/4" Latch Projection)		List Price
4105-01 x 32D	4105 11-16VAC Fail Locked x 32D	$165.00
4105-05 x 32D	4105 12VAC/DC Fail Locked x 32D	$165.00
4105-08 x 32D	4105 24VAC/DC Fail Locked x 32D	$165.00
4305-06 x 32D	4305 12VDC Fail Unlocked x 32D	$180.00
4305-09 x 32D	4305 24VDC Fail Unlocked x 32D	$180.00

4 Series - 4107 & 4307 for Centerline Latch Entry (3/4" Latch Projection)		List Price
4107-01 x 32D	4107 11-16VAC Fail Locked x 32D	$165.00
4107-05 x 32D	4107 12VAC/DC Fail Locked x 32D	$165.00
4107-08 x 32D	4107 24VAC/DC Fail Locked x 32D	$165.00
4307-06 x 32D	4307 12VDC Fail Unlocked x 32D	$180.00
4307-09 x 32D	4307 24VDC Fail Unlocked x 32D	$180.00

4 Series - 4108 & 4308 for Centerline Latch Entry (3/4" Latch Projection)		List Price
4108-01 x 32D	4108 11-16VAC Fail Locked x 32D	$173.00
4108-05 x 32D	4108 12VAC/DC Fail Locked x 32D	$173.00
4108-08 x 32D	4108 24VAC/DC Fail Locked x 32D	$173.00
4308-06 x 32D	4308 12VDC Fail Unlocked x 32D	$185.00
4308-09 x 32D	4308 24VDC Fail Unlocked x 32D	$185.00

4 Series - 4119 & 4319 for Centerline Latch Entry (3/4" Latch Projection)		List Price
4119-01 x 32D	4119 11-16VAC Fail Locked x 32D	$208.00
4119-05 x 32D	4119 12VAC/DC Fail Locked x 32D	$208.00
4119-08 x 32D	4119 24VAC/DC Fail Locked x 32D	$208.00
4319-06 x 32D	4319 12VDC Fail Unlocked x 32D	$221.00
4319-09 x 32D	4319 24VDC Fail Unlocked x 32D	$221.00

F4 Series - F4104 Fire Rated ANSI Centerline Latch Entry (3/4" Latch Projection)		List Price
F4104-05 x 32D	12VAC/DC Fail Locked, Fire Labeled x 32D	$387.00
F4104-08 x 32D	24VAC/DC Fail Locked, Fire Labeled x 32D	$387.00

F4 Series - F4114 Fire Rated ANSI Centerline Latch Entry (3/4" Latch Projection)		List Price
F4114-05 x 32D	12VAC/DC Fail Locked, Fire Labeled x 32D	$387.00
F4114-08 x 32D	24VAC/DC Fail Locked, Fire Labeled x 32D	$387.00

RCI Electric Strikes

6 Series
Centerline Strikes

Two profiles available to accommodate different latch projections.
Various faceplate options available to accommodate most frame types.
Standard Insert Depth: 1-3/16"D (30mm)
Low Profile Insert Depth: 1-1/16" (27mm)

6 Series - Universal - Includes 3 Faceplates		List Price
S65U x 32D	Field Selectable, 12 to 24 VAC & 12 or 24VDC x 32D	$226.00
S65ULMKM x 32D	Field Selectable, 12 to 24 VAC & 12 or 24VDC x 32D	$277.00
L65U x 32D	Field Selectable, 12 to 24 VAC & 12 or 24VDC x 32D	$226.00
L65ULMKM x 32D	Field Selectable, 12 to 24 VAC & 12 or 24VDC x 32D	$277.00

6 Series - S6504 & L6504 for ANSI Round Corner Centerline Latch Projection		List Price
S6504 x 32D	Field Selectable 12 to 24 VAC & 12 or 24VDC x 32D	$195.00
S6504LMKM x 32D	Field Selectable 12 to 24 VAC & 12 or 24VDC x 32D	$250.00
L6504 x 32D	Field Selectable 12 to 24 VAC & 12 or 24VDC x 32D	$195.00
L6504LMKM x 32D	Field Selectable 12 to 24 VAC & 12 or 24VDC x 32D	$250.00

6 Series - S6514 & L6514 for ANSI Square Corner Centerline Latch Projection		List Price
S6514 x 32D	Field Selectable 12 to 24 VAC & 12 or 24VDC x 32D	$195.00
S6514LMKM x 32D	Field Selectable 12 to 24 VAC & 12 or 24VDC x 32D	$250.00
L6514 x 32D	Field Selectable 12 to 24 VAC & 12 or 24VDC x 32D	$195.00
L6514LMKM x 32D	Field Selectable 12 to 24 VAC & 12 or 24VDC x 32D	$250.00

6 Series - S6505 & L6505 for Centerline Latch Projection		List Price
S6505 x 32D	Field Selectable 12 to 24 VAC & 12 or 24VDC x 32D	$201.00
S6505LMKM x 32D	Field Selectable 12 to 24 VAC & 12 or 24VDC x 32D	$255.00
L6505 x 32D	Field Selectable 12 to 24 VAC & 12 or 24VDC x 32D	$201.00
L6505LMKM x 32D	Field Selectable 12 to 24 VAC & 12 or 24VDC x 32D	$255.00

6 Series - S6507 & L6507 for Centerline Latch Projection		List Price
S6507 x 32D	Field Selectable 12 to 24 VAC & 12 or 24VDC x 32D	$201.00
S6507LMKM x 32D	Field Selectable 12 to 24 VAC & 12 or 24VDC x 32D	$255.00
L6507 x 32D	Field Selectable 12 to 24 VAC & 12 or 24VDC x 32D	$201.00
L6507LMKM x 32D	Field Selectable 12 to 24 VAC & 12 or 24VDC x 32D	$255.00

S/L6504 S/L6505 S/L6507 S/L6508

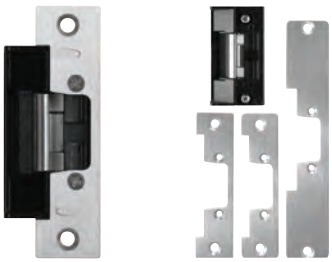

S/L6514 S/L65U

How To Order

Options

Latch And Keeper Monitor– LMKM

65 x 32D

Standard– S

Low Profile– L

Profile

04	–1-1/4"W x 4-7/8"H (32mm x 124mm), ANSI Radius Corners
05	–1-1/8"W x 5-7/8"H (29mm x 150mm), Radius Corners
07	–1-1/4"W x 6-7/8"H (32mm x 175mm), Radius Corners
08	–1-7/16"W x 7-15/16"(37mm x 202mm), Radius Corners
14	–1-1/4"W x 4-7/8"H (32mm x 124mm), ANSI Square Corners
U	–Universal, Includes 3 Faceplates (04, 08 & 14)

Faceplate

Example: **L6507LMKM x 32D**

6 Series - S6508 & L6508 for Centerline Latch Projection		List Price
S6508 x 32D	Field Selectable 12 to 24 VAC & 12 or 24VDC x 3	$209.00
S6508LMKM x 32D	Field Selectable 12 to 24 VAC & 12 or 24VDC x 32D	$260.00
L6508 x 32D	Field Selectable 12 to 24 VAC & 12 or 24VDC x 32D	$209.00
L6508LMKM x 32D	Field Selectable 12 to 24 VAC & 12 or 24VDC x 32D	$260.00

RCI Electric Strikes

7104
7304

7105
7305

7107
7307

7108
7308

7114
7314

7119
7319

How To Order

7			-		x	32D

Mode

Fail-Secure–1
Fail-Safe–3

Voltage

Fail-Secure
- 11-16VAC– 01
- 12VDC– 05D
- 24VAC– 07
- 24VDC– 08D

Fail-Safe
- 12VDC– 06
- 24VDC– 09

Faceplate

- 04 –1-1/4"W x 4-7/8"H (32mm x 124mm), ANSI radius corners
- 05 –1-1/8"W x 5-7/8"H (29mm x 150mm), radius corners
- 07 –1-1/4"W x 6-7/8"H (32mm x 175mm), radius corners
- 08 –1-7/16"W x 7-15/16"(37mm x 202mm), radius corners
- 14 –1-1/4"W x 4-7/8"H (32mm x 124mm), ANSI square corners
- 19 –1-3/8"W x 9"H (34mm x 229mm), square corners

Example: **7104-05D x 32D**

7 Series

Centerline Strikes

Accommodates 5/8" (16mm) latch projection. Various faceplate options available to accommodate most frame types.
Insert Depth: 1-1/2"D (38mm)

7 Series - 7114 & 7314 for ANSI Centerline Latch Entry (5/8" Latch Projection)		List Price
7114-01 x 32D	7114 Fail Locked 11-16VAC x 32D	$152.00
7114-05D x 32D	7114 Fail Locked 12VDC x 32D	$152.00
7114-07 x 32D	7114 Fail Locked 24VAC x 32D	$152.00
7114-08D x 32D	7114 Fail Locked 24VDC x 32D	$152.00
7314-06 x 32D	7314 Fail Unlocked 12VDC x 32D	$161.00
7314-09 x 32D	7314 Fail Unlocked 24VDC x 32D	$161.00

7 Series - 7104 & 7304 for ANSI Centerline Latch Entry (5/8" Latch Projection)		List Price
7104-01 x 32D	7104 Fail Locked 11-16VAC x 32D	$152.00
7104-05D x 32D	7104 Fail Locked 12VDC x 32D	$152.00
7104-07 x 32D	7104 Fail Locked 24VAC x 32D	$152.00
7104-08D x 32D	7104 Fail Locked 24VDC x 32D	$152.00
7304-06 x 32D	7304 Fail Unlocked 12VDC x 32D	$161.00
7304-09 x 32D	7304 Fail Unlocked 24VDC x 32D	$161.00

7 Series - 7105 & 7305 for Centerline Latch Entry (5/8" Latch Projection)		List Price
7105-01 x 32D	7105 Fail Locked 11-16VAC x 32D	$158.00
7105-05D x 32D	7105 Fail Locked 12VDC x 32D	$158.00
7105-07 x 32D	7105 Fail Locked 24VAC x 32D	$158.00
7105-08D x 32D	7105 Fail Locked 24VDC x 32D	$158.00
7305-06 x 32D	7305 Fail Unlocked 12VDC x 32D	$166.00
7305-09 x 32D	7305 Fail Unlocked 24VDC x 32D	$166.00

7 Series - 7107 & 7307 for Centerline Latch Entry (5/8" Latch Projection)		List Price
7107-01 x 32D	7107 Fail Locked 11-16VAC x 32D	$158.00
7107-05D x 32D	7107 Fail Locked 12VDC x 32D	$158.00
7107-07 x 32D	7107 Fail Locked 24VAC x 32D	$158.00
7107-08D x 32D	7107 Fail Locked 24VDC x 32D	$158.00
7307-06 x 32D	7307 Fail Unlocked 12VDC x 32D	$166.00
7307-09 x 32D	7307 Fail Unlocked 24VDC x 32D	$166.00

7 Series - 7108 & 7308 for Centerline Latch Entry (5/8" Latch Projection)		List Price
7108-01 x 32D	7108 Fail Locked 11-16VAC x 32D	$164.00
7108-05D x 32D	7108 Fail Locked 12VDC x 32D	$164.00
7108-07 x 32D	7108 Fail Locked 24VAC x 32D	$164.00
7108-08D x 32D	7108 Fail Locked 24VDC x 32D	$164.00
7308-06 x 32D	7308 Fail Unlocked 12VDC x 32D	$174.00
7308-09 x 32D	7308 Fail Unlocked 24VDC x 32D	$174.00

7 Series - 7119 & 7319 for Centerline Latch Entry (5/8" Latch Projection)		List Price
7119-01 x 32D	7119 Fail Locked 11-16VAC x 32D	$201.00
7119-05D x 32D	7119 Fail Locked 12VDC x 32D	$201.00
7119-07 x 32D	7119 Fail Locked 24VAC x 32D	$201.00
7119-08D x 32D	7119 Fail Locked 24VDC x 32D	$201.00
7319-06 x 32D	7319 Fail Unlocked 12VDC 32D	$209.00
7319-09 x 32D	7319 Fail Unlocked 24VDC 32D	$209.00

RCI Electric Strikes

12C Compact Strike

A versatile strike suitable for all types of door frames.
1-13/16"W x 2-3/4"H x 1-1/8"D (46mm x 70mm x 28mm)

12C Compact Strike		List Price
12C x 26D	Compact electric strike	$199.00

How To Order

12C	x	26D

VR165 Vertical Rod Strike

Accommodates 5/8" (16mm) roller latch. Designed for use with vertical rod exit devices with roller latch.

VR165 Vertical Rod Strike		List Price
VR165	Designed for use with glass door exit devices having a roller latch	$460.00

How To Order

VR165	x	32D

Example: **VR165 x 32D**

VR166 Vertical Rod Strike

Simple locking solution for surface vertical rod exit devices having a Pullman style latch.

VR166 Vertical Rod Strike		List Price
VR166	Vertical rod strike	$325.00
VR166LMKM	Vertical rod strike with Latch & Keeper Monitor	$360.00

How To Order

VR166		x	32D
	LMKM	– Latch and Keeper Monitor	

Example: **VR166LMKM x 32D**

RCI Electric Strikes

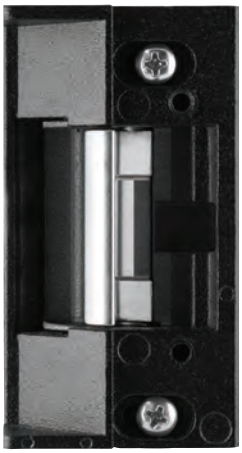

4 Series
Modular Strike Inserts

Includes Lip Bracket & Hardware Pack

How To Order

		Voltage		
Fail-Secure		11-16VAC–	01	
		12VAC/VDC–	05	
		24VAC/VDC–	08	
Fail-Safe		12VDC–	06	
		24VDC–	09	
A	4		-	
		1	–Fail-Secure	
		3	–Fail-Safe	
		Mode		

Example: **A41-05**

6 Series
Modular Strike Inserts

Includes Lip Bracket & Hardware Pack

How To Order

			LMKM	–Latch And Keeper Monitor
A		65		
	S		–Standard	
	L		–Low Profile	
		Profile		

Example: **AL65LMKM**

7 Series
Modular Strike Inserts

Includes Lip Bracket & Hardware Pack

How To Order

		Voltage		
Fail-Secure		11-16VAC–	01	
		12VDG–	05D	
		24VAC–	07	
		24VDC–	08D	
Fail-Safe		12VDC–	06	
		24VDC–	09	
A	7		-	
		1	–Fail-Secure	
		3	–Fail-Safe	
		Mode		

Example: **A71-05D**

Model	Description	List Price
A41	41 Series without Faceplate	$141.00
A43	43 Series without Faceplate	$152.00
AL65	Low Profile Strike, 12 to 24 VAC & 12/24VDC x32D	$177.00
AS65	Standard Profile Strike, 12 to 24 VAC & 12/24VDC x32D	$177.00
AL65-LMKM	Low Profile LMKM Strike, 12 to 24 VAC & 12/24VDC x32D	$229.00
AS65-LMKM	Standard Profile LMKM Strike, 12 to 24 VAC & 12/24VDC x32D	$229.00
A71	71 Series without Faceplate	$131.00
A73	73 Series without Faceplate	$177.00

RCI Electric Strikes

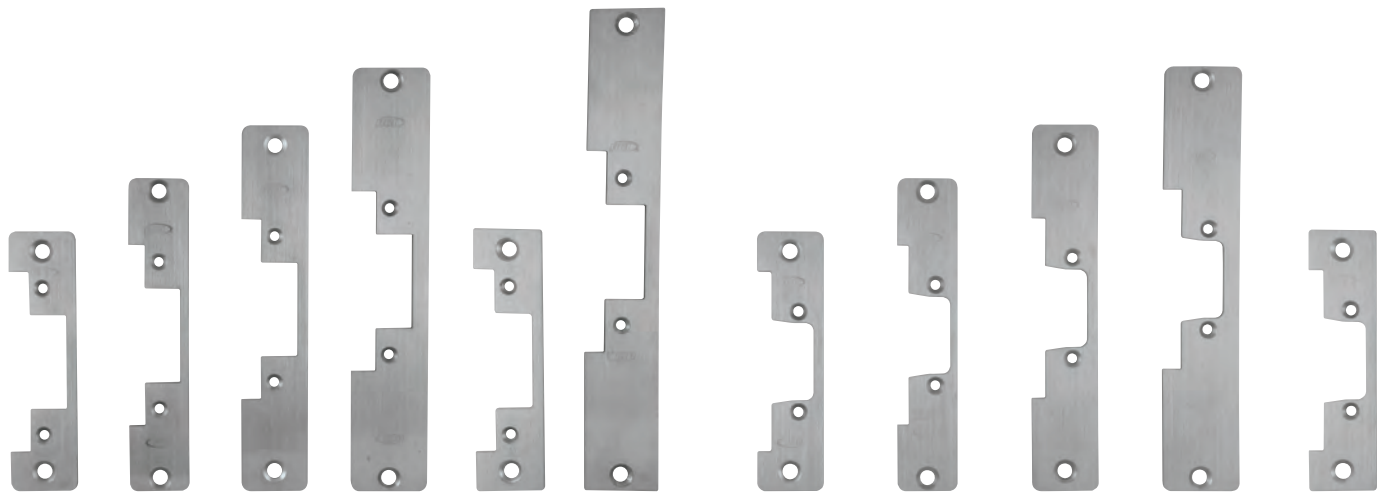

B4704 B4705 B4707 B4708 B4714 B4719 B604 B605 B607 B608 B614

4/7 Series
Modular Strike Faceplates

Model	Description	List Price
B4704-32D	Faceplate Aluminum Frames 1-1/4"x4-7/8"x32D	$23.00
B4714-32D	Faceplate Hollow Metal Frames 1-1/4"x4-7/8"x32D	$23.00
B4705-32D	Faceplate Aluminum Frames 1-1/8"x5-7/8"x32D	$29.00
B4707-32D	Faceplate Aluminum Frames 1-1/4"x6-7/8"x32D	$29.00
B4708-3D	Faceplate aluminum/Wood Frames 1-7/16"x7-15/16"x32D	$34.00
B4719-32D	Faceplate Hollow Metal/Wood Frames 1-3/8"x9"x32D. (Must add 47LIP9B)	$34.00
47LIP9B	Lip Bracket for use with #19 Faceplate	$38.00

6 Series
Modular Strike Faceplates

Model	Description	List Price
B6-04-32D	Faceplate Aluminum/Wood Frames 1-1/4"x4-7/8"x32D	$21.00
B6-14-32D	Faceplate Steel/Wood Frames 1-1/4"x4-7/8"x32D	$21.00
B6-05-32D	Faceplate Aluminum/Wood Frames 1-1/8"x5-7/8"x32D	$27.00
B6-07-32D	Faceplate Aluminum/Wood Frames 1-1/4"x6-7/8"x32D	$27.00
B6-08-32D	Faceplate Aluminum/Wood Frames 1-7/16"x7-15/16"x32D	$32.00

How To Order

Series

	6			–6 Series
	47			–4 & 7 Series
B			-	32D
		04		–1-1/4"W x 4-7/8"H (32mm x 124mm), ANSI Radius Corner
		05		–1-1/8"W x 5-7/8"H (29mm x 150mm), Radius Corners
		07		–1-1/4"W x 6-7/8"H (32mm x 175mm), Radius Corners
		08		–1-7/16"W x 7-15/16"(37mm x 202mm), Radius Corners
		14		–1-1/4"W x 4-7/8"H (32mm x 124mm), ANSI Square Corners
		19		–1-3/8"W x 9"H (34mm x 229mm), Square Corners[1]

Faceplate

Example: **B4707-32D**

[1]Only available with 4 & 7 series

RCI Electric Strikes Accessories

Double Door Housing

Ideal for double door applications with no center mullion.
Door housing is mounted on the inactive door

Model	Description	Finish	Compatible with	List Price
0161DDH	Double door housing for	SPC[1]	0161	$168.00
0162DDH	Double door housing for	SPC[1]	0162, 0163, 0563	$168.00

[1]SPC = Silver Powder Coat

Frame Prep Jigs

Aids in cutting of aluminum or metal frames, improving accuracy.

Model	Description	Finish	Compatible with	List Price
4/7JIG	Frame prep jig for ANSI-sized electric strike	Aluminum	4104/4304, 4114/4314, 7104/7304, 7114/7314	$88.00
S6JIG	Standard profile frame prep jig	Aluminum	S6504, S6514	$83.00
L6JIG	Low profile frame prep jig	Aluminum	L6504, L6514	$83.00

Ice Pack

Heat reducer for continuous duty electric strikes.
Operating voltage – 12 to 30VDC.

Model	Description / Dimensions	Compatible with	List Price
ICEPK	Heat reducer for continuous duty electric strikes	0/F1/2/4/6/7 Series	$89.00

Mounting Spacer Kits

Ideal for increasing latch depth.

Model	Description	Compatible with	List Price
0162MSK	1/16" mounting spacer for additional latch engagement	0162	$11.00

Latch Guards

Added tamper-resistance for perimeter doors.
Helps guard the latch from a prying attack.
Designed with radius cut for easy installation around lockset roses.

Model	Description	Finish	Compatible with	List Price
930-LG	Standard profile latch guard	32D	4/7 Series	$55.00
940-LG	High profile latch guard	32D	F2/6/F1 Series	$59.00

Lip Bracket Extension

Ideal for center-hung doors. Allows electric strike to be installed in frame and protects frame from damage.

Model	Description / Dimensions	Finish	Compatible with	List Price
LEK01	1" Lip extension kit for retrofit	Black	4/7 Series	$69.00
LEK02	2" Lip extension kit for retrofit	Black	4/7 Series	$79.00
LEK03	3" Lip extension kit for retrofit	Black	4/7 Series	$92.00
LEKS601	1" Lip extension kit for retrofit (standard)	Black	S6 Series	$60.00
LEKS602	2" Lip extension kit for retrofit (standard)	Black	S6 Series	$72.00
LEKS603	3" Lip extension kit for retrofit (standard)	Black	S6 Series	$83.00
LEKL601	1" Lip extension kit for retrofit (low profile)	Black	L6 Series	$60.00
LEKL602	2" Lip extension kit for retrofit (low profile)	Black	L6 Series	$72.00
LEKL603	3" Lip extension kit for retrofit (low profile)	Black	L6 Series	$83.00

Weldable Box

Ideal for welding onto surfaces that are not already designed to accommodate an electric strike.
Most commonly used on gates.out.

Model	Description	Finish	Compatible with	List Price
BXES2	Weldable Box	SPC/ Steel	4104/4304, 4114/4314, 7104/7304, 7114/7314	$41.00

RCI Electric Strikes Accessories

Strike Marking Template Kit

Ideal for accurately guiding prepping of the frame for the installation.

Model	Description	Finish	Compatible with	List Price
SMT-01	Strike Marking Template Kit	Aluminum	F2/4/6/7 Series	$55.00

Trim Plates

Ideal for concealing any imperfections caused while prepping the frame cut out.

Model	Description	Finish	Compatible with	List Price
TP-47-5PK	Trim Plate - 5 Pack	Black	4/7 Series	$28.00
TP-L6-5PK	Low profile Trim Plate - 5 Pack	Black	L6 Series	$25.00
TP-S6-5PK	Standard profile Trim Plate - 5 Pack	Black	S6 Series	$25.00

Security Hardware Packs

Model	Description	Compatible with	List Price
SECURHK9	Includes torx screws and bit	4/6/7 Series, F2	$10.00
2SERIESHWK	Includes screws, bit, mounting tabs, allen key, shims, connetor, deadbolt bracket and plug.	2 Series	$50.00
6HK9	6 Series L/S Hardware Pack		$20.00
47HK9	Standard Strike Mounting Hardware		$20.00

2 Series Plug-In Latch Monitor

Latch monitor plug-in kit (2A @ 24VDC).

Model	Description	Compatible with	List Price
F2LM	Plug-in latch monitor kit (2A @ 24VDC). Improved design to accommodate 1/2" - 3/4" latch throw	F2164	$74.00

2 Series Filler Plate

Filler plate (for use when replacing discontinued 2 Series models).

Model	Description	Compatible with	List Price
2FP	Filler plate for use when replacing discontinued 2 Series models	F2164/2364	$18.00

6 Series Lip Bracket & Aluminum Faceplates

Model	Description	Compatible with	List Price
S6504DD	Lip bracket and aluminum faceplate for double doors with astragal (for S6504)	S6504	$60.00
L6504DD	Lip bracket and aluminum faceplate for double doors with astragal (for L6504)	L6504	$60.00
S6507DD	Lip bracket and aluminum faceplate for double doors with astragal (for S6507	S6507	$64.00
L6507DD	Lip bracket and aluminum faceplate for double doors with astragal (for L6507)	L6507	$64.00

Keypads & Readers

RCI Keypads & Readers

5355R 125kHz Proximity Reader & Keypad Combo

Ideal for dual authentication or simple access via PIN or credential applications.
3"W x 4-5/8"H x 3/4"D
(76mm x 117mm x 19mm)

5395R 125kHz Proximity Reader

Compact design ideal for single gang wall-box applications.
3"W x 4-5/8"H x 3/8"D
(76mm x 117mm x 10mm)

6005R 125kHz Mullion Proximity Reader

Slim design ideal for areas with minimal surface space to mount.
1-11/16"W x 3-3/16"H x 11/16"D
(43mm x 80mm x 17mm)

Model	Description	List Price
6005R	125kHz Wiegand Mullion Proximity Reader	$131.00
5395R	125kHz Wiegand Proximity Reader	$152.00
5355R	125kHz Wiegand Proximity Reader & Keypad Combo	$473.00

How To Order

5355R

How To Order

5395R

How To Order

6005R

[1]Max at 12VDC
[2]Using 1326R Proximity Card (Clamshell) with 12VDC at the reader

RCI Keypads & Readers

1326R 125kHz Proximity Clamshell Card

Passive proximity cards and fobs for physical access control.
2-3/16"W x 3-3/8"H x 1/16"D
(56mm x 86mm x 1.5mm)

1386R 125kHz Proximity Printable Card

Passive proximity cards and fobs for physical access control.
2-1/16"W x 3-3/8"H x 1/32"D
(53mm x 86mm x 0.79mm)

1314R 125kHz Proximity Thick Printable Card

Passive proximity cards and fobs for physical access control.
2-1/16"W x 3-3/8"H x 1/16"D
(53mm x 86mm x 1.17mm)

1346R 125kHz Proximity Fob

Passive proximity cards and fobs for physical access control.
1-1/2"W x 1-3/16"H x 1/8"D
(38mm x 30mm x 3.8mm)

Model	Description	List Price
1326R-10	Proximity Card (Clamshell) - 10 Pack	$45.00
1386R-10	Proximity Card (Printable) - 10 Pack	$83.00
1314R-10	Proximity Card (Thick Printable) - 10 Pack	$47.00
1346R-10	Proximity Fob - 10 Pack	$95.00
1326R-25	Proximity Card (Clamshell) - 25 Pack	$111.00
1386R-25	Proximity Card (Printable) - 25 Pack	$202.00
1314R-25	Proximity Card (Thick Printable) - 25 Pack	$113.00
1346R-25	Proximity Fob - 25 Pack	$239.00
1326R-50	Proximity Card (Clamshell) - 50 Pack	$216.00
1386R-50	Proximity Card (Printable) - 50 Pack	$404.00
1314R-50	Proximity Card (Thick Printable) - 50 Pack	$218.00
1346R-50	Proximity Fob - 50 Pack	$468.00

How To Order

	Card Type					**Quantity**
	26 –Clamshell					
	86 –Printable				10	–10 Pack
	14 –Thick Printable				25	–25 Pack
	46 –Fob				50	–50 Pack
13		R	-		-	
				H	–Certain HID®	
				A	–Certain AWID®	
				Supported Data Protocol[1]		

[1]RCI protocol standard, must specify HID® or AWID® if required

RCI Keypads & Readers

9325 Keypads

Single door standalone access control solution for surface-mount applications.
2-3/4"W x 4-1/2"H x 1-5/32"D (70mm x 114mm x 29mm)

Model	Description	List Price
9325i	Indoor Standalone Keypad 12VDC BLK	$166.00
9325e	Outdoor Standalone Keypad 12VDC BLK	$242.00

How To Order

	Type
	i –Interior
	e –Exterior
9325	

RCI Keypads & Readers

9212i Keypad

Single door standalone access control solution for single gang flush mount applications.
For interior use.
2-3/4"W x 4-1/2"H x 1-1/4"D (70mm x 114mm x 32mm)

Model	Description	List Price
9212i x 32D	Indoor Standalone Keypad 12/24VAC or VDC x 32D	$225.00

How To Order

	Type
9212 i	–Interior

9212iLW Illuminated Keypad

Single door standalone access control solution for single gang flush mount applications.
For interior or exterior use.
3-3/8"W x 5-1/8"H x 5/8"D (86mm x 130mm x 16mm)

Model	Description	List Price
9212iLW x 32D	Outdoor Illuminated Standalone Keypad 12/24VAC or VDC x 32D	$411.00

How To Order

	Type
9212 iLW	–Interior or Exterior Illuminated

RCI Keypads & Readers

9320 Easy Read-Prox® Slimline Reader Reader + Stand Alone

One self-contained unit, single-door standalone access control solution for surface or
mullion mount for interior or exterior use.
1-1/2"W x 3-1/16"H x 1/2"D (38mm x 78mm x 12.7mm)

9321 Easy Read-Prox® Slimline Reader Reader + Controller

Two separate components, single-door standalone access control solution for surface or
mullion mount for interior or exterior use.
1-1/2"W x 3-1/16"H x 1/2"D (38mm x 78mm x 12.7mm)

Model	Description	List Price
9320	Easy Read Proximity Slimline Reader 12VDC	$313.00
9321	Easy Read Proximity Slimline Reader/Controller Kit 12VDC	$417.00
9321SPB	Proximity Reader Only	$248.00

How To Order

	Type	
	0	–Reader + Controller (One Self-Contained Unit)
	1	–Reader + Controller (Two Separate Components)
	1SPB	–Reader Only (No Control Board)
932		

RCI Keypads & Readers

9322 Easy Read-Prox® Micro Reader Reader + Stand Alone

One self-contained unit, single door standalone access control solution for flush mount applications for interior or exterior use. 1-3/16"W x 1-7/8"H x 5/16"D (29.5mm x 48mm x 8.5mm)

9323 Easy Read-Prox® Micro Readers Reader + Controller

Two separate components, single door standalone access control solution for flush mount applications for interior or exterior use. 1-3/16"W x 1-7/8"H x 5/16"D (29.5mm x 48mm x 8.5mm)

Model	Description	List Price
9322	Easy Read Proximity Micro Reader 12VDC	$348.00
9323	Easy Read Proximity Micro Reader/Controller Kit 12VDC	$476.00
9323MP	Easy Read Proximity Micro Reader Only	$283.00

How To Order

	Type	
	2	–Reader + Controller (One Self-Contained Unit)
	3	–Reader + Controller (Two Separate Components)
	3MP	–Reader Only (No Control Board)
932		

9 Series Easy Read-Prox® Accessories		List Price
932-10CP	Encoded Card Token Pack, 10 Count	$218.00
932-10KP	Encoded Keyfob Token Pack, 10 Count	$218.00
932-PEC	Enrollment Card+	$20.00
932-10UKP	Unencoded Keyfob Token, 10 Pack	$81.00
932-25UKP	Unencoded Keyfob Token, 25 Pack	$191.00
932-50UKP	Unencoded Keyfob Token, 50 Pack	$364.00
932-10UCP	Unencoded Card Token, 10 Pack	$81.00
932-25UCP	Unencoded Card Token, 25 Pack	$191.00
932-50UCP	Unencoded Card Token, 50 Pack	$364.00
9310RB	Relay Board 12/24VDC - 10 Amp	$61.00

Switches

RCI Switches

906 Handicap Pushbutton

2-3/4"W x 4-1/2"H (70mm x 114mm)

906 Handicap Button		List Price
906-MO x 32D	Momentary	$120.00
906-MA x 32D	Maintained	$120.00
906-TD x 32D	Electronic Time Delay	$184.00

How To Order

		Type				
		BH	–Handicap Symbol			
		B	–Blank			
906	-		-		x	32D
				MO		
	Momentary			MA		
	Maintained			TD		
	Time-Delay					
	Switch Mode					

908 Exit Pushbutton

2-3/4"W x 4-1/2"H (70mm x 114mm)

908 Exit Button		List Price
908-MO x 32D	Momentary Exit MB	$114.00
908-MA x 32D	Maintained Exit MB x 32D	$114.00
908-TD x 32D	Electronic Time Delay Exit MB	$178.00

How To Order

			Type				
Color			E	–"EXIT", English			
Red[1]	R		F	–"EXIT", French			
Green	G		S	–"EXIT", Spanish			
Black	B		B	–Blank			
908	-			-		x	32D
					MO		
		Momentary	–		MA		
		Maintained	–		TD		
		Time-Delay	–				
		Switch Mode					

[1]Standard

RCI Switches

916 Tamper-Resistant Handicap Pushbutton

Standard: 3"W x 4-3/4"H (76mm x 121mm)
Narrow: 1-5/8"W x 4-3/4"H (45mm x 121mm)

916 Tamper-Resistant Handicap Button		List Price
916-MO x 28	Momentary	$130.00
916-MA x 28	Maintained	$130.00
916-TD x 28	Electronic Time Delay	$195.00
916N-MO x 28	Narrow, Momentary	$130.00
916N-MA x 28	Narrow, Maintained	$130.00
916N-TD x 28	Narrow, Electronic Time Delay	$195.00
40 Finish		N/C

How To Order

		Type					**Switch Mode**	
		Handicap Symbol—		BH			MO –Momentary	
							MA –Maintained	
		Blank—		B			TD –Time-Delay	
916		-			-		x	
Narrow-	N			Brushed Anodized Aluminum[1] –				28
Options				Brushed Anodized Dark Bronze –				40
				Faceplate Finish				

[1]Standard

918 Tamper-Resistant Exit Pushbutton

Standard: 3"W x 4-3/4"H (76mm x 121mm)
Narrow: 1-5/8"W x 4-3/4"H (45mm x 121mm)

918 Tamper-Resistant/916N Narrow Tamper-Resistant Exit Buton		List Price
918-MO x 28	Momentary	$125.00
918-MA x 28	Maintained	$125.00
918-TD x 28	Electronic Time Delay	$189.00
918N-MO x 28	Narrow, Momentary	$125.00
918N-MA x 28	Narrow, Maintained	$125.00
918N-TD x 28	Narrow, Electronic Time Delay	$189.00
40 Finish		N/C

How To Order

			Type				**Switch Mode**	
			Red[1]–	R			MO –Momentary	
			Green –	G			MA –Maintained	
							TD –Time-Delay	
918		-			-		x	
Narrow-	N	"EXIT", English –		E		Brushed Anodized Aluminum[1] –		28
Options		"EXIT", French –		F		Brushed Anodized Dark Bronze –		40
		"EXIT", Spanish –		S		**Faceplate Finish**		
		Blank –		B				
		Type						

[1]Standard

RCI Switches

990 Oversized Tamper-Resistant Handicap Pushbutton

3"W x 4-3/4"H (76mm x 121mm)

990 Oversized Tamper-Resistant Handicap Button		List Price
990-MO x 28	Momentary Handicap	$143.00
990-MA x 28	Maintained Handicap	$143.00
990-TD x 28	Electronic Time Delay Handicap	$225.00
40 Finish		N/C

How To Order

990		-		-		x	
	Type				**Switch Mode**		
Handicap Symbol—	BH				MO	–Momentary	
Blank—	B				MA	–Maintained	
					TD	–Time-Delay	
Narrow—	N					Brushed Anodized Aluminum[1] –	28
Options						Brushed Anodized Dark Bronze –	40
					Faceplate Finish		

[1]Standard

Includes EXIT and EMERGENCY labels

990 Oversized Tamper-Resistant Exit Pushbutton

3"W x 4-3/4"H (76mm x 121mm)

990 Oversized Tamper-Resistant Exit Button		List Price
990-MO x 28	Momentary Exit	$143.00
990-MA x 28	Maintained Exit	$143.00
990-TD x 28	Electronic Time Delay Exit	$225.00
40 Finish		N/C

How To Order

990		-			-		x	
	Color					**Switch Mode**		
	Red[1]—	R				MO	–Momentary	
	Green—	G				MA	–Maintained	
						TD	–Time-Delay	
Narrow—	N	English –	E			Brushed – Anodized Aluminum[1]		28
Options		French –	F			Brushed – Anodized Dark Bronze		40
		Spanish—	S			**Faceplate Finish**		
		Blank –	B					
		Type						

[1]Standard

RCI Switches

991 Pneumatic Time Delay Handicap Pushbutton

Standard: 2-3/4"W x 4-1/2"H (70mm x 114mm)
Narrow: 1-3/4"W x 4-1/2"H (41mm x 114mm)

991 Pneumatic Time Delay Handicap Button		List Price
991B-PTD x 32D	Pneumatic Handicap	$353.00
991NB-PTD x 32D	Narrow Pneumatic Handicap	$353.00

How To Order

		Options					
	N	–Narrow					
991		B	-		PTD	x	32D
				B	– Blank		
				H	– Handicap		

991 Pneumatic Time Delay Exit Pushbutton

Standard: 2-3/4"W x 4-1/2"H (70mm x 114mm)
Narrow: 1-3/4"W x 4-1/2"H (41mm x 114mm)

991 Pneumatic Time Delay Exit Button		List Price
991R-PTD x 32D	Pneumatic Exit	$353.00
991NR-PTD x 32D	Narrow Pneumatic Exit	$353.00

How To Order

			Options					
	N	–Narrow						
991		R		-	PTD	x	32D	
			E	–Push to Exit				
			B	–Blank				
			Type					

RCI Switches

919 Rotary Release Pushbutton

3"W x 4-1/2"H (76mm x 114mm)

919 Rotary Release Button		List Price
919-MA x 28	Rotary-Release Exit Maintained	$153.00
40 Finish		N/C

How To Order

Faceplate Finish

Brushed Anodized – Aluminum[1]	28
Brushed Anodized – Dark Bronze	40

919	-	MA	x

[1]Standard

920 Emergency Release Keyswitch/Pushbutton

2-3/4"W x 4-1/2"H (70mm x 114mm)

920 Emergency Release Button/Keyswitch		List Price
920MA x 32D	Emergency Release Maintained Red (2-SPST) Locking. Tamper-proof Fasteners	$189.00

How To Order

920	-	MA	x	32D

RCI Switches

917 Easy Touch Pushbutton

2-3/4"W x 4-1/2"H (70mm x 114mm)

917 Easy Touch Exit Pushbutton		List Price
917 - MO x 28	Easy Touch Exit Push Button 12-40VDC	$316.00

How To Order

917	-	MO	x	28

972 All-In-One Illuminated Pushbutton

2-3/4"W x 4-1/2"H (70mm x 114mm)

972 All-In-One Illuminated Pushbutton		List Price
972-L-EF-MO x 32D	English/French Momentary	$53.00
972-L-EF-TD30-MO x 32D	English/French Momentary With 30sec. Fixed Timer	$110.00
972-L-EF-TD30A-MO x 32D	English/French Momentary With 0-30sec. Adjustable Timer	$110.00

How To Order

				Options					
				TD30 – 30 Sec. Fixed Timer					
				TD30A – 0-30 Sec. Adjustable Time					
972	-		-		-	MO	x	32D	
		ES – English & Spanish							
		EF – English & French							
		Language							

RCI Switches

970 Illuminated Exit Pushbutton

Standard: 3"W x 4-3/4"H (76mm x 121mm)
Narrow: 1-5/8"W x 4-3/4"H (41mm x 121mm)

970 Tamper-Resistant Exit Button		List Price
970-MO-12 x 28	Momentary 12VDC Blue Exit Button	$93.00
970-MO-24 x 28	Momentary 24VDC Blue Exit Button	$93.00
970-MA-12 x 28	Maintained 12VDC Blue Exit Button	$93.00
970-MA-24 x 28	Maintained 24VDC Blue Exit Button	$93.00
970-TD-12 x 28	Electronic Time Delay 12VDC Blue Exit Button	$166.00
970-TD-24 x 28	Electronic Time Delay 24VDC Blue Exit Button	$166.00
970N-MO-12 x 28	Narrow Momentary 12VDC Blue Exit Button	$93.00
970N-MO-24 x 28	Narrow Momentary 24VDC Blue Exit Button	$93.00
970N-MA-12 x 28	Narrow Maintained 12VDC Blue Exit Button	$93.00
970N-MA-24 x 28	Narrow Maintained 24VDC Blue Exit Button	$93.00
970N-TD-12 x 28	Narrow Time Delay 12VDC Blue Exit Button	$166.00
970N-TD-24 x 28	Narrow Time Delay 24VDC Blue Exit Button	$166.00
40 Finish		N/C

How To Order

Lens
Blue[1] B
Yellow Y
Green G
Red R

Faceplate Finish
Brushed Anodized Aluminum[1] — 28
Brushed Anodized Dark Bronze — 40

Options
Audible Alert — A

970 - - - - x

Narrow — N
Options

Momentary — MO
Maintained — MA
2x Momentary — DMO
2x Maintained — DMA
Time-Delay — TD
Switch Mode

12VDC — 05
24VDC — 08
Voltage

[1]Standard

975 Illuminated Exit Pushbutton

Standard: 3"W x 4-3/4"H (76mm x 121mm)
Narrow: 1-5/8"W x 4-3/4"H (41mm x 121mm)

975 LED Illuminated Pushbutton		List Price
975-MO-05 x 28	Momentary 12VDC	$143.00
975-MO-08 x 28	Momentary 24VDC	$143.00
975N-MO-05 x 28	Narrow, Momentary 12VDC	$143.00
975N-MO-08 x 28	Narrow, Momentary 24VDC	$143.00
975-TD-12V x 28	Time Delay 3" x 4-3/4" 12V x 28	$206.00
975-TD-24V x 28	Time Delay 3" x 4-3/4" 24V x 28	$206.00
975N-TD-12V x 28	Narrow, Time Delay 1-5/8" x 4-3/4" 12V x 28	$206.00
975N-TD-24V x 28	Narrow, Time Delay 1-5/8" x 4-3/4" 24V x 28	$206.00
40 Finish		N/C

How To Order

Switch Mode
Momentary — MO
Time-Delay — TD

Voltage
05 –12VAC/VDC
08 –24VAC/VDC

975 - - x

Narrow — N
Options

Brushed Anodized – Aluminum[1] 28
Brushed Anodized Dark – Bronze 40
Faceplate Finish

[1]Standard

RCI Switches

980 Economy Pushbutton

2-3/4"W x 4-1/2"H (70mm x 115mm)

980 Economy Pushbutton		List Price
980-MO x 32D	Momentary Economy Pushbutton	$77.00
980-MA x 32D	Maintined Economy Pushbutton	$77.00
980-TD x 32D	Time-Delay Economy Pushbutton	$148.00

How To Order

		Switch Mode		
		MO –Momentary		
		MA –Maintained		
		TD –Time-Delay		
980	-		x	32D

903 Audible Alert

3"W x 4-3/4"H (76mm x 121mm)

903 Audible Alert		List Price
903 x 28	Audible Alert 3" x 4-3/4" x 28	$130.00
903N x 28	Narrow Audible Alert 1-5/8" x 4-3/4" x 28	$130.00
40 Finish		N/C

How To Order

		Options	
	N	–Narrow stile	
903		x	
Brushed Anodized — Aluminum[1]			28
Brushed Anodized — Dark Bronze			40
		Faceplate Finish	

[1]Standard

RCI Switches

960 Tamper-Resistant Keyswitch

Standard: 3"W x 4-3/4"H (76mm x 121mm)
Narrow: 1-5/8"W x 4-3/4"H (41mm x 121mm)
Key cylinder sold separately.

960 Tamper-Resistant Keyswitch		List Price
960-MO x 28	Momentary, Tamper-proof	$108.00
960-MA x 28	Maintained, Tamper-proof	$108.00
960-TD x 28	Pneumatic Time Delay, Tamper-proof	$353.00
960N-MO x 28	Narrow Momentary, Tamper-proof	$108.00
960N-MA x 28	Narrow Maintained, Tamper-proof	$108.00
960N-TD x 28	Narrow Pneumatic Time Delay, Tamper-proof	$353.00

How To Order

							Faceplate Finish	
							Brushed Anodized Aluminum[3] —	28
		Options					Brushed Anodized Dark Bronze —	40
		DPDT[1] —	D					
960		-				x		
Narrow-Stile —	N	Momentary —		MO	MO	–Momentary		
Options		Maintained —		MA	MA	–Maintained		
		DPDT Momentary —		DMO	DMO	–DPDT Momentary		
		DPDT Maintained —		DMA	DMA	–DPDT Maintained		
		Time-Delay —		TD		**Second Switch Mode**		
		Switch Mode						

[1]Only available with MO and MA switch mode
[2]Second switch
[3]Standard

960RO Tamper-Resistant Keyswitch with Reset/Override

Standard: 3"W x 4-3/4"H (76mm x 121mm)
Narrow: 1-5/8"W x 4-3/4"H (41mm x 121mm)
Key cylinder sold separately.

960RO Tamper-Resistant Keyswitch		List Price
960RO-MOMO	MOMO Reset/Override Screen Printed KS, Tamper-proof	$141.00

How To Order

						Options[2]	
			Options		MO	–Momentary	
		D	–DPDT[1]		MA	–Maintained	
960RO	-		-		x	28	
				MO	–Momentary		
				MA	–Maintained		
				Switch Mode			

[1]Only available with MO and MA switch mode
[2]Second switch

RCI Switches

904P Emergency Pull Station

3-9/16"W x 4-1/2"H (91mm x 114mm)

913 Microwave Motion Switch

4-5/8"W x 4-5/8"H (117mm x 117mm) &
2-3/4"W x 4-5/8"H (70mm x 117mm)

904 Emergency Pull Station		List Price
904P x B	Blue Pull Station - All-In-One Design Includes English/French/Spanish Labels	$91.00
904P x Y	Yellow Pull Station - All-In-One Design Includes English/French/Spanish Labels	$101.00

NOTE: Yellow pull station no longer available

How To Order

904P	x	
	Blue[1] —	B

Finish

[1]Standard

913 Microwave Motion Switch		List Price
913 x B	Single and Double Gang Black Face Plates	$277.00
913 x W	Single and Double Gang White Face Plates	$277.00
913 x CR	Single and Double Gang Cream Face Plates	$277.00

How To Order

		Finish
Black -		B
Cream -		CR
White -		W
913	x	

909 Rocker Switch

Surface-mount: 2-7/16"W X 2-7/16"H x 7/8"D (61mm x 61mm x 22mm)
Flush-mount: 3-7/16"W x 3-7/16"H x 5/8"D (87mm x 87mm x 16mm)

914 Sounder

4-3/4"W x 5-9/16"H (119mm x 142mm)

909 Rocker Switch		List Price
909S-MO	Momentary Surface Rocker Switch	$49.00
909S-MA	Maintained Surface Rocker Switch	$49.00
909F-MO	Momentary Flush Rocker Switch	$49.00

How To Order

			Mount
	S	–	Surface
	F	–	Flush
909		-	
		MO	– Momentary
		MA	– Maintained[1]
			Switch Mode

[1]Available in surface-mount design only

914 Sounders		List Price
914W	95-102dBA 12-24 VDC Sounder	$83.00
914WPR[1]	95-102dBA 12-24 VDC Sounder/ Weatherproof Red	$88.00

How To Order

			Type
	WPR[1]	–	Weather-Proof, Red Finish
	W	–	White Finish
914			

[1]Only available in red finish

RCI Switches

915 Passive Infrared

Hands-free egress switch.
6-1/4"W x 1-13/32"H x 1-1/2"D
(159mm x 36mm x 38mm)

915 Passive Infrared Egress Switch		List Price
915 x B	PIR 12 or 24 VDC Black	$242.00
915 x G	PIR 12 or 24 VDC Grey	$242.00

How To Order

	Finish	
	Black –	B
	Gray –	G
915	x	

915AFI Active Focused Infrared

6-7/8"W x 1-7/8"H x 2"D (175mm x 48mm x 51mm)

915AFI Passive Infrared Egress Switch		List Price
915AFI x B	Request to Exit Detector, Active Focused Infrared 12-24V AC/DC - Black	$189.00

How To Order

915AFI	x	B

RCI Switches

946 Square Push Plate

4-1/2" Sq. (114mm)
4-3/4" Sq. (121mm)
6" Sq. (152mm)

946 Square Pushplates		List Price
946HP45-MO x 32D	4-1/2" Square Plate with Handicap Logo and Push to Open Text, Momentary	$93.00
946H45-MO x 32D	4-1/2" Square Plate with Handicap Logo, Momentary	$93.00
946HP475-MO x 32D	4-3/4" Square Plate with Handicap Logo and Push to Open Text, Momentary	$93.00
946H475-MO x 32D	4-3/4" Square Plate with Handicap Logo, Momentary	$93.00
946HP6-MO x 32D	6" Square Plate with Handicap Logo and Push to Open Text, Momentary	$98.00
946H6-MO x 32D	6" Square Plate with Handicap Logo, Momentary	$98.00
BLU Finish		N/C

How To Order

	Type						
	P – Push to Open						
	H – Handicap Symbol				32D	**Finish** – Brushed Stainless Steel	
	HP – Handicap Symbol + Push to Open				BLU	– Blue	
946			-		MO	x	
4-1/2" (114mm)[1] —	45		**Options**				
4-3/4" (121mm) —	475						
6" (152mm) —	6						
Size							

[1]Only available with HP type

950 Round Push Plate

4-1/2" Dia. (114mm)
6" Dia. (152mm)

950 Round Pushplates		List Price
950P45-MO x 32D	4-1/2" Momentary "Push to Open" (Replaces 950P4-MO)	$93.00
950HP45-MO x 32D	4-1/2" Momentary Handicap & PTO (Replaces 950HP4-MO)	$93.00
950H45-MO x 32D	4-1/2" Momentary Handicap (Replaces 950H4-MO)	$93.00
950H6-MO x 32D	6" Momentary Large Handicap Logo Only	$98.00
950P6-MO x 32D	6" Momentary "Push to Open"	$98.00
950HP6-MO x 32D	6" Momentary Handicap & PTO 6"	$98.00

How To Order

	Type					
	P – Push to Open					
	H – Handicap Symbol					
	HP – Handicap Symbol + Push to Open					
950		-		MO	x	32D
4-1/2" (114mm) —	45	**Options**				
6" (152mm) —	6					
Size						

RCI Switches

946T Square Short-Range Touchless Actuator

4-3/4" Sq. (121mm)

946 Square Short-Range Touchless Actuator		List Price
946THW475	4.75" Square Touchless Short Range Actuator with Handicap Logo and Wave To Open Text	$211.00
946TW475	4.75" Square Touchless Short Range Actuator with Wave To Open Text	$211.00
946TH475	4.75" Square Touchless Short Range Actuator with Handicap Logo	$211.00

How To Order

	Type					
	H	–Handicap & Wave Symbol				
	HW	–Handicap & Wave Symbol & "Wave To Open"				
	W	–"Wave To Open" & Wave Symbol				
946T		475	-	MO	x	32D

950T Round Short-Range Touchless Actuator

6" Dia. (173mm x 152mm)

950 Round Short-Range Touchless Actuator		List Price
950THW6 x 32D	6" Round Touchless Short Range Actuator with Handicap Logo and Wave To Open Text	$211.00
950TW6 x 32D	6" Round Touchless Short Range Actuatorwith Wave To Open Text	$211.00
950TH6 x 32D	6" Round Touchless Short Range Actuator with Handicap Logo	$211.00

How To Order

	Type					
	H	–Handicap & Wave Symbol				
	HW	–Handicap & Wave Symbol & "Wave To Open"				
	W	–"Wave To Open" & Wave Symbol				
950T		6	-	MO	x	32D

RCI Switches

910TC Touchless Switch

2-15/16"W x 4-11/16"H

910TC Touchless Switch		List Price
910TC	Gesture control touchless switch	$120.00
910TC-WRM-WRB	Gesture control touchless switch with 433MHz Remote Module & Remote Transmitter (kitted)	$220.00
910TC-WRM	433MHz Remote Module	$80.00
910TC-WRB	433MHz Remote Transmitter	$40.00

How To Order

	Type	
	WRM-WRB	–Remote Module & Remote Transmitter
	WRM	–Remote Module
	WRB	–Remote Transmitter
910TC		-

940 Rectangular Push Plate

2-3/4"W x 4-1/2"H (70mm x 114mm)

940 Rectangular Stainless Steel Pushplates		List Price
940H-MO x 32D	Momentary, SPDT	$93.00
940HP-MO x 32D	Momentary, SPDT	$93.00
940PTE-MO x 32D	Momentary, SPDT	$93.00
940B-MO x 32D	Momentary, SPDT	$93.00

How To Order

		Type			
	H	–Handicap Symbol			
	HP	–Handicap Symbol + Push to Open			
	PTE	–Push to Exit			
	B	–Blank			
940		-		x	32D
			MO	–Momentary (SPDT)[1]	
				Switch Mode	

[1]Standard

RCI Switches

941 Mullion Push Plate

1-1/2"W x 4-3/4"H (38mm x 121mm)

950 Round Pushplates		List Price
941H-MO x 32D	Narrow, Momentary Handicap Logo Only	$76.00
941P-MO x 32D	Narrow, Momentary PTO	$76.00
941HP-MO x 32D	Narrow, Momentary Handicap PTO	$76.00
941HPMICRO x 32D	Narrow, Momentary, Handicap PTO with Microswitch Door Switch	$76.00
941HMICRO x 32D	Narrow, Momentary, Handicap with Microswitch Door Switch	$76.00
BLU Finish		N/C

How To Order

	Type					**Finish**	
	P	–Push To Open					
	H	–Handicap Symbol					
	HP	–Handicap Symbol + Push To Open				32D	–Brushed Stainless Steel Finish
	B	–Blank[1]				BLU	–Blue
941			-	MO	x		
	MICRO	–Micro-Switch[2]					
	Options						

[1]Available only in 32D finish
[2]Available only with HP and H type in 32D finish

947 Dual Vestibule Push Plate

4-3/4"W x 4-3/4"H (121mm x 121mm)

947 Dual Vestibule Pushplate		List Price
947HPA x 32D	Vestibule Plate with Text, Logo, and Arrows (Requires Two 3-Volt Transmitters)	$150.00

How To Order

947	HPA	-	MO	x	32D

RCI Switches

9LP36 Low Profile Push Plate

6"W x 36"H (152mm x 915mm)

9LP36 36" Pushplate for Low Profile Solutions		List Price
9LP36-HW x 32D	36" Low Profile Push Bar - Hard Wired Installation Only	$704.00
9LP36-433	36" Low Profile Push Bar - Plate Includes 433 MHz Transmitter - Wireless Installation	$763.00

How To Order

		Type		
		HW		–For Hardwire Installation
		433		–For Wireless Installation (433MHz Transmitter)
9LP36	-		x	32D

9RCT433/ 9DRCR433 Transmitters & Receivers

2-3/4"W x 2-1/8"H x 1"D
(70mm x 55mm x 14mm)

433 MHz Transmitters & Receivers		List Price
9RCT4331	433 MHz One-Button Handheld, 3" x 2" x 1"	$64.00
9RCT4332	433 MHz Two-Button Handheld, 3" x 2" x 1"	$82.00
9RCT4333	433 MHz Three-Button Handheld, 3" x 2" x 1"	$82.00
9RCT4334	Four-Button Handheld, 3" x 2" x 1"	$82.00
9RCT4333V1	One-Button Wired with 3 Volt Battery - Not Compatible with 10BOXJAMBST, 3" x 2" x 1"	$77.00
9RCT4339V1	One-Button Wired with 9 Volt Battery - Not Compatible with 10BOXJAMBST, 3" x 2" x 1"	$64.00
9DRCR433VB	433 MHz Digital Receiver with Integrated Vestibule Sequencing, 3" x 2" x 1"	$79.00
9DRCR433EHT	433 MHz Digital Receiver with Extended Hold Time, 3" x 2" x 1"	$79.00

9BOLL Bollard/Mounting Post

6-1/4"W x 41-1/2"H x 4-1/4"D
(159mm x 1054mm x 108mm)

9 Series Bollards		List Price
9BOLLBLPC	Mounting Post for Stainless Steel Push Plates - Black	$375.00
9BOLLSPC	Mounting Post for Stainless Steel Push Plates - Silver	$399.00
9BOLLBRPC	Mounting Post for Stainless Steel Push Plates - Bronze	$399.00
9BOLLNCBLPC	Mounting Post Without Push Plate Cut Out - Black	$399.00
9BOLLNCSPC	Mounting Post Without Push Plate Cut Out - Silver	$416.00
9BOLLNCBRPC	Mounting Post Without Push Plate Cut Out - Bronze	$416.00

How To Order

	Options		
	NC		–Without Push Plate Cut Out
9BOLL		PC	
		BL	–Black
		S	–Silver
		BR	–Bronze
		Finish	

How To Order Transmitter

9RCT433		
	1	–One Button
	2	–Two Buttons
	3	–Three Buttons
	4	–Four Buttons
	3V1	–One Button Wired With 3V Battery
	9V1	–One Button Wired With 9V Battery Lead
	Type	

How To Order Receiver

9DRCR433		
	VB	–Receiver
	EHT	–Receiver With Extended Hold Time
	Type	

RCI Switches

Options & Accessories

940/941 Options		List Price
P94/5DMO	DPDT Momentary Switch	$50.00
940SUR	Surface Mount Box (940P/940HP) Brown	$39.00
941SUR	Surface Style Mount Box - Compatible with 10TD-433PB3V	$19.00
941FLU	Flush Style Mount Box - Compatible with 10TD433PB3V	$19.00
95045FLU	Round Flush Style Mounting Box	$55.00

946 Options		List Price
94645SUR	Square Surface Mounting Box (4.5")	$53.00
94645DGSUR	Double Gang Surface Mounting Box (4.5")	$53.00
946475SUR	Square Surface Mounting Box (4.75")	$53.00
946475FLU	Square Flush Style Mounting Box (4.75")	$53.00
946475WR	Weather Ring for Box (4.75")	$13.00
9466SUR	Square Surface Mounting Box (6")	$52.00
9466FLU	Flush Style Mount Box (6")	$53.00
946DGPLATE	Back Plate Required for Double Gang Electrical Box (4.75")	$20.00

950 Options		List Price
P94/5DMO	DPDT Momentary Switch	$50.00
950ESC45	Stainless Steel Escutcheon (950P45/950HP45)	$178.00
950ESC6	Stainless Steel Escutcheon (950P6/950HP6)	$178.00
9506SUR	Round Surface Style Mounting Box	$53.00
9506FLU	Round Flush Style Mounting Box	$56.00
9464PLAST	Plastic Mounting Box	$20.00
946DGPLATE	Back Plate Required for Double Gang Electrical Box (4.75")	$20.00

960 Options		List Price
96CYL-KA	Straight Cam Mortise 1-1/4" (Keyed Alike, 2 Keys)	$32.00
96CYL-KD	Straight Cam Mortise 1-1/4" (Keyed Different, 2 Keys)	$32.00
96DMO	DPDT Momentary Switch for Second Position	$58.00
96DMA	DPDT Maintained Switch for Second Position	$58.00
96LED	LED Option (Bi-Color - Red/Green)	$9.00
96MO	SPDT Momentary Switch for Second Position	$34.00
96MA	SPDT Maintained Switch for Second Position	$34.00
9SURBOX	Surface Box 4-3/4"H x 3"W x 2-1/2"D	$47.00
9RECBOX	Recessed Box 4-1/8"H x 2-1/2"W x 1-3/4"D	$27.00

970 Options		List Price
97AUD	Audible Alert Mounted On Same Plate As Button	$96.00
97MO	2-SPST Momentary Switch	$53.00
97MA	2-SPST Maintained Switch	$53.00
97DMO	4-SPST (2-SPST N.O. 2-SPST N.C.) Momentary Switch	$79.00
97DMA	4-SPST (2-SPST N.O. 2-SPST N.C.) Maintained Switch	$79.00
97Y	Yellow Push Button Cap Color	$15.00
97G	Green Push Button Cap Color	$15.00
97W	White Push Button Cap Color	$15.00
97R	Red Push Button Cap Color	$15.00
9SURBOX	Surface Box 4-3/4"H x 3"W x 2-1/2"D	$47.00
9RECBOX	Recessed Box 4-1/8"H x 2-1/2"W x 1-3/4"D	$27.00

Model	Description	List Price
TD30	30 Sec. Fixed Timer (12/24VDC)	$83.00
TD30A	0 To 30 Sec. Adjustable Relock Timer (12/24VDC)	$83.00
9SURBOX	Surface Box 4-3/4"H x 3"W x 2-1/2"D	$47.00
9RECBOX	Recessed Box 4-1/8"H x 2-1/2"W x 1-3/4"D	$27.00
946DGPLATE	Back Plate Required for Double Gang Electrical Box (4.75")	$20.00
910TC-WRM	433MHz remote receiver module	$95.00
910TC-WRB	433MHz remote transmitter	
P94/5DMO	DPDT momentary contact switch kit	$50.00

RCI Power Transfers and Door Contacts

9500/9501 Mortise Pin Transfers

1/2"W x 2-3/4"H (13mm x 71mm)

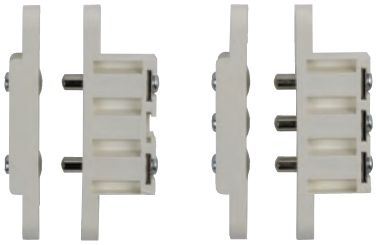

9500
2 Pin

9501
3 Pin

How To Order

	Type
0	–2 Pin Contact
1	–3 Pin Contact
950	

9500/9501 Mortise Pin Transfers		List Price
9500	2 PIN Mortise Transfer 1.5A @ 24VAC, white finish	$77.00
9501	3 PIN Mortise Transfer 1.5A@ 24VAC, white finish	$93.00

9503/9505 Ball Transfers

1/2"W x 2-3/4"H (13mm x 71mm)

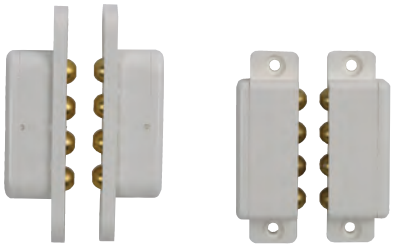

9503
Mortise

9505
Surface

How To Order

	Type
3	–Mortise
5	–Surface
950	

9503/9505 Ball Transfers		List Price
9503	4 BALL Mortise Transfer 0.5A@ 24VDC, Mortise Mount, white finish	$168.00
9505	4 BALL Surface Transfer 0.5A @ 24VDC, Surface Mount, white finish	$168.00

9507/9509 Flex Loops

How To Order

Type		Finish	
Standard —	7	Silver[1] –	S
Heavy-Duty —	9	Brown –	B
		White –	W
950		-	

Length	
7" (178mm) —	7
12" (305mm) —	12
18" (457mm) —	18
24" (610mm) —	24
36" (914mm) —	36

[1]9509 available in Silver only

Current Transfers - 9507 Flex Loops		List Price
9507-7	7" Door Loop	$20.00
9507-12	12" Door Loop	$25.00
9507-18	18" Door Loop	$29.00
9507-24	24" Door Loop	$33.00
9507-36	36" Door Loop	$42.00

Current Transfers - 9509 Flex Loops		List Price
9509-7S	7" Heavy Duty Door Loop	$29.00
9509-12S	12" Heavy Duty Door Loop	$33.00
9509-18S	18" Heavy Duty Door Loop	$38.00
9509-24S	24" Heavy Duty Door Loop	$42.00
9509-36S	36" Heavy Duty Door Loop	$55.00

9520/9521/9522 9523/9524 Electrified Hinges

9520 4" x 4" (102mm x 102mm)
9521 4-1/2" x 4" (114mm x 102mm)
9522 4-1/2" x 4-1/2" (114mm x 114mm)
9523 5" x 4-1/2" (127mm x 114mm)
9524 5" x 5" (127 mm x 127mm)

Current Transfers - 9507 Flex Loops		List Price
95206	2 + 4 Wire 4" x 4" Hinge x 5 Knuckle x 4' Lead x 26D	$195.00
95216	2 + 4 Wire 4-1/2" x 4" Hinge x 5 Knuckle x 4' Lead x 26D	$195.00
95226	2 + 4 Wire 4-1/2" x 4-1/2" Hinge x 5 Knuckle x 4' Lead x 26D	$195.00
95236	2 + 4 Wire 4-1/2" x 5" Hinge x 5 Knuckle x 4' Lead x 26D	$213.00
95246	2 + 4 Wire 5" x 5" Hinge x 5 Knuckle x 4' Lead x 26D	$231.00
95209	2 + 4 Wire 4" x 4" Hinge x 5 Knuckle x 4' Lead x 32D	$242.00
95219	2 + 4 Wire 4-1/2" x 4" Hinge x 5 Knuckle x 4' Lead x 32D	$242.00
95229	2 + 4 Wire 4-1/2" x 4-1/2" Hinge x 5 Knuckle x 4' Lead x 32D	$242.00
95239	2 + 4 Wire 4-1/2" x 5" Hinge x 5 Knuckle x 4' Lead x 32D	$259.00
95249	2 + 4 Wire 5" x 5" Hinge x 5 Knuckle x 4' Lead x 32D	$277.00

How To Order

	Size	
	0	–4" x 4" (102mm x 102mm)
	1	–4-1/2" x 4" (114mm x 102mm)
	2	–4-1/2" x 4-1/2" (114mm x 114mm)
	3	–5" x 4-1/2" (127mm x 114mm)
	4	–5" x 5" (127 mm x 127mm)
952		x

Finish	
Brushed Chrome —	26D
Brushed Stainless Steel —	32D

RCI Power Transfers and Door Contacts

9512/9513 Bridge Cables

9512 Visible face: 1"W x 12-3/4"H (25mm x 324mm)
Recessed: 7/8"W x 10-3/16"H (23mm x 259mm)

9513 Visible face: 1"W x 21-7/16"H (25mm x 545mm)
Recessed: 7/8"W x 18-7/8"H (23mm x 479mm)

How To Order

	Type		
	2	–12-3/4" H (324mm)	
	3	–21-7/16" H (545mm)	
951		x	26

Current Transfers - Bridge Cables		List Price
9512	Bridge Cable 11-1/2" (10-3/16") x 1"	$82.00
9513	Bridge Cable 20-1/16" (18-3/4") x 1"	$132.00

9540 Recessed Magnetic Contact/Door Position Switch

3/4"W x 3/4"H x 7/8"D
(19mm x 19mm x 22mm)

How To Order

9540	x	
White —		W
Black —		B
Finish		

Door Position Switches		List Price
9540 x W	Recessed magnetic contact, white	$25.00
9540 x B	Recessed magnetic contact, black	$25.00

9530 Balanced Magnetic Contact/Door Position Switch

How To Order

9530

3-1/2"W x 1-1/4"H x 5/8"D
(89mm x 32mm x 16mm)

Door Position Switches		List Price
9530	Balanced magnetic contact	$233.00

Locksets

RCI Locksets

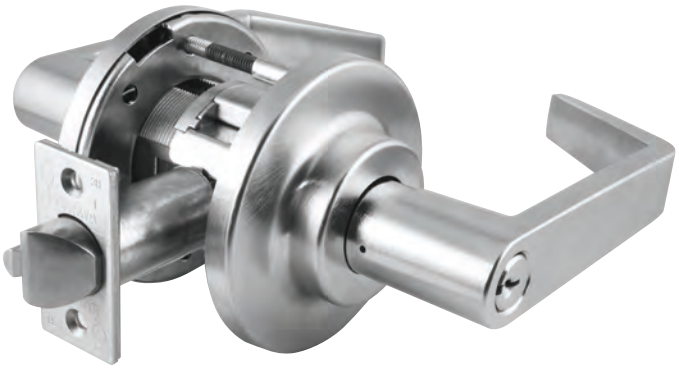

C800 Series Grade 1 Heavy-Duty Cylindrical Locksets

Provides exceptional security, enhanced aesthetics and rugged dependability.

C800 Locksets		List Price
C880ELDLRE6265	Storeroom, electrically locked (fail-safe), 12VDC	$395.00
C880ELDLRE6268	Storeroom, electrically locked (fail-safe), 24VDC	$395.00
C880ELRXDLRE6265	Storeroom, electrically locked (fail-safe), 12VDC, with request-to-exit	$452.00
C880ELRXDLRE6268	Storeroom, electrically locked (fail-safe), 24VDC, with request-to-exit	$452.00
C880EUDLRE6265	Storeroom, electrically unlocked (fail-secure), 12VDC	$395.00
C880EUDLRE6268	Storeroom, electrically unlocked (fail-secure), 24VDC	$395.00
C880EURXDLRE6265	Storeroom, electrically unlocked (fail-secure), 12VDC, with request-to-exit	$452.00
C880EURXDLRE6268	Storeroom, electrically unlocked (fail-secure), 24VDC, with request-to-exit	$452.00

How To Order

Function			Cylinder Type[1]		Finish[2]			Latch Bolts[5]		Strike Options	Lip Length	Keying Options[5]
Fail—Secure	80EU		S – Sargent 10 Line KIL (less cylinder)	626 – Satin Chrome (Standard)								
Fail-Safe—	80EL		D – Conventional Cylinder	625 – Bright Chrome								
			L – Less Cylinder	619PVD – Satin Nickel								
			C – SFIC	613PVD – Dark Oxidized Satin Bronze								
			J – Less SFIC	612PVD – Satin Bronze								
			T – Temporary SFIC	606PVD – Satin Brass								
			R – Schlage FSIC (less core)	605PVD – Bright Brass	AM – Antimicrobial Coating[3]							
C8										5001	1316	
Request to Exit—		RX	LR	C – 3-1/2" Dia.	5 – 12VDC	TX – Security Screws	RH	– Right Hand	134	– 1-3/4" – 2-1/4"		
			LC	D – 3-1/2" Dia. stamped, LOCK	8 – 24VDC		LH	– Left Hand	138	– 1-3/8" – 1-5/8"		
			LG	E – 3-1/2" Dia. stepped rose	**Voltage**			**Door Hand[6]**		**Door Thickness[4]**		
			LT	F – 3-1/2" Dia. stepped rose stamped, LOCK								
			LF[6]	**Rose Design**								
			LV[6]									
			Lever[5]									

[1]Consult factory for other cylinder options.
[2]For split finishes, consult factory. Specify hand.
[3]Available on 626 finish only. Consult factory for other finishes.
[4]Door Thickness Range: 1-3/4"–2-1/4" without spacers, 1-3/8"– 1-5/8" with spacers.
[5]See next page for options
[6]Specify handing when ordering LF or LV levers

NOTE: Consult factory for lead times on other options

RCI Locksets

Latch Bolts

Latch Throw

3/4" Throw – Latch	18	
1/2" Throw – Latch	10	

Latch Type

5	– All Other Functions
0	– C810, C840, C844

Backset

2-3/8" Backset –	1
2-3/4" Backset –	2
3-3/4" Backset –	3
5" Backset –	5

Face

0	– 1" Face, Square Corner
1	– 1" Face, 1/4" Radius Corner
2	– 1-1/8" Face, Square Corner

Keying Options

Standard Keyways

Keying

0BIT	– 0-Bitted
CMK	– Construction Master Keyed
MKD	– Master Keyed
NSK	– Non-Stock Keyed
KA4	– Keyed Alike, Sets of 4
KA2	– Keyed Alike, Sets of 2
KD	– Keyed Different

Keyway

SC	– Schlage C
SE	– Schlage E
D100	– DORMA SKC
CA	– Corbin 60
CD	– Corbin 59A1
CE	– CorbinRusswin L4
RA	– Russwin 981
RB	– Russwin D1
GA	– Sargent LA
SF	– Schlage F
WA	– Weiser E
YA	– Yale 8
YG	– Yale GA

Retrofit Keyways Available
0-Bitted Only

IC Keyways

Keying

TMP	– Temporary Construction Core
MKD	– Combinated (Master Keyed)

Keyway

BA	– Best A
BB	– Best B
BC	– Best C
BD	– Best D
BE	– Best E
BF	– Best F
BG	– Best G
BH	– Best H
BJ	– Best J
BK	– Best K
BL	– Best L
BM	– Best M
BQ	– Best Q
D100	– DORMA SKC (7-pin Core Only)
BLK	– Black Construction Core
BLU	– Blue Construction Core
GRN	– Green Construction Core

Specify color if required to match existing project

Lever Designs

LR

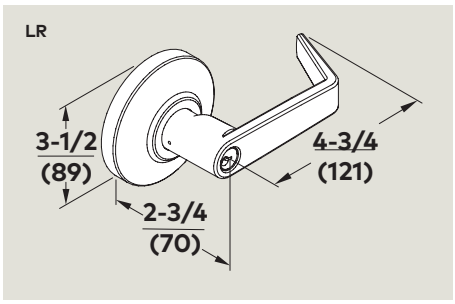

LC

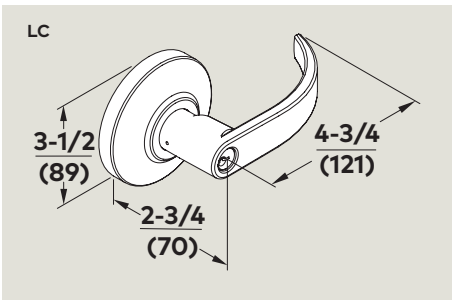

LG

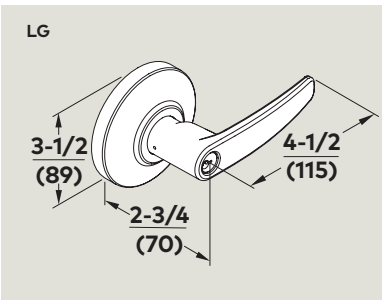

LT

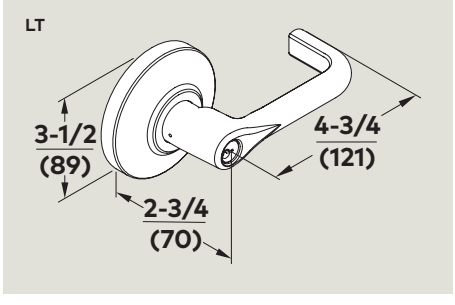

LF (Handed)

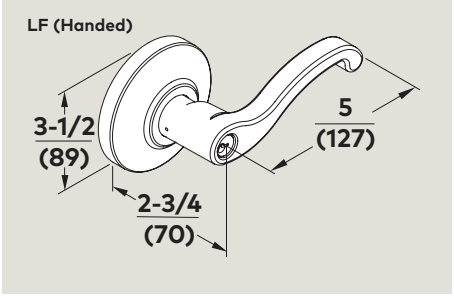

LV (Handed)

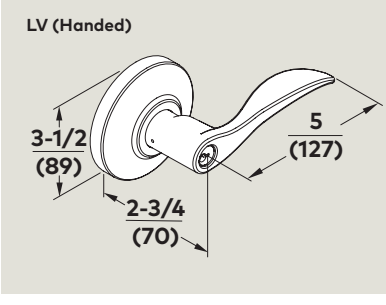

Specialty Locks

RCI Specialty Locks

3590 Lock 'N' Prox

Battery powered lock with built-in proximity reader – ideal standalone solution.
2-3/8" W x 2-3/8" H x 7/8" D (60mm x 60mm x 22mm)
Dimensions of lock only. Excludes pin.

Lock 'N' Prox	Battery Powered Lock	List Price
3590SPCRD	Battery Powered Cabinet Lock 'n' Prox - Straight Locking Pin - 1 Prog. Card & 2 User Cards	$378.00
3590SPFOB	Battery Powered Cabinet Lock 'n' Prox - Straight Locking Pin - 1 Prog. Card & 2 User Fobs	$378.00
3590SPACRD	Battery Powered Cabinet Lock 'n' Prox - Straight Locking Pin w/ Alarm - 1 Prog. Card & 2 User Cards	$419.00
3590SPAFOB	Battery Powered Cabinet Lock 'n' Prox - Straight Locking Pin w/ Alarm - 1 Prog. Card & 2 User Fobs	$419.00
3590RACRD	Battery Powered Cabinet Lock 'n' Prox - Right-angle Locking Pin - 1 Prog. Card & 2 User Cards	$419.00
3590RAFOB	Battery Powered Cabinet Lock 'n' Prox - Right-angle Locking Pin - 1 Prog. Card & 2 User Fobs	$419.00
3590RAACRD	Battery Powered Cabinet Lock 'n' Prox - Right-angle Locking Pin w/ Alarm - 1 Prog. Card & 2 User Cards	$378.00
3590RAA-FOB	Battery Powered Cabinet Lock 'n' Prox - Locking Pin W/Alarm - 1 Prog. Card & 2 User Fobs	$378.00

How To Order

		Options	
		A	– Alarm Function
3590			
Straight Pin–	SP		CRD –Proximity Cards – 2 pack
Right-Angle Spring Loaded Pin–	RA		FOB –Proximity Fobs – 2 pack
Locking Pin			**Credentials**

Example: **3590SPAFOB**

Accessories

Model	Description	List Price
3590PX-CRD10	User Cards - 10 Pack	$159.00
3590PX-FOB10	User fobs – 10 pack	$159.00
3590ER-SLOC	External Reader - Surface Mounted	$41.00
3590ER-RLOC	External Reader - Recess Mounted	$41.00
3590PX-PRO	Replacement programming card	$61.00
3590LP-ALM	Battery Powered Cabinet Lock 'n' Prox - Straight Locking Pin w/ Alarm	$61.00
3590LP-ZALSP	Battery Powered Cabinet Lock 'n' Prox - Right-angle Locking Pin w/ Alarm	$72.00

RCI Specialty Locks

3510LM Electromechanical Cabinet Lock

Compact, surface-mounted design ideal for small enclosures.
1-5/8" W x 1-7/8" H x 13/16" D (42mm x 48mm x 20mm)

Dimensions of lock only. Excludes pin.

Electric Cabinet Lock for Small Enclosures		List Price
3510LM	Electric Cabinet Lock with Latch Monitor	$115.00

How To Order

3510	LM

3513 Electromechanical Cabinet Lock

Compact, surface-mounted design ideal for small enclosures.
1-3/16" W x 2-7/8" H x 1-1/8" D (30mm x 73mm x 29mm)

Dimensions of lock only. Excludes pin.

3513DM Electromechanical Cabinet Lock with Monitoring

Compact, surface-mounted design ideal for small enclosures.
1-3/16" W x 2-7/8" H x 1-1/8" D (30mm x 73mm x 29mm)

Dimensions of lock only. Excludes pin.

Electric Cabinet Lock for Small Enclosures		List Price
3513	Field Selectable Eectromechanical Cabinet Lock 12 or 24VDC Black	$114.00
3513DMB	Field Selectable Cabinet Lock with Dual Monitoring12/24VDC Black	$160.00
3512TTAB	Catch for 3513/3513DM	$13.00

How To Order

3513	

DM –Dual Monitoring

Options

RCI Specialty Locks

3525 Electromechanical Rack Handle Lock

Provides intelligent electronic locking and monitoring capabilities.
1-1/2"W x 6-3/4"H x 1"D (37mm x 170mm x 24.5mm)

3525PRX Electromechanical Rack Handle Lock with Proximity Reader

Includes built-In 125kHz HID® proximity reader.
1-1/2"W x 8-1/4"H x 1"D (37mm x 210mm x 24.5mm)

Electronic Rack Handle (Includes 3 keys - Keyed Alike)		List Price
3525	Electronic Rack Handle 12VDC to 24VDC x Black	$482.00
3525PRX	Electro-Mechanical Rack Handle Lock with Proximity Reader	$585.00

Accessories

Model	Description	List Price
Cams		
3525-GR3815	0.61" (15.5mm) grip cam, 1-1/2" (38mm) length	$5.00
3525-GR3817	0.69" (17.5mm) grip cam, 1-1/2" (38mm) length	$5.00
3525-GR3819	0.77" (19.5mm) grip cam, 1-1/2" (38mm) length	$5.00
3525-GR3821	0.85" (21.5mm) grip cam, 1-1/2" (38mm) length	$5.00
3525-GR3823	0.93" (23.5mm) grip cam, 1-1/2" (38mm) length	$5.00
3525-GR4522	0.77" (19.5mm) grip cam, 1-3/4" (45mm) length	$5.00
3525-GR4524	0.85" (21.5mm) grip cam, 1-3/4" (45mm) length	$5.00
3525-GR4526	0.93" (23.5mm) grip cam, 1-3/4" (45mm) length	$5.00
Gearbox For Multi-Point Systems		
3525-MPLH	Left Hand Gearbox (CCW to open)	$34.00
3525-MPRH	Right Hand Gearbox (CW to open)	$34.00
Credentials		
1326R-H-10	125kHz Clamshell Proximity Card, HID® protocol, 10 pack	$45.00
1326R-H-25	125kHz Clamshell Proximity Card, HID® protocol, 25 pack	$111.00
1326R-H-50	125kHz Clamshell Proximity Card, HID® protocol, 50 pack	$216.00
1386R-H-10	125kHz Printable Proximity Card, HID® protocol, 10 pack	$83.00
1386R-H-25	125kHz Printable Proximity Card, HID® protocol, 25 pack	$202.00
1386R-H-50	125kHz Printable Proximity Card, HID® protocol, 50 pack	$404.00
1314R-H-10	125kHz Thick Printable Proximity Card, HID® protocol, 10 pack	$47.00
1314R-H-25	125kHz Thick Printable Proximity Card, HID® protocol, 25 pack	$113.00
1314R-H-50	125kHz Thick Printable Proximity Card, HID® protocol, 50 pack	$218.00
1346R-H-10	125kHz Proximity Fob, HID® protocol, 10 pack	$95.00
1346R-H-25	125kHz Proximity Fob, HID® protocol, 25 pack	$239.00
1346R-H-50	125kHz Proximity Fob, HID® protocol, 50 pack	$468.00

How To Order

3525 [ ]
[PRX] –Proximity Reader
Options

HID® is a registered trademark of HID Global Corporation, an ASSA ABLOY company.
All other trademarks are the property of their respective owners.
RCI reserves the right to change specifications without notice.

NOTE: The lock sensor is an optical device that senses the presence of the locking cam. Keyed cylinder can affect sensing. Removal of factory installed keyed cylinder will void warranty.

RCI Specialty Locks

3520 Electronic Latch

Suited for a variety of applications with multiple mounting configurations.
3-5/8"W x 1-11/32"H x 1"D (92mm x 34mm x 25mm)

3520 Electronic Latch		List Price
3520FC	3520 Front mount center 12VDC electronic latch	$180.00
3520FL	3520 Front mount left 12VDC electronic latch	$180.00
3520FL24	3520 Front mount left 24VDC electronic latch	$180.00
3520FR	3520 Front mount right 12VDC electronic latch	$180.00
3520SC	3520 Side mount center 12VDC electronic latch	$180.00
3520SL	3520 Side mount left 12VDC electronic latch	$180.00
3520SL24	3520 Side mount left 24VDC electronic latch	$180.00
3520SR	3520 Side mount right 12VDC electronic latch	$180.00
3520SR24	3520 Side mount right 24VDC electronic latch	$180.00

3520 Electronic Latch Accessories		List Price
3520WH-40	Wire harness with mate connector, 11.81" (300mm)	$20.00
3520WH-41	Wire harness with mate connector, 39.37" (1000mm)	$26.00
3520WH-42	Wire harness with mate connector, 78.74" (2000mm)	$38.00
3520RK	Rotation kit for field configuration of latch bolt direction/orientation	$7.00

How To Order

Mount		Latch Bolt Orientation	Voltage	
Side —	S			
Front —	F		24	–24VDC[2]
3520				
		Left —	L	
		Right —	R	
		Center —	C	

[2]12VDC Standard

MEM4400 Compact Electromechanical Lock

Ideal for sliding doors or small enclosures.
1-3/4"W x 1-3/16"H x 21/32"D (44mm x 30mm x 16.5mm)
Armature Plate: 1-3/4"W x 1-3/16"H x 1/2"D (44mm x 30mm x 12.5mm)

Mechanical Electromagnetic Lock		List Price
MEM4400	Ultra-Compact Designed Electromagnetic Lock	$303.00

How To Order

MEM4400

S2500A Mini Electromagnetic Lock

For small enclosures or hutches.
4-1/4"W x 1-1/2"H x 3/4"D (107mm x 37mm x 20mm)
Armature Plate: 2-1/2"W x 1-1/4"H x 11/32"D (44mm x 30mm x 9mm)

S2500A Mini Electromagnetic Lock		List Price
S2500A-12	Mini Electromechanical lock	$103.00

How To Order

S2500A

RCI Specialty Locks

EM-MAG1500 Compact Electromechanical Lock

For outswing doors & small enclosures.
6-7/32"W x 1-7/16"H x 1-3/8"D (158mm x 36mm x 35mm)
Armature Plate: 4-3/4"W x 1-3/16"H x 1/2"D (121mm x 30mm x 12.5mm)

Mechanical Electromagnetic Lock		List Price
EM-MAG1500	Slim-line Electromagnetic Lock for Narrow Profile Door Frames	$284.00

How To Order

EM-MAG1500

MEM2400 Compact Electromechanical Lock

For inswing doors & small enclosures.
8-5/8"W x 1-7/16"H x 1-3/8"D (218mm x 36mm x 35mm)
Armature Plate: 7-1/8"W x 1-3/16"H x 1/2"D
(181mm x 30mm x 12.5mm)

Mechanical Electromagnetic Lock		List Price
MEM2400	Slim-line Electromagnetic Lock with Early Warning Detectors	$290.00

How To Order

MEM2400

L and/or Z bracket

Exit Devices

RCI Exit Devices

6451 Exit Sensor Bar

Non-latching bar activated with a light touch.
2-3/8"H x 2-7/16"D (60mm x 62mm)

6451 Exit Sensor Bar		List Price
6451-36 x 28	Exit Sensor Bar, 36", US28 finish	$434.00
6451-42 x 28	Exit Sensor Bar, 42", US4 finish	$434.00
6451-48 x 28	Exit Sensor Bar, 48", US28 finish	$434.00
6451-36 x 4	Exit Sensor Bar, 36", US4 finish	$455.00
6451-42 x 4	Exit Sensor Bar, 42", US4 finish	$455.00
6451-48 x 4	Exit Sensor Bar, 48", US4 finish	$455.00
6451-36 x 10B	Exit Sensor Bar, 36", US10B finish	$455.00
6451-42 x 10B	Exit Sensor Bar, US10B finish	$455.00
6451-48 x 10B	Exit Sensor Bar, US10B finish	$455.00
DMB Option		$395.00
PTE Option		Add $79.00
CLC Option		Add $37.00

Engraved Signage

Accessories

Model	Description	List Price
CAB64	Cable Kit; 16 feet, 8-conductor 22 AWG jacketed hook-up cable to facilitate field wiring	$54.00
TSB	Mounting Pads; modified to match Securitron® TSB mounting footprint	$32.00
WDK	Wood Door Kit; four thru-bolts and four sex nuts	$32.00

How To Order

					Finish	
					Brushed Anodized Aluminum[1] —	28
					Brushed Brass —	4
					Brushed Dark Bronze —	10B
6451	-			x		
36" (914mm) Door, 34" (864mm) Bar	-	36	DMB	– Dummy Bar		
42" (1067mm) Door, 40" (1016mm) Bar	-	42	PTE	– "Push To Exit" Engraved Signage		
48" (1219mm) Door, 46" (1168mm) Bar	-	48		**Options**		
Custom Length Cut	-	CLC				
Width						

Example: **6451 - 36 X 28**

[1]Standard

RCI Exit Devices

120 Series Exit Bar

Non-latching exit bar.
2-1/2"H x 3-5/8"D (63.5mm x 92mm)

Model	Description	For Door Widths	Finish 28	Finish 40
120A-SS1	Non-latching exit bar with SPDT switch	24–36" (610–914mm)	$386.00	$411.00
L120A-SS1	Non-latching exit bar with SPDT switch	37–48" (940–1219mm)	$446.00	$493.00
120A-SS2	Non-latching exit bar with 2SPDT switch	24–36" (610–914mm)	$416.00	$437.00
L120A-SS2	Non-latching exit bar with 2SPDT switch	37–48" (940–1219mm)	$483.00	$525.00
120D-SS1	Non-latching exit bar with SPDT switch and camlock dogging	24–36" (610–914mm)	$411.00	$434.00
L120D-SS1	Non-latching exit bar with SPDT switch and camlock dogging	37–48" (940–1219mm)	$471.00	$502.00
120D-SS2	Non-latching exit bar with 2SPDT switch and camlock dogging	24–36" (610–914mm)	$448.00	$460.00
L120D-SS2	Non-latching exit bar with 2SPDT switch and camlock dogging	37–48" (940–1219mm)	$520.00	$544.00

RCI Exit Devices

1200 Series Mechanical Rim Exit Bar

Interlocking latch design.
2-1/2"H x 3-5/8"D (63.5mm x 92mm)

Model	Description	For Door Widths	28 Finish	40 Finish
1200A	Mechanical rim exit bar, no dogging	24–36" (610–914mm)	$414.00	$442.00
L1200A	Mechanical rim exit bar, no dogging	37–48" (940–1219mm)	$479.00	$530.00
1200C*	Mechanical rim exit bar cylindrical dogging exit device	24–36" (610–914mm)	$454.00	$483.00
L1200C*	Mechanical rim exit bar cylindrical dogging exit device	37–48" (940–1219mm)	$520.00	$571.00
1200D	Mechanical rim exit bar cam dogging exit device	24–36" (610–914mm)	$414.00	$442.00
L1200D	Mechanical rim exit bar cam dogging exit device	37–48" (940–1219mm)	$479.00	$530.00
1200F	Mechanical rim exit bar fire exit device	24–36" (610–914mm)	$454.00	$483.00
L1200F	Mechanical rim exit bar fire exit device	37–48" (940–1219mm)	$520.00	$571.00
1210A	Mechanical rim exit bar no dogging, alarm module (9V battery)	32–36" (813–914mm)	$571.00	$612.00
L1210A	Mechanical rim exit bar no dogging, alarm module (9V battery)	37–48" (940–1219mm)	$636.00	$701.00
1210D	Mechanical rim exit bar, camlock dogging, alarm module (9V battery)	32–36" (813–914mm)	$592.00	$648.00
L1210D	Mechanical rim exit bar, camlock dogging, alarm module (9V battery)	37–48" (940–1219mm)	$656.00	$721.00
1210F	Mechanical rim exit bar, fire doors, alarm module (9V battery)	32–36" (813–914mm)	$592.00	$648.00
L1210F	Mechanical rim exit bar, fire doors, alarm module (9V battery)	37–48" (940–1219mm)	$656.00	$721.00
1220A	Mechanical rim exit bar, alarm module (12-24VDC remote, 9V battery backup)	32–36" (813–914mm)	$750.00	$779.00
L1220A	Mechanical rim exit bar, alarm module (12-24VDC remote, 9V battery backup)	37–48" (940–1219mm)	$814.00	$867.00
1220D	Mechanical rim exit bar, camlock dogging, alarm module (12-24VDC remote, 9V battery backup)	32–36" (813–914mm)	$770.00	$802.00
L1220D	Mechanical rim exit bar, camlock dogging, alarm module (12-24VDC remote, 9V battery backup)	37–48" (940–1219mm)	$836.00	$887.00
1220F	Mechanical rim exit bar for fire doors, alarm module (12-24VDC remote, 9V battery backup)	32–36" (813–914mm)	$770.00	$802.00
L1220F	Mechanical rim exit bar for fire doors, alarm module (12-24VDC remote, 9V battery backup)	37–48" (940–1219mm)	$836.00	$887.00
1230A	Mechanical rim exit bar, with alarm module (12-24VDC remote)	32–36" (813–914mm)	$571.00	$612.00
L1230A	Mechanical rim exit bar, with alarm module (12-24VDC remote)	37–48" (940–1219mm)	$636.00	$701.00
1230D	Mechanical rim exit bar, camlock dogging, alarm module (12-24VDC remote)	32–36" (813–914mm)	$592.00	$648.00
L1230D	Mechanical rim exit bar, camlock dogging, alarm module (12-24VDC remote)	37–48" (940–1219mm)	$656.00	$721.00
1230F	Mechanical rim exit bar for fire doors, alarm module (12-24VDC remote)	32–36" (813–914mm)	$592.00	$648.00
L1230F	Mechanical rim exit bar for fire doors, alarm module (12-24VDC remote)	37–48" (940–1219mm)	$656.00	$721.00

NOTES: Models with A,C or D Suffix: cULus Listed Panic Hardware, ANSI/BHMA A156.3-2001, Grade 1 Models with F Suffix: cULus Fire Exit Hardware rated 3-hours, ANSI/BHMA A156.3, Grade 1 Conforms to ANSI/UL10C and UBC 7-2 (1997) Alarm cylinder not included.

Options for 1200 Series		List Price
SS1A-10/20/30	Signal Switch Models, Alarm Module SPDT	$167.00
SS2A-10/20/30	Signal Switch Models, Alarm Module 2SPDT	$176.00
LMS	Lock Monitor Switch	$169.00

RCI Exit Devices

1300 Series
Electrified Rim Exit Bar

Interlocking latch design.
2-1/2"H x 3-5/8"D (63.5mm x 92mm)

Model	Description	For Door Widths	28 Finish	40 Finish
1300A	Electrified rim exit bar, no dogging	24–36" (610–914mm)	$744.00	$766.00
L1300A	Electrified rim exit bar, no dogging	37–48" (940–1219mm)	$811.00	$853.00
1300C*	Electrified rim exit bar, cylindrical dogging	24–36" (610–914mm)	$786.00	$839.00
L1300C*	Electrified rim exit bar, cylindrical dogging	37–48" (940–1219mm)	$853.00	$897.00
1300D	Electrified rim exit bar, camlock dogging	24–36" (610–914mm)	$744.00	$766.00
L1300D	Electrified rim exit bar, camlock dogging	37–48" (940–1219mm)	$811.00	$853.00
1300F	Electrified rim exit bar for fire doors	24–36" (610–914mm)	$786.00	$811.00
L1300F	Electrified rim exit bar for fire doors	37–48" (940–1219mm)	$853.00	$853.00
1310A	Electrified rim exit bar, no dogging, alarm module (9V battery)	32–36" (813–914mm)	$904.00	$918.00
L1310A	Electrified rim exit bar, no dogging, alarm module (9V battery)	37–48" (940–1219mm)	$963.00	$1,007.00
1310D	Electrified rim exit bar, camlock dogging, alarm module (9V battery)	32–36" (813–914mm)	$940.00	$963.00
L1310D	Electrified rim exit bar, camlock dogging, alarm module (9V battery)	37–48" (940–1219mm)	$1,007.00	$1,050.00
1310F	Electrified rim exit bar for fire doors, alarm module (9V battery)	32–36" (813–914mm)	$925.00	$950.00
L1310F	Electrified rim exit bar for fire doors, alarm module (9V battery)	37–48" (940–1219mm)	$985.00	$1,028.00
1320A	Electrified rim exit bar, alarm module (12-24VDC remote, 9V battery backup)	32–36" (813–914mm)	$1,073.00	$1,092.00
L1320A	Electrified rim exit bar, alarm module (12-24VDC remote, 9V battery backup)	37–48" (940–1219mm)	$1,139.00	$1,180.00
1320D	Electrified rim exit bar, camlock dogging, alarm module (12-24VDC remote, 9V battery backup)	32–36" (813–914mm)	$1,115.00	$1,139.00
L1320D	Electrified rim exit bar, camlock dogging, alarm module (12-24VDC remote, 9V battery backup)	37–48" (940–1219mm)	$1,180.00	$1,224.00
1320F	Electrified rim exit bar, fire doors, alarm module (12-24VDC remote, 9V battery backup)	32–36" (813–914mm)	$1,092.00	$1,116.00
L1320F	Electrified rim exit bar, fire doors, alarm module (12-24VDC remote, 9V battery backup)	37–48" (940–1219mm)	$1,159.00	$1,201.00
1330A	Electrified rim exit bar, with alarm module (12-24VDC remote)	32–36" (813–914mm)	$906.00	$930.00
L1330A	Electrified rim exit bar, with alarm module (12-24VDC remote)	37–48" (940–1219mm)	$845.00	$1,007.00
1330D	Electrified rim exit bar, camlock dogging (12-24VDC remote)	32–36" (813–914mm)	$940.00	$963.00
L1330D	Electrified rim exit bar, camlock dogging (12-24VDC remote)	37–48" (940–1219mm)	$1,007.00	$1,050.00
1330F	Electrified rim exit bar for fire doors, alarm module (12-24VDC remote)	32–36" (813–914mm)	$925.00	$950.00
L1330F	Electrified rim exit bar for fire doors, alarm module (12-24VDC remote)	37–48" (940–1219mm)	$985.00	$1,028.00

NOTES: Models with A,C or D Suffix: cULus Listed Panic Hardware, ANSI/BHMA A156.3-2001, Grade 1 Models with F Suffix: cULus Fire Exit Hardware rated 3-hours, ANSI/BHMA A156.3, Grade 1 Conforms to ANSI/UL10C and UBC 7-2 (1997) Alarm cylinder not included.

Options for 1300 Series		List Price
SS1A-10/20/30	Signal Switch Models, Alarm Module SPDT	$167.00
SS2A-10/20/30	Signal Switch Models, Alarm Module 2SPDT	$176.00
LMS	Lock Monitor Switch	$169.00

How To Order

			Signal Switch 2SPDT, Alarm Models — 10/20/30	SS2A				
			Signal Switch SPDT, Alarm Models — 10/20/30	SS1A				
			Signal Switch 2SPDT weather-proof —	SS2W				
			Signal Switch SPDT weather-proof —	SS1W				
Mechanical —	12		Signal Switch 2SPDT —	SS2			Brushed Anodized Aluminum —	28
Electrified —	13		Signal Switch SPDT —	SS1			Brushed Anodized Dark Bronze —	40
			-		-		x	
L	Long — Bar 37-48"	00A	— No Dogging			LMS	— Lock Monitor Switch	
		00C*	— Cylindrical Dogging					
		00D	— Cam Dogging					
		00F	— Fire Rated					
		10A	— No Dogging, Alarm (9V Battery)					
		10D	— Camlock Dogging, Alarm (9V Battery)					
		10F	— Fire Rated, Alarm (9V Battery)					
		20A	— Alarm (12-24VDC Remote, 9V Battery Backup)					
		20D	— Camlock Dogging, Alarm (12-24VDC Remote, 9V Battery Backup)					
		20F	— Fire Rated, Alarm (12-24VDC Remote, 9V Battery Backup)					
		30A	— Alarm (12-24VDC Remote)					
		30D	— Camlock Dogging, Alarm (12-24VDC Remote)					
		30F	— Fire Rated, Alarm (12-24VDC Remote)					

RCI Exit Devices

01 LTD

02P LTD

03C LTD

03P LTD

08-L

08E-L

Exterior Trims

For 1200/1300 rim exit devices.

- Electrified option available
- UL certified ANSI/BHMA 156.3, Grade 1
- UL certified for fire doors

Exterior Trims for 1200/1300 Exit Devices		28 Finish
02P-LTD	Escutcheon with pull – thru-bolt mounted 1-15/16"W	$87.00
03C-LTD	Escutcheon only – cutout for cylinder 1-7/8"W, thru-bolt mounted	$67.00
03P-LTD	Escutcheon with pull – cutout for cylinder 1-15/16"W, thru-bolt mounted	$98.00
08-L	Lever – field selectable handing LH/RH, cutout for cylinder, thru-bolt mounted 1-13/16"W, Std. LHR, field reversible to RHR	$271.00
08N-L	Lever narrow – cutout for cylinder, for 2-1/8" stile, thru-bolt mounted 1-13/16"W, specify handing	$271.00
08-EL	Electrified lever – field selectable handing LH/RH, cutout for cylinder, thru-bolt mounted 1-13/16"W, Std. LHR, field reversible to RHR, 24VDC standard (12VDC optional)	$458.00
08N-EL	Electrified lever narrow – cutout for cylinder, for 2-1/8" stile, thru-bolt mounted 1-13/16"W, specify handing, 24VDC standard (12VDC optional)	$458.00
40 finish		add $20.00

NOTE: Cylinders not supplied with trim.

Accessories for 1200 and 1300 Series		List Price
DDS	Double door strike, black oxide finish	$92.00
SS1	Signal switch SPDT	$98.00
SS2	Signal switch 2SPDT	$123.00
SS1W	Signal switch SPDT weather-proof with mounting hardware	$164.00
SS2W	Signal Switch, 2SPDT, Weatherproof	$164.00

Power Supplies

RCI Power Supplies

10-1 1.5A Power Supply

12-1/2"W x 12-1/2"H x 4"D (318mm x 318mm x 102mm)

10-1 1.5A Power Supply		List Price
10-1	1.5 Amp Power Supply - 12VDC/1.5 Amps or 24VDC/1 Amp	$216.00

How To Order

10	-	1	-	
			Fire Panel Disconnect	- FPD
			Options	

10-3 3A Power Supply

12-1/2"W x 12-1/2"H x 4"D (318mm x 318mm x 102mm)

10-3 3A Power Supply		List Price
10-3	3 Amp Power Supply - 12VDC/3 Amps or 24VDC/1.5 Amps	$274.00

How To Order

10	-	3	-	
			Fire Panel Disconnect	– FPD
			Options	

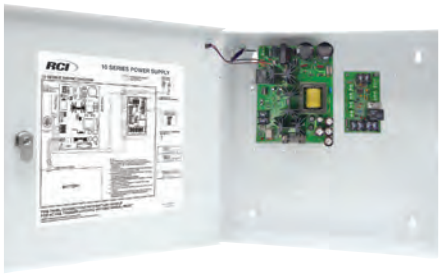

10-1-FPD 1.5A Power Supply with Fire Panel Disconnect

12-1/2"W x 12-1/2"H x 4"D (318mm x 318mm x 102mm)

10-1-FPD 1.5A Power Supply		List Price
10-1-FPD	1.5 Amp Power Supply w/ Fire Panel Disconnect - 12VDC/1.5 Amps or 24VDC/1 Amp For Use With Electromagnetic Locks	$279.00

How To Order

10	-	1	-	
			Fire Panel Disconnect	- FPD
			Options	

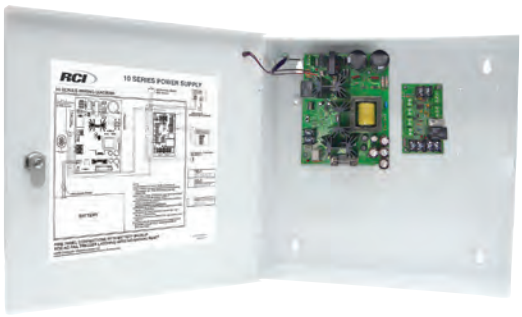

10-3-FPD 3A Power Supply with Fire Panel Disconnect

12-1/2"W x 12-1/2"H x 4"D (318mm x 318mm x 102mm)

10-3-FPD 3A Power Supply with Fire Panel Disconnect		List Price
10-3-FPD	3 Amp Power Supply w/ Fire Panel Disconnect - 12VDC/3 Amps or 24VDC/1.5 Amps For Use With Electromagnetic Locks	$367.00

How To Order

10	-	3	-	
			Fire Panel Disconnect	– FPD
			Options	

RCI Power Supplies

10-4 4A Power Supply

12-1/2"W x 12-1/2"H x 4"D (318mm x 318mm x 102mm)

10-4 4A Power Supply		List Price
10-4	4 Amp Power Supply - Field-selectable voltage 4A at 12VDC or 24VDC	$524.00

How To Order

10	-	4	-	
			Fire Panel Disconnect - **Options**	FPD

10-4-FPD
4A Power Supply with Fire Panel Disconnect

12-1/2"W x 12-1/2"H x 4"D (318mm x 318mm x 102mm)

10-4-FPD 4A Power Supply		List Price
10-4-FPD	4 Amp Power Supply w/ Fire Panel Disconnect - Field-selectable voltage 4A at 12VDC or 24VDC	$625.00

How To Order

10	-	4	-	
			Fire Panel Disconnect - **Options**	FPD

RCI Power Supplies Accessories

TD365 Day Timer

3-3/4"W x 4-11/16"H x 1"D
(95mm x 120mm x 25mm)

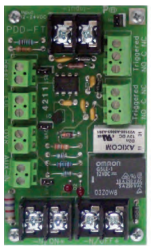

PDD-FT Power Distribution Board With Fire Trigger

2-1/4"W x 3-3/4"H (56.5mm x 95.25mm)

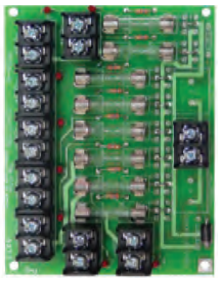

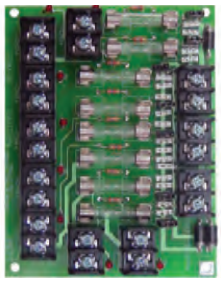

PDM-4 Distribution Board

2-1/4"W x 3-3/4"H (56.5mm x 95.25mm)

PDM-8 Distribution Board

3-3/4"W x 4-3/4"H (95.5mm x 122mm)

PDM-8S Distribution Board

3-3/4"W x 4-3/4"H (95.5mm x 122mm)

10 Series Options		List Price
TD365	365 Day Timer	$142.00
PDD-FT	1 Output Fire Panel Distribution Board	$111.00
PDM-4	Non-Selectable 4 Output Distribution Board (Fused)	$80.00
PDM-8	Non-Selectable 8 Output Distribution Board (Fused)	$95.00
PDM-8S	Selectable 8 Output Distribution Board	$146.00
PDD-FT-1.5	1 Output Fire Panel Distribution Board For 1.5A Power Supplies	$94.00
PDD-FT-3	Output Fire Panel Distribution Board for 3A Power Supplies	$132.00
24-12CONV	Converter Board 24-12VDC	$77.00

10 Series Accessories		List Price
TD1	Delayed Unlock - Manual Relock	$111.00
TD2	Delayed Unlock - Auto Relock	$111.00
TD3	Instant Unlock - Delayed Auto Relock	$83.00
TD4	3 Sec Nuisance Delay - Manual Relock	$111.00
BB12-4	4AH Battery Backup (1) 12VDC	$32.00
BB12-7	7AH Battery Backup (1) 12VDC	$44.00
BB24-4	4AH Battery Backup (2) 24VDC	$73.00
BB24-7	7AH Battery Backup (2) 24VDC	$86.00
9310RB	Relay Board 12/24VDC-10 Amp	$61.00

RCI Power Supplies Accessories

NOTE: T1002 shown

NOTE: T1002 shown

AC Plug-In Transformers

2-1/4"W x 3-3/16"H x 2"D (57mm x 81mm x 51mm)

Model	Description	Output Voltage / Power	List Price
T1002	Plug-In Transformer CSA to UL 1310	2VAC-20VA	$32.00
T1004	Plug-In Transformer CSA to UL 1310	16VAC-20VA	$39.00
T1008	Plug-In Transformer CSA to UL 1310	24VAC-20VA	$38.00

AC Wire-In Transformers

T1001: 2-1/4"W x 2"H x 2"D (57mm x 51mm x 51mm)
T1005 and T1009: 2-1/4"W x 2"H x 2-1/4"D (57mm x 51mm x 57mm)

Model	Description	Output Voltage / Power	List Price
T1001	Wire-In/UL Transformer	12VAC-20VA	$33.00
T1005	Wire-In Transformer CSA to UL 1585	16.5VAC-37VA	$31.00
T1009	Wire-In Transformer CSA to UL 1585	24VAC-40VA	$38.00

DC Plug-In Power Supply

1-5/8"W x 3"H x 1-3/8"D (41mm x 76mm x 35mm)

Model	Description	Output Voltage / Power	List Price
T1003	Plug-In/UL Power Supply	12VDC-1.5A	$53.00

Bridge Rectifiers

10R1, 10R1-6: 3/16"D x 3/8"Dia. (4.75mm x 9.5mm)
10R3, 10R3-6: 1/4"D x 5/8"Sq. (6.4mm x 16mm)

Model	Description	Output Voltage / Power	List Price
10R1	Rectifier	1A	$5.00
10R1-6	Rectifier with 6" leads	1A	$17.00
10R3	Rectifier	3A	$9.00
10R3-6	Rectifier with 6" lead	3A	$21.00

Door Controllers & Peripherals

Keyscan LUNA™ SDACSKT Single Door Access Control Smart Kit

The combination of AC unit, one reader, 10 credentials, power supply and comprehensive software, brings affordable access control security, accountability, and reporting to small businesses for a fraction of the cost of other comparable systems.

Keyscan LUNA™ Single Door Access Control Smart Kit		List Price
SDACSKT	Single door access control smart kit	$1,171.43

K-SMART3 13.56MHz Reader Series Keyscan Smartcard BLE Reader

This Keyscan BLE-ready smartcard reader is a 13.56 high frequency reader that offers users the convenience of using smartcards and the new K-BLE mobile credentials. It features additional support for a built-in "heartbeat" that monitors the reader communication advising end-users if any type of optional reader tamper or if the reader cable is cut. May not work with non-Keyscan access panels without purchase of optional K-PC2 programming card to disable enhanced features. Suitable for indoor and outdoor applications. Keyscan ACU requires System Firmware V 9.39 or higher for enhanced feature.

Keyscan 13.56MHz Reader Series Keyscan Smartcard BLE Reader		List Price
K-SMART3	Keyscan Smartcard BLE Reader	$528.57

Door Controllers & Peripherals

K-SECURE Ten Pack 1K ISO Contactless Secure Smartcard

The Keyscan K-SECURE 1K Series of printable (ISO) style of Contactless Smartcard is equipped with numerous anti-counterfeiting and card anti-duplication technologies and a robust AES multilayer encryption technology offering greater security. K-SECURE 1K complies with international interoperability (ISO14443) standards for 3rd party applications and is ISO printable. They are available in Keyscan 36-bit format for even more security over standard 26-bit 125kHz credentials which can be duplicated.

Keyscan Ten Pack - 1K ISO Contactless Secure Smartcard		List Price
K-SECURE1K10	Ten Pack - 1K ISO Contactless Secure Smartcard	$60.00

K-SECURE 1K Keyscan Mifare 1K Contactless Secure Smartcard

The Keyscan K-SECURE Series Contactless Smartcard is equipped with numerous anti-counterfeiting and card anti-duplication technologies and a robust AES multilayer encryption technology offering greater security.
K-SECURE complies with international interoperability (ISO14443) standards for 3rd party applications and is ISO printable. They are available in Keyscan 36-bit format for even more security over standard 26-bit 125kHz credentials which can be duplicated. Also available in 4K memory.

Keyscan Mifare 1K Contactless Secure Smartcard		List Price
K-SECURE 1K	1K Contactless Secure Smartcard	$340.51 (pack of 50)

Door Controllers & Peripherals

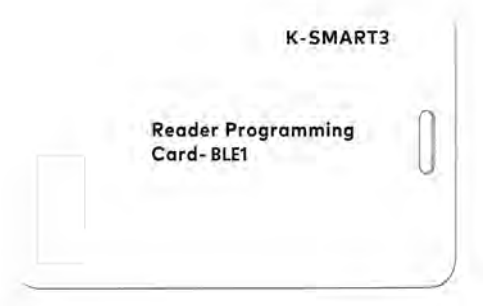

K-SMART Reader Programming Card

Optional reader read range programming cards may be presented to a properly installed, powered and functioning K-SMART3 reader after power up. Card will toggle the BLE read range settings to one of 4 settings - short, medium, long and maximum. Not required for default BLE operation on K-SMART3 readers. Works with all Keyscan default K-SMART3 site key readers.

Keyscan K-SMART3 Reader Programming Card		List Price
BLE1	K-SMART3 Programming Card	$32.91

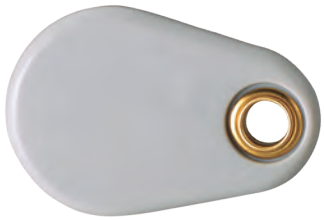

K-SF-1K Keyscan Smart Fob 1K

The Keyscan K-SECURE series Smart Fob offers the same functionality and high security of the K-SECURE contactless smartcard. It includes the same numerous anti-counterfeiting and anti-duplication technologies as well as the robust AES multi-layer encryption technology offering greater security. Keyscan smart Fob complies with international interoperability (ISO14443) standards for 3rd party applications. They are available in Keyscan 36-bit format for even more security. It is the ideal credential alternative to traditional card credentials.

Keyscan Smart Fob 1K		List Price
K-SF-1K	Keyscan Smart Fob 1K	$649.29 (pack of 50)

Door Controllers & Peripherals

SDRA Keyscan LUNA SDAC Replacement Antenna

Your Keyscan LUNA SDAC communicates via Wi-Fi through an antenna. This replacement SDAC antenna is approved and guaranteed to function with your Keyscan LUNA SDAC. Any other antenna purchased from any source may cause damage, unintended results or may not functional at all and will void your SDAC warranty.

Keyscan LUNA SDAC Replacement Antenna		List Price
SDRA	Keyscan LUNA SDAC Replacement Antenna	$27.20

PS1225 Replacement Plug-in 12VDC Transformer

The PS1225 is a replacement 12VDC plug-in switching transformer for the SDACSKT (SDAC Kit). Plugs into standard 120 Vac outlet and provides up to 2.5 amps. Has 60" of 18 Gauge cable for mounting close to SDAC control. Has 2.1 mm barrel power connector. Center positive. For replacement of transformer provided in the SDACSKT.
C/UL/US Listed
Black Colour

Replacement Plug-in 12VDC Transformer		List Price
PS1225	12VDC Transformer	$52.86

Terms & Conditions

Freight

Transportation and handling charges on all goods are prepaid by dormakaba USA Inc., and billed back to the customer, unless otherwise specified. Free freight will apply on all orders of USD$4000.00 net or more per purchase order within the continental United States, unless otherwise specified. Carrier to be selected by dormakaba USA Inc.; air freight and other requested shipments will be at the expense of the customer. Handling is added to freight.

Product Changes

dormakaba USA Inc.reserves the right to discontinue models and/or make changes at anytime in materials, parts, components, specification, etc., without notice and without incurring any obligations on models built prior to the change.

Shortages

A written claim for shortages must be made within 10 days after receipt of the order.

Templates

Templates are available for all standard products, special templates and wiring diagrams for custom orders are available upon request for a minimal fee.

Defective Products

Products that exhibit defects in any material and/or workmanship will be replaced by the factory upon verification by a local representative or the technical department atdormakaba USA Inc.. All returns must be issued a returned material authorization (RMA) number prior to being sent back to our facility. Returns can be done immediately or periodically, depending on the urgency. They will be addressed promptly. Warranty information is available upon request for individual products.

Cancelled Orders

Cancelled orders are subject to an additional charge. Cancellation will not be accepted of goods that are not regular stock items, such as special orders. Damage Claims – Title passes to the customer upon delivery to the carrier. Loss and damage claims must be filed with the carrier by the customer. Disputes with the carrier do not alter our payment terms and are the responsibility of the customer.

Credit Balance

Any resulting credit balance on a customer's account for returns or any reason other than dormakaba USA Inc. error, must be used as a credit against future purchases. Checks will not be issued to pay off a credit balance, other than due to dormakaba USA Inc. error.

Prices

Orders are accepted with the understanding that they will be billed at prices in effect at the time of shipment, except when firm prices have been quoted. Prices are subject to change without notice.

FOB

Prices are FO B our warehouse. Upon pick-up by the transportation company, shipments become the property of the purchaser, who assumes the risk of loss or damage in transit.

Payment Terms

Payment terms are NET 30 DAYS to customers with approved credit. Cash discount terms of 2% - 10 days are available unless otherwise stated. We reserve the right to withhold shipment to accounts that do not meet our payment terms. State sales tax is extra where applicable..

Returned Goods

Any defects or errors for which RCI is responsible for will be promptly rectified. Returned goods will not be accepted without prior approval and a returned material authorization (RMA) number, which must appear on all documentation relating to the returned merchandise. The original invoice number and purchase order number is required for all returns. All returns must be shipped with freight prepaid. Returned goods are subject to a minimum restocking charge of 20%. There may be additional charges to replace any abused or misused parts or components to restore the product to its original or saleable condition. Time limit for returning merchandise is 30 days after authorization, unless otherwise stated.

Special Order Returns

Returns of "Special Orders" will not be authorized.

C.O.D.

While processing a credit application, RCI may require your initial order C.O.D. We reserve the right to make C.O.D. shipments at our discretion.

Discounts

All discounts are subject to foreign exchange fluctuations, changes in import duties, and other applicable taxes.

E&OE

Errors and Omissions Excepted.

Minimum Charge

No minimum charges apply.

dormakaba Canada Inc.
65 Struck Court
Cambridge, ON Canada N1R 8L2
Tel: 800-265-6630
Fax: 800-482-9795
sales_RCI@dormakaba.com
www.dormakaba.us

RCIPB2019USA_ 05-19