INSTALLATION

940/950

DOOR SWITCHES

RUTHERFORD CONTROLS

In or Out... we make it Easy!®

940P, 940HP, 950P4, 950HP4

1. Connect leads supplied to desired contacts (i.e. com – N/C, com – N/O) on pushbutton.
2. Connect leads from contacts of pushbutton to leads in mounting box using wire connectors supplied.
3. Take 2 tamper resistant screws and screw into electrical gang box.
4. Push leads back into box and slide pushbutton over tamper resistant screw heads.
5. Tighten screws using the supplied allen key.

NOTE: Pushbutton fits in standard 3" x 2" electrical gang box.

940

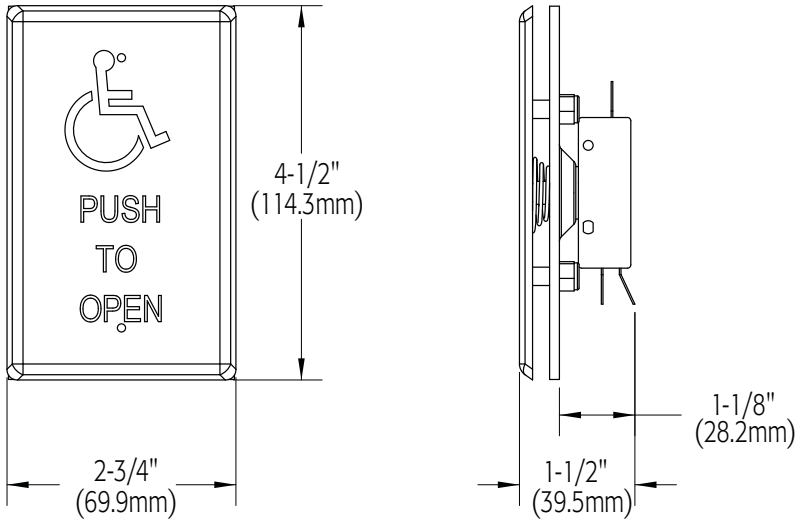

950

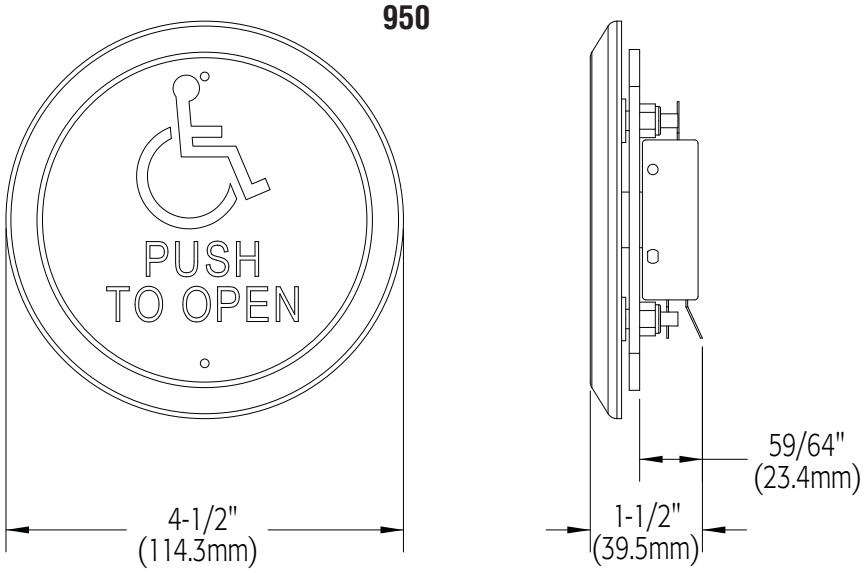

©2012 RUTHERFORD CONTROLS INT'L CORP. WWW.RUTHERFORDCONTROLS.COM

USA: 2517 SQUADRON COURT, SUITE 104, VIRGINIA BEACH, VA 23453 • CANADA: 210 SHEARSON CRESCENT, CAMBRIDGE, ON N1T 1J6
PHONE • 1.800.265.6630 • 519.621.7651 • FAX: 1.800.482.9795 • 519.621.7939• E-MAIL: SALES@RUTHERFORDCONTROLS.COM

PCN120003
R02/12SH

950P6

1. Connect leads supplied to desired contacts (i.e. com – N/C, com – N/O) on pushbutton.
2. Connect leads from contacts of pushbutton to leads in mounting box using wire connectors supplied.
3. Mount push button to a 4" x 4" electrical box.
4. Push leads back into box and slide pushbutton over tamper resistant screw heads.
5. Tighten screws using the supplied allen key.

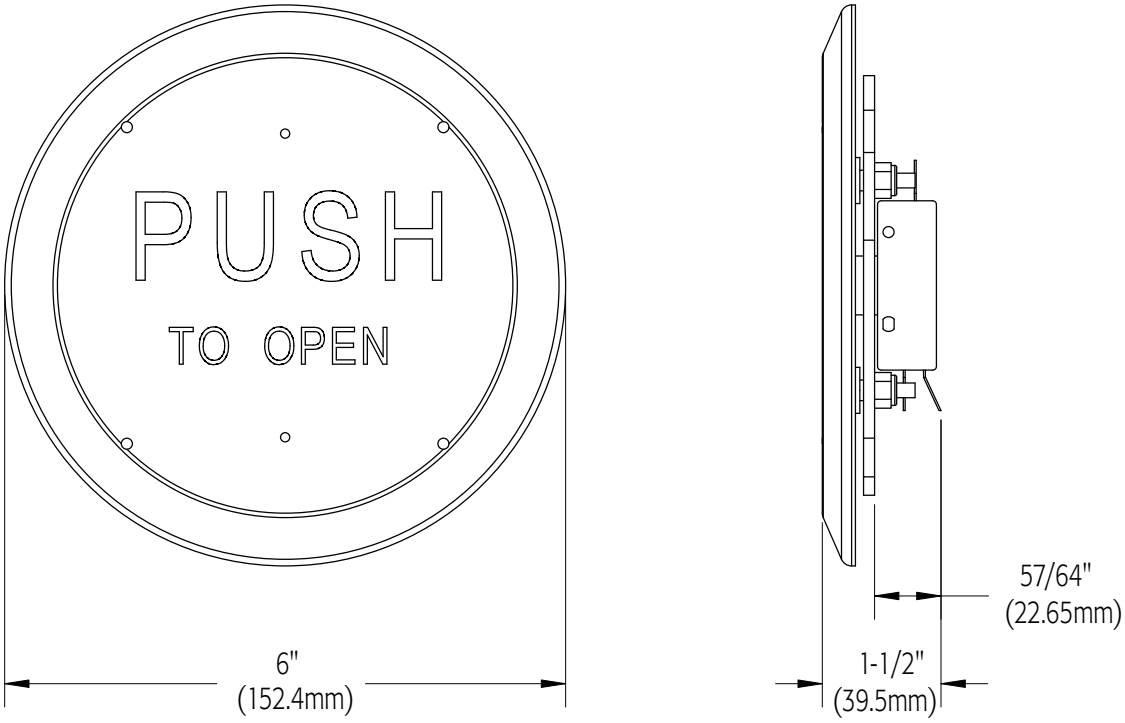

Options	940 Option Codes	950 Option Codes
DPDT Momentary Switch	DMO	SPDT
Escutcheons	N/A	ESC-4 (For 950P4/950HP4) ESC-6 (For 950P6/950HP6)
Surface Mount Box	SUR 940P/940HP SUR-N 940NP/940NHP	SUR-4 950P4/950HP4 SUR-6 950P6/950HP6
Wire-Mold Notch	N/A	WNN (for escutcheons)
Weather-Resistant Momentary Switch	WRMO	WRMO
Finishes	10 Brushed Light Bronze 10B/C40 Brushed Dark Bronze	10 Brushed Light Bronze 10B/C40 Brushed Dark Bronze

Switch Mode	Switch Configuration	Switch Rating	Standard Finish
Momentary Action	SPDT	10A @24V UL/CSA	32D

NOTE: Specifications are subject to change without notice.

©2012 RUTHERFORD CONTROLS INT'L CORP. WWW.RUTHERFORDCONTROLS.COM
USA: 2517 SQUADRON COURT, SUITE 104, VIRGINIA BEACH, VA 23453 • CANADA: 210 SHEARSON CRESCENT, CAMBRIDGE, ON N1T 1J6
PHONE • 1.800.265.6630 • 519.621.7651 • FAX: 1.800.482.9795 • 519.621.7939• E-MAIL: SALES@RUTHERFORDCONTROLS.COM