Cylinders & IC Products – Arrow Pointe

Classic Product

Arrow Pointe interchangeable core products offer dealers unlimited flexibility and keying options. Available in standard 6 and 7 pin format in Arrow and competitive keyways, dealers can install Arrow Pointe in new or existing key systems. Arrow's unique manufacturing process gives Arrow Pointe interchangeable cores unmatched strength and durability. The core features four main components: The plug, shell, sleeve and faceplate. Our precision engineering design, keying capability and availability make Arrow Pointe interchangeable cores our most specified brand for commercial, industrial and institutional applications.



7 PIN INTERCHANGEABLE CORE



6 PIN INTERCHANGEABLE CORE

ARROW POINTE INTERCHANGEABLE CORE

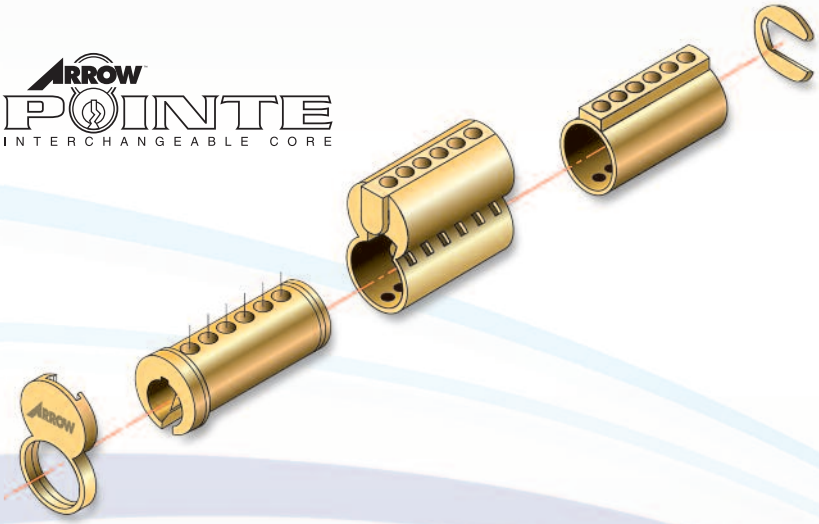

Features:

- Solid Brass Construction
- Reinforced Sleeve Design
- Combinated or Uncombinated
- US26D or US4 finish

Arrow Keyways:

- 1C & 1D Standard
- Competitive Keyways Available
- Restricted Keyways Available — Consult Factory

Cat No.	Description
100CR	6 Pin Combinated Core
100CR-UC	6 Pin Uncombinated Core
7100CR	7 Pin Combinated Core
7100CR-UC	7 Pin Uncombinated Core
C x Keyway	6/7 Pin Key Blank
CP x Keyway	6/7 Pin Key Blank, Plain Bow

Arrow & Competitor Keyways:



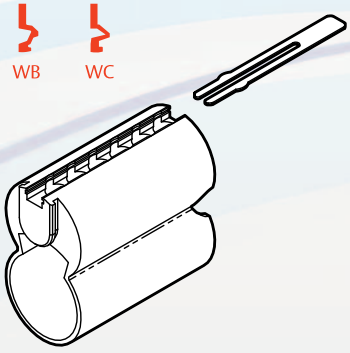

SFIC Cores With Alternate Slide Cover

Cat No.	Description
100SR	6 Pin Combinated Core
100SR-UC	6 Pin Uncombinated Core
7100SR	7 Pin Combinated Core
7100SR-UC	7 Pin Uncombinated Core