SUMO™ PERIMETER GATE LATCH
INSTALLATION INSTRUCTIONS

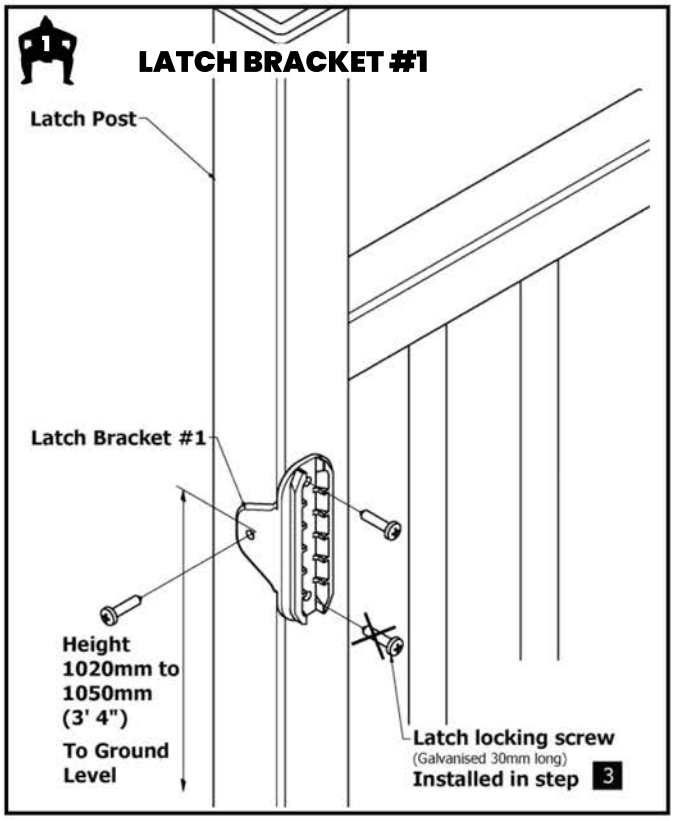

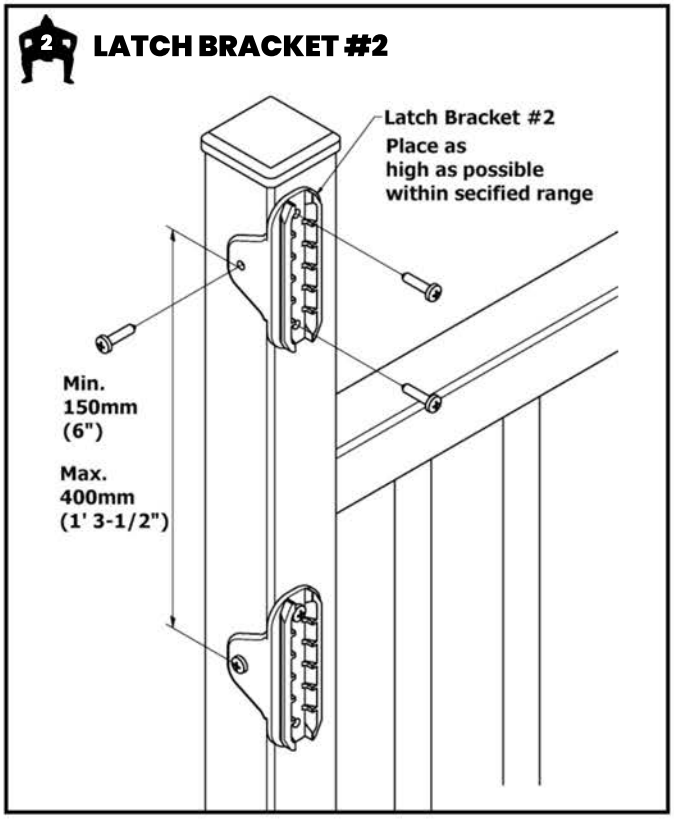

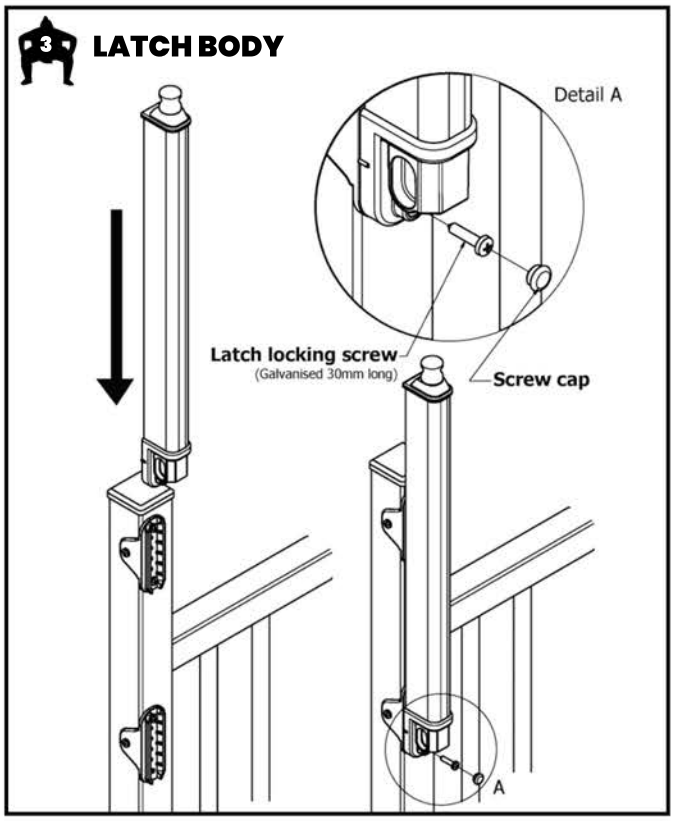

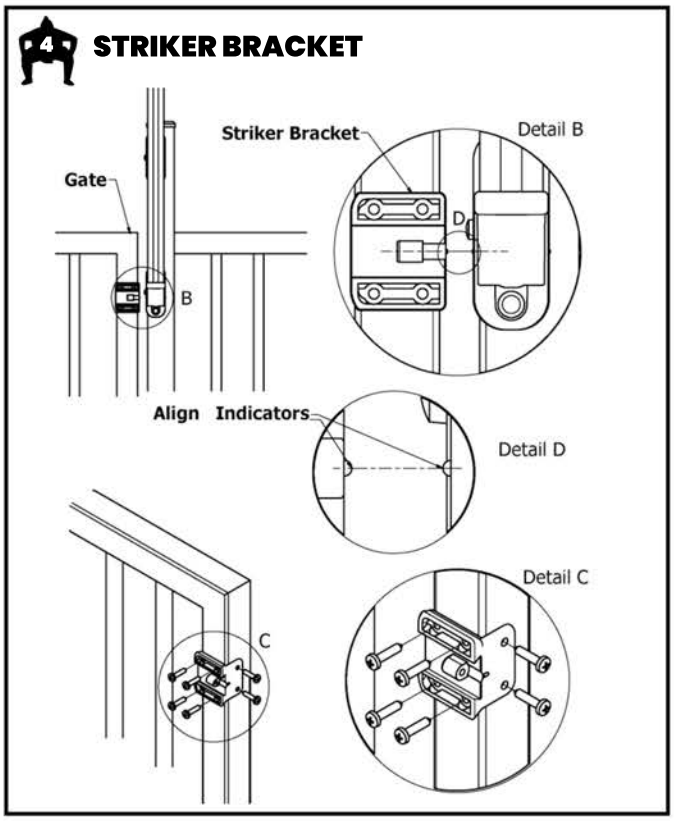

SUMOGATEHARDWARE.COM

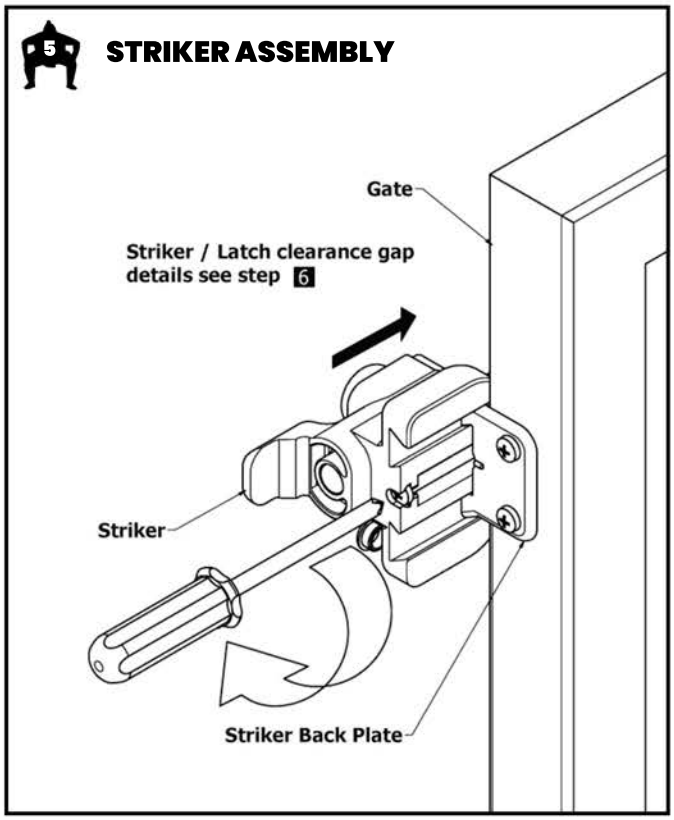

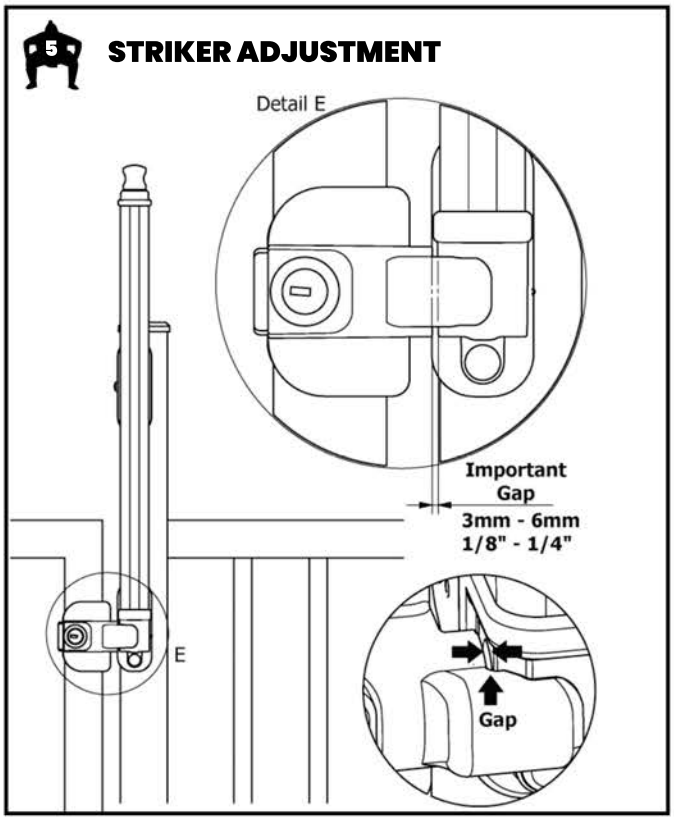

SUMO™ Hardware Limited Lifetime Warranty (this "Warranty")

1. Subject to the conditions and limitations set out below, SUMO™ Hardware ("SUMO™"), warrants that, for so long as the original purchaser of a product manufactured by SUMO™ owns that product (the "Product"), the Product will be free from all defects due to faulty design, materials or workmanship.
2. This Warranty is personal to the original purchaser of the Product, or to the first consumer where the Product has been purchased and installed by a contractor for the consumer's benefit, and is not transferable.
3. This Warranty does not apply in respect of defects due to or arising from:
(a) normal wear and tear;
(b) the failure to follow any procedures specified or recommended by SUMO™ for the installation, operation and maintenance of the Product;
(c) any act or circumstance beyond SUMO™'s control including tampering, unauthorized repairs or modifications, misuse, abuse, accident, damage in transit, damage caused by animals or natural events;
(d) any defect of or in any material to which the Product is attached; or
(e) the faulty workmanship of any person other than SUMO™, including the installer of the Product.
4. To claim under this Warranty:
(a) the purchaser must advise SUMO™ within 14 days of discovering a defect in the Product; and
(b) the purchaser must return the defective Product to SUMO™ or its agent, freight prepaid, together with proof of purchase.
5. SUMO™ will not, under this Warranty, be responsible for consequential damages (such as loss of use) inconvenience, loss or damage to personal property, whether direct, indirect or economic and whether arising in contract or tort. Under this Warranty SUMO™'s responsibility shall not exceed the purchase price of the component or its replacement.
6. Where a failure does not amount to a major failure, SUMO™ will provide, at SUMO™'s option a repair, replacement or refund for the hardware component of. If a product or component is no longer available and cannot be repaired, SUMO™ will, in its absolute discretion, replace the product with a substitute item.
7. No other express warranty or representation has been made or will be made on behalf of SUMO™ with respect to its hardware components, or the operation, repair or replacement of those components. No representative of SUMO™ or its distributors or retailers are authorized to make any changes or modifications to this Warranty.

This Warranty is provided by SUMO™ Hardware by LockeyUSA

Place latch on gate post to make sure that latch release knob is at least 1500mm (5ft) above ground level.
Always consult your local authority prior to installing this latch.
Must be installed in accordance with the local fence / barrier codes and regulations.
Use key only when striker and latch are engaged with each other. Remove key from lock after use.
Maintain latch regularly, making sure that latch release knob, striker bolt and other moving parts are free from debris.
This latch will operate correctly only if installed and maintained in accordance with SUMO™ Hardware instructions.

SUMOGATEHARDWARE.COM

For technical support, contact support@lockeyusa.com or call 888.395.0163.