SECURITRON POWER SUPPLY BOARD MODELS PS-12-1M,-PS-24-1M OPERATION AND INSTALLATION INSTRUCTIONS

1. DESCRIPTION

Securitron's Model PS-12-1M is a 12 volt, 1 amp power supply board which converts 12-14 AC voltage from a separately supplied transformer to adjustable, regulated DC voltage. The PS-24-1M is the equivalent for 24-28 volts. The boards also include integral sealed lead acid/gel cell battery charging capability. The DC output of these boards meets **Class 2** electrical requirements, which means under the National Electrical Code that output wiring need not be in conduit. Always **check with your local building department** to make sure you are complying with applicable wiring codes before installing these units.

2. SAFETY

The battery output of the boards (when implemented) presents a high energy hazard. If shorted, the battery output can generate sufficient heat to ignite some materials. To insure safety, insure that the board is mounted only in a lockable, approved enclosure which is accessible only by trained service personnel.

3. OPERATING CHARACTERISTICS

3.1 TRANSFORMER CONNECTIONS

The transformer output (secondary) terminals connect to the low voltage AC input terminals on the circuit boards (see Figure 2). There is **no polarity to this connection**. Specified performance in terms of capacity will occur when (respectively) **14 volt and 28 volt transformers with at least 1.5 Amp secondaries** are used. Transformers often are rated by their output capacity in **Volt-Amps** and this figure is derived by multiplying the output voltage by the output (secondary) current capacity in Amps. So, for example, a 14 volt transformer with 1.5 Amp capacity secondary output would carry a volt-amp rating of 21 VA. For a 28 volt transformer, the minimum VA rating would be 42.

Transformers with 12 and 24 volt outputs may be used (they are more readily available) without problem, but the output capacity of the boards must be de-rated by 25%.

3.2 DC OUTPUT AND VOLTAGE ADJUSTMENT

The DC capacity of the boards depends on the exact voltage that is set, on whether or not batteries are employed and on the fact that correct low voltage AC is supplied to the boards (14 or 28 volts). The boards can output 1 Amp when set at precisely 12 or 24 VDC. However, we recommend that supplies not be operated at maximum capacity. This reduces the possibility of heat induced failure and also allows for later expansion of the installation. **When the boards are used with batteries, available current capacity is reduced.** This is because the voltage must be set higher to 13.5 or 27 volts (these are the factory set values) and also because some current is used to charge the batteries. **900 mA should be considered the maximum output of a board used with batteries.**

3.3 BATTERY CHARGING CAPABILITY

The boards incorporate a battery charging circuit appropriate for standby rated sealed lead acid or gel cell batteries. **Dry cell or NICAD batteries must not be used.** Batteries are an option. The power supply can be used with or without them. The battery pack of the appropriate voltage is merely connected to the red and black battery leads following correct polarity. The batteries will be kept charged at all times by the power supply acting in concert with the components on the board. In the event of a line voltage power failure, the batteries will automatically drive the load. If the emergency release terminals are opened, battery power will, however, be cut off just as normal power from the power supply would be.

© Copyright, 2011, all rights reserved

FIG. 1 BATTERY PACK SELECTION

CHART TO DETERMINE SIZE OF BATTERY PACK

BACKUP TIME DESIRED

CURRENT DRAWN	MIN	1 HR	2 HR	4 HR	UL STD.	8 HR	16 HR	24 HR	48 HR	72 HR
150 MA	4 AH	4 AH	4 AH	4 AH	4 AH	4 AH	4 AH	8 AH	8 AH	12 AH
300 MA	4 AH	4 AH	4 AH	4 AH	4 AH	4 AH	8 AH	12 AH	16 AH	*N/A*
500 MA	4 AH	4 AH	4 AH	4 AH	4 AH	8 AH	12 AH	16 AH	*N/A*	*N/A*
750 MA	4 AH	4 AH	4 AH	8 AH	12 AH	12 AH	16 AH	20 AH	*N/A*	*N/A*

"MIN" TIME REFERS TO FACILITY USING EMERGENCY GENERATOR WHERE THE BATTERIES ARE ONLY REQUIRED TO OPERATE THE SYSTEM FOR UNDER 3 MINUTES UNTIL THE GENERATOR TAKES OVER

U.L. STANDARD REQUIRES 4 HOURS OF BATTERY OPERATION FOLLOWED BY A 24 HOUR RECHARGE PERIOD AND THEN A SECOND 4 HOURS OF OPERATION

BATTERIES MUST BE SEALED LEAD ACID OR GEL CELL TYPES. DRY CELLS WILL NOT RECHARGE AND WILL BE DAMAGED.

THIS CHART IS ONLY VALID IF BATTERIES ARE OPERATED AT ROOM TEMPERATURE. IN A COLD ENVIRONMENT, CAPACITY IS REDUCED.

BATTERIES SHOULD BE REPLACED AFTER 5 YEARS OF USE.

The components utilized on the unit for battery charging function for battery packs up to 20 amp hours in capacity whether 12 or 24 volts. Note that certain long backup times are not achievable with the maximum size of the battery packs ("N/A" appears in the chart). Consult the battery pack chart to calculate the correct battery pack based on desired backup time and the current drawn by the load. **Note that for proper battery charging the power supply must be set at 27 volts** in the case of a **24 volt system, and 13.5 volts** in the case of a **12 volt system.** The boards are capable of this adjustment and if it is not made, the batteries will not hold their full capacity nor their normal operating life, and may be damaged. **Also note that batteries must be replaced at least every 5 years as that is their maximum operating life.**

3.4 CIRCUIT POLYSWITCH

The boards are internally protected against overloads (they will shut down). A DC short, therefore, cannot damage the board but still will cause problems as the load will be shut off. On the other hand, if batteries are used, they will switch into the short when the board shuts down and will supply a tremendous amount of current into a short which is capable of melting wire insulation. To protect against a short circuit when batteries are being employed, a **2.5 Amp DC Polyswitch** breaker is provided. The Polyswitch functions as an automatic circuit breaker. If it receives an overload, it rapidly cuts the current down to a small leakage current (about 100 mA). If this happens there is a **reset procedure. All current must be removed from the Polyswitch for a period of 10 seconds**. You do this by simply disconnecting the wire from the "+" or "-" terminal. If, for example, a short circuit appeared which tripped the Polyswitch and you corrected the short but did not disconnect the wire from the "-" terminal, the Polyswitch would "see" the normal load and would continue to block current flow until reset in the manner just described.

FIG. 2: WIRING

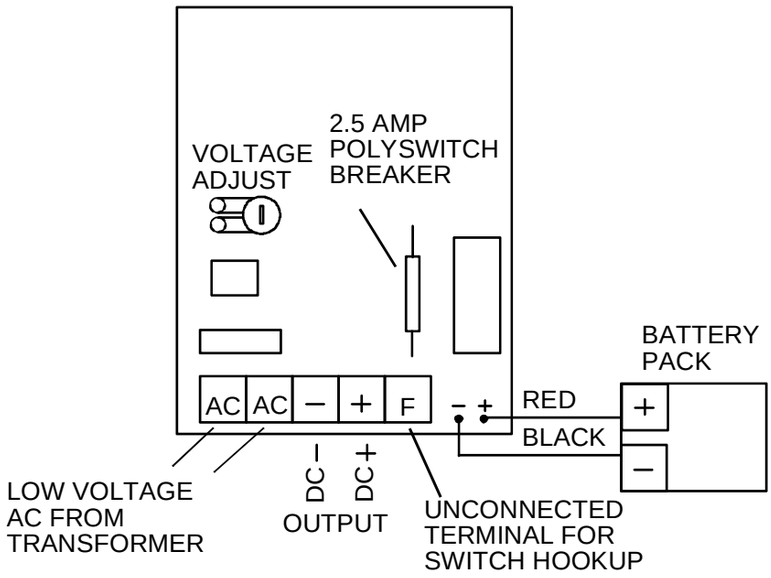

3.5 EMERGENCY RELEASE

Emergency release of DC output at the board is most easily accomplished by using the unconnected "F" terminal. Connect the NC contacts of the release switch between "+" and "F" and then connect the load to "-" and "F". When the emergency release contacts open, all DC power will be cut off. When the connection is to a UL listed fire alarm system, use **auxiliary latching normally closed contacts with contact ratings of at least 2 Amps.** Do not use "trouble" contacts. Note the drawing to the right.

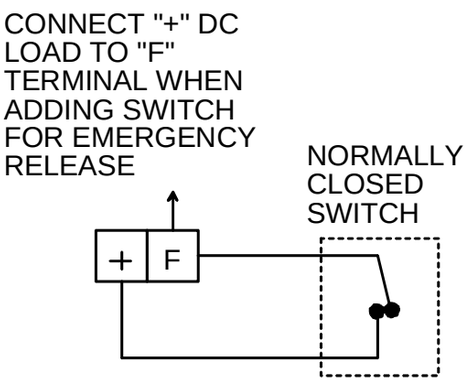

4. MAGNACARE® LIFETIME REPLACEMENT WARRANTY

For warranty information visit: www.securitron.com/en/site/securitron/About/MagnaCare-Warranty/

PN# 500-20400
Rev. D, 08/11