SECURITRON PB5E EXIT BUTTON
INSTALLATION AND OPERATING INSTRUCTIONS

1. DESCRIPTION

The model PB5E is a spring loaded momentary 2" diameter, exit button, mounted on a stainless steel single gang outlet box cover. The DPDT contacts switch when the button is depressed and return when it is released. The contacts are UL listed with 5 AMP capacity. The PB5E can be used for momentary release of fail safe or fail secure electric locks. If interfaced with a release hold timer, it can provide for timed release of electric locks. It may also be used to input a REX (request to exit) signal to a card reader system. We recommend that the local building or fire safety authority be consulted prior to using exit buttons for door egress. They may require a "no special knowledge" exit device such as Securitron's Touch Sense Bar.

2. INSTALLATION

As the PB5E is an economy version, it is supplied without a retro-fit wall mounting device and without hookup wire. Connection is made via .250" quick connect terminals found on the rear of the unit. To connect these terminals, the installer may use push on connectors to which wires are crimped or wires may be directly soldered to the terminals through the hole provided. If a back box is used, the installer should select a box with minimum depth of 2 1/2". The drawing below shows identification of the switch's common, normally closed and normally open terminals. Note, however that an end view of one contact block is shown. The unit has a double pole, double throw output so there is a second block affixed next to the first with the contacts in the same orientation.

MODEL PB5E: IDENTIFICATION OF CONTACTS

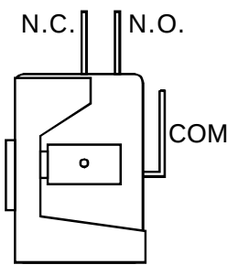

NOTE: There are two contact blocks mounted next to each other. The termainal I.D. Is the same on both blocks (one is shown in the drawing to the left.)

TERMINAL TYPE: .250” QUICK CONNECT

3. SWITCH ILLUMINATION OPTION

The PB2-LK is a field installable illumination kit intended for the PB2E/PB5E/EEB2 series pushbuttons which includes the LED, wires and instructions needed to add illumination to the switch.

4. WIRING

The PB5E can be used in many different ways but the drawings below show three common applications. The first shows momentary release of a fail safe or fail secure electric lock. The second drawing shows timed release of a fail safe electric lock using the PB5E and Securitron's TimeMate. Momentarily pressing the button will release the lock for the amount of time set on the TimeMate. The wiring is also done in double break fashion so that even if the timer fails, the button will still be able to momentarily release the lock. This is for added safety. The third drawing shows interface of the PB5E with an access control system such that a fail safe lock (generally a magnetic lock) is released for the amount of time programmed into the system in safe, double break fashion. In this third application, both poles of the PB5E are required. The NC contacts of the PB5E are connected in series with the NC contacts of the access control system’s lock control relay and the NO contacts of the PB5E connect to the REX input terminals of the access control system such that when the button is pressed, the access control system will operate its relay thereby releasing the lock and allowing egress. But if the access control

© Copyright, 2011, all rights reserved

system experiences an electronic failure, the PB5E contacts will still directly release the fail safe lock for as long as the button is held pressed.

MOMENTARY RELEASE OF FAIL SAFE OR FAIL SECURE ELECTRIC LOCK

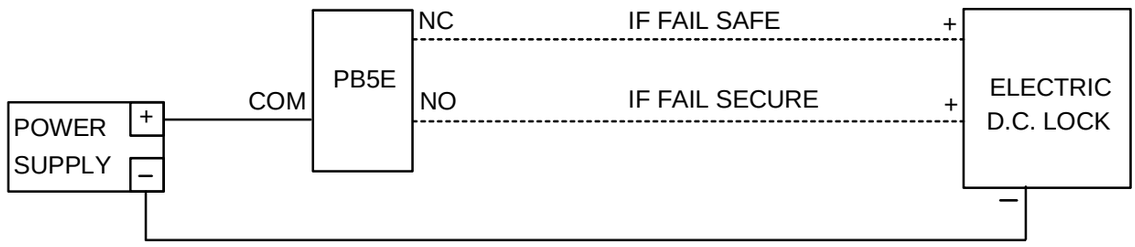

TIMED DOUBLE BREAK RELEASE OF FAIL SAFE LOCK

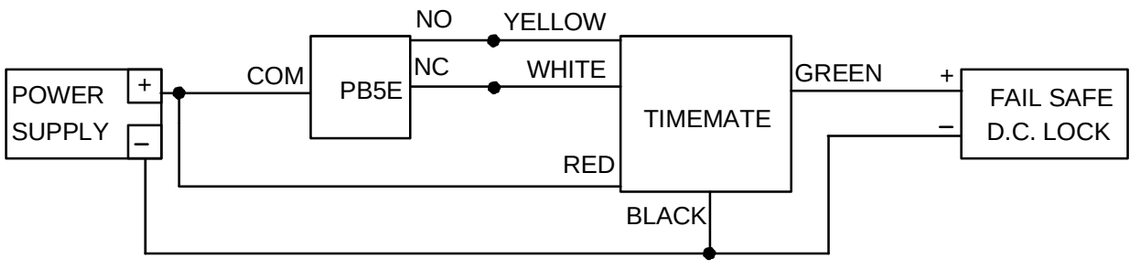

TIMED DOUBLE BREAK: FAIL SAFE LOCK USED WITH ACCESS SYSTEM

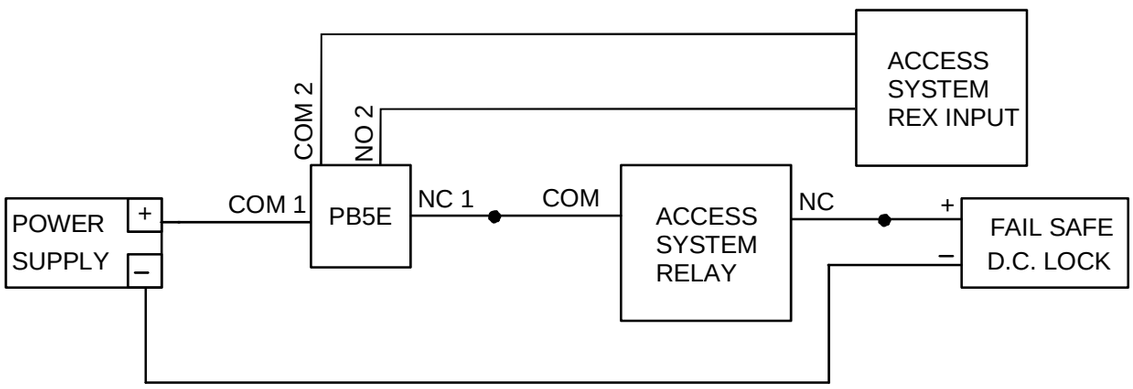

5. ALTERNATE LENS CHANGING

The pushbutton is factory shipped with the red lens set installed and two lens/insert options. Changing to the other lens sets is simple.

1) Grasp keyplate and turn over. From the back rotate the white contact block of the switch counter-clockwise to the 11 o'clock position and pull straight back to remove the contact block.
2) With a slender smooth ended object such as a marker pen, slide it inside the switch body. With the object inserted in the switch up against the lens, place the object on a smooth surface with the keyplate on top, and tap the keyplate up and down on the object to pop the lens off. Remove the lens and insert.
3) Turn the keyplate over and place the new insert onto front of switch, confirm that the text on the insert is correct reading to the keyplate and place the matching colour lens on top of the insert and compress around all edges of the lens until it snaps in place. Depress lens several more times to ensure smooth operation and that the lens is not binding.
4) With the terminals upward insert the contact block back into the back of the switch at the 11 o'clock position and rotate clockwise until it stops straight up and down.