# 1.0 Wiring and Layout Diagrams

## 1.1 NXT-2D/-4D Controller

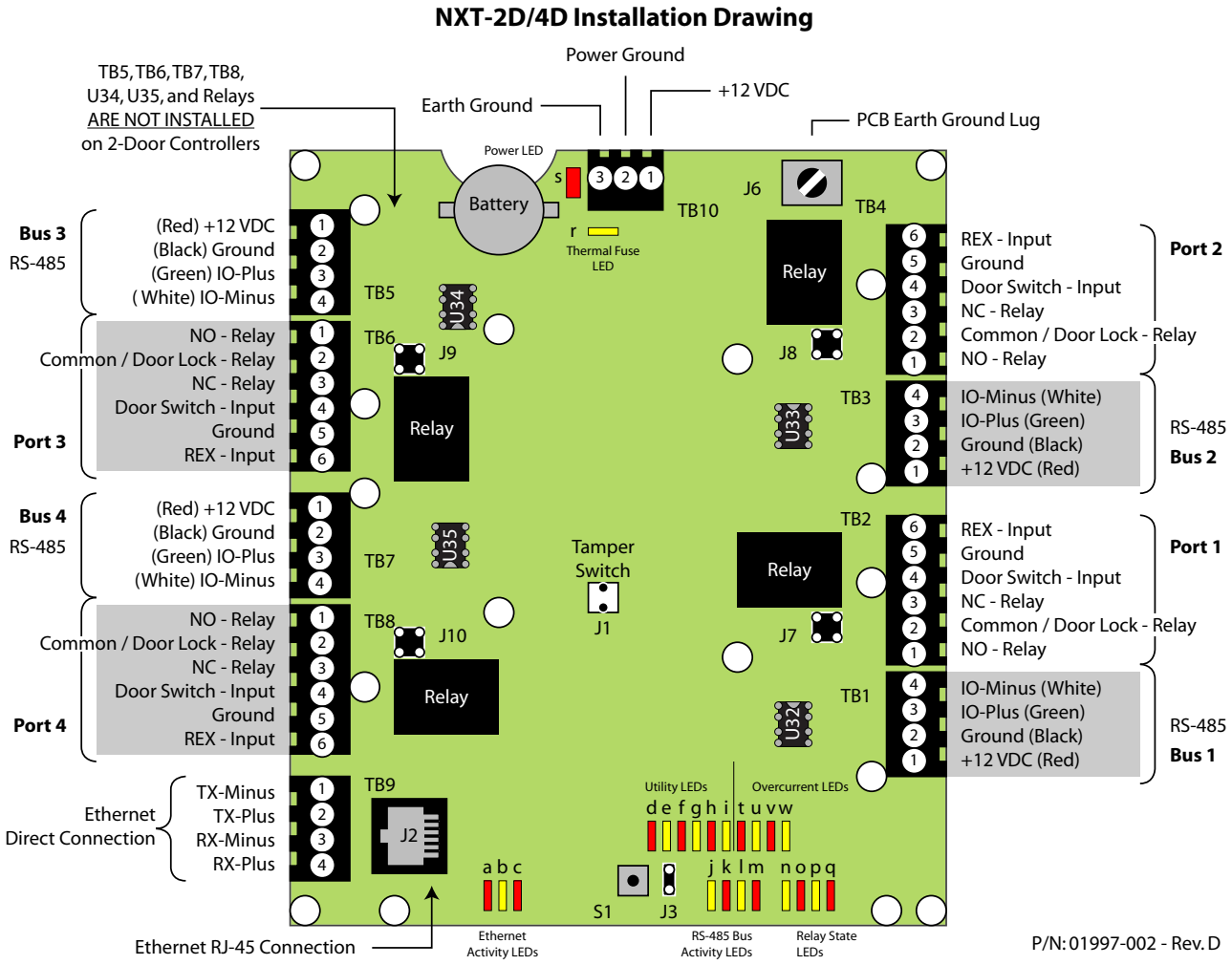


See Table 1 on page 2 for LED definitions.

*NOTE: This equipment has been tested and found to comply with the limits for a Class A digital device, pursuant to Part 15 of the FCC Rules. These limits are designed to provide reasonable protection against harmful interference when the equipment is operated in a commercial environment. This equipment generates, uses, and can radiate radio frequency energy and, if not installed and used in accordance with the instruction manual, may cause harmful interference to radio communications. Operation of this equipment in a residential area may cause harmful interference in which case the owner will be required to correct the interference at the owner's expense.*

## 1.2 LED Definitions Table

**Table 1: NXT Controller LEDs [a]**

| Ethernet Comm | Purpose | LED | Relay State | Purpose | LED |
|---|---|---|---|---|---|
| | 10/100 | a (D21) | | Relay 1 active | n (D3) |
| | Link | b (D22) | | Relay 2 active | o (D8) |
| | Activity | c (D33) | | Relay 3 active | p (D13) |
| **Utility** | **Purpose** | **LED** | | Relay 4 active | q (D18) |
| | Standard FW Config Reset | d (D48) | **Power** | **Purpose** | **LED** |
| | Host Channel Active | e (D49) | | indicator | r (D26) |
| | Firmware Upgrade | f (D50) | | | |
| | Event Channel Active | g (D51) | **Thermal Fuse [b]** | **Purpose** | **LED** |
| | unused | h (D52) | | indicator | s (D23) |
| | Mercury FW Config Reset | i (D53) | | | |
| **RS-485 Bus** | **Purpose** | **LED** | **RS-485 Bus [c]** | **Purpose** | **LED** |
| | Bus 1 Tx | j (D1) | | Bus 1 Over Current | t (D54) |
| | Bus 2 Tx | k (D6) | | Bus 2 Over Current | u (D55) |
| | Bus 3 Tx | l (D11) | | Bus 3 Over Current | v (D56) |
| | Bus 4 Tx | m (D16) | | Bus 4 Over Current | w (D57) |

a. PCBs at revision F or greater have the RS-485 Bus Over Current LEDs **t**, **u**, **v**, and **w**. PCB revisions earlier than revision F do NOT have these LEDs.
b. If LED **s** is **green**, the power wires are reversed; if LED **s** is **red**, the unit is drawing too much current.
c. If LED **t**, **u**, **v**, or **w** is **red**, that individual bus is drawing too much current and the bus is shut down to protect the controller. When this condition is corrected, the LED will turn off and the bus will be activated.

## 1.3 Port Protection

Transorbs are provided with the controller ship kit. They are used to protect the controller from voltage spikes induced on the port wiring by absorbing the excess voltage and slowly releasing it back into the circuit. Keri strongly recommends wiring in the transorbs provided with the controller ship kit. Refer to the Transorb Wiring Diagram below.

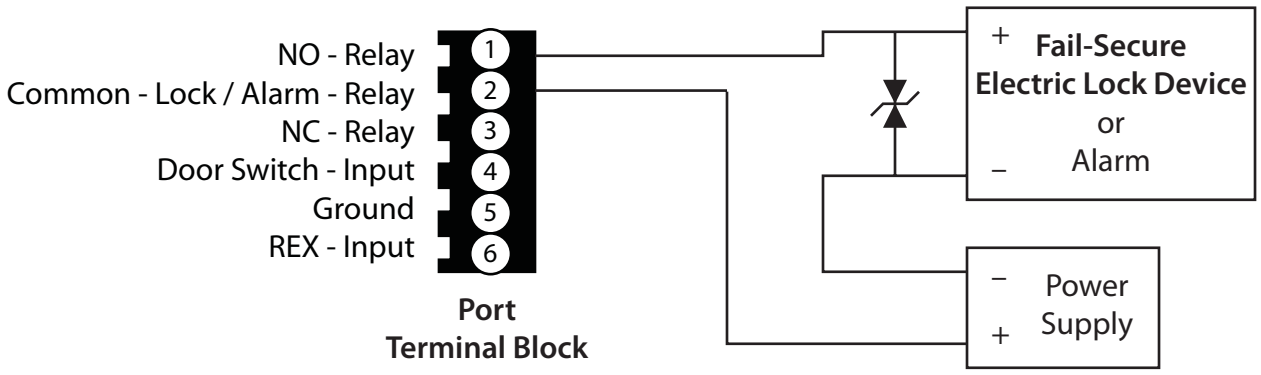


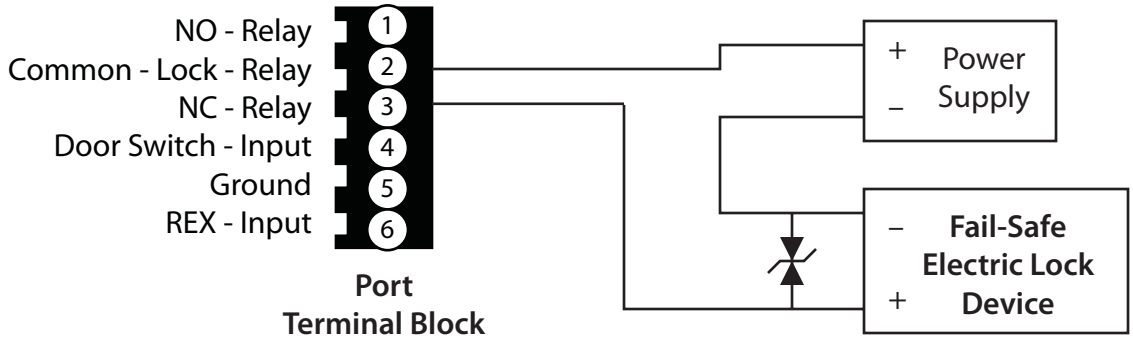


*NOTE: The Transorbs that Keri provides are **non-polar**; they can be installed in either orientation.*

## 1.4 Isolation Relays

For locking devices that may induce heavy voltage spikes – Mag Locks and devices with heavy-duty solenoids such as turnstiles, vehicle gates, and overhead doors – Keri recommends using isolation relays. Keri has an Isolation Relay Kit (p/n IRP-1). Please refer to the IRP-1 Isolation Relay Installation Guide (p/n 01833-001) for detailed information.

# 2.0 Specifications

## 2.1 NXT-2D/-4D Dimensions

- NXT Controller PCB
  - 6.50 inches high by 5.50 inches wide by 1.00 inch deep, not including wiring connectors
  - 16.51 cm by 13.97 cm by 2.54 cm
- NXT Enclosure
  - 13.00 inches high by 10.5 inches wide by 3.00 inches deep
  - 33.02 cm by 26.67 cm by 7.62 cm

## 2.2 Linear Power Supply Requirements

- 10 to 14 VDC @ 2.5 A (maximum current draw for a fully loaded NXT-2D/-4D controller)

## 2.3 Current Requirements at 12 VDC

- 650 mA max for an NXT-4D Controller
- 570 mA max for an NXT-2D Controller
- 250 mA max for each NXT-4x4
- 120 mA max for each NXT-1R, NXT-3R, NXT-4R, or NXT-5R Reader
- 115 mA max for each NXT-6RK Reader
- 100 mA max for each NXT-RM Reader Interface Module

*NOTE: Keri recommends using separate power supplies for the controller and the electronic locking device (magnetic lock, door strike, etc.). Only linear power supplies or Keri approved switching power supplies should be used for the controller (refer to the Recommended Peripherals document – p/n 01924-001). Use isolation relays (Keri p/n IRP-1) between the controller and the electronic locking device to prevent spikes or surges from the locking device from affecting the controller.*

## 2.4 Relay Contact Rating

- 1 A @ 24 VDC

## 2.5 Operating Conditions

- 32°F to 150°F (0°C to 60°C) – 0% to 90% Relative Humidity, non-condensing

## 2.6 Battery/Memory Retention

- 5-year lithium battery backup to support controller RAM and real-time clock

## 2.7 Cable Options

RS-485 bus runs can daisy-chain together an NXT-4x4 and NXT-Reader on one line. The total cable run distance should be no more than 500 feet from the NXT controller for runs with 4x4s and no more than 1,000 feet for Reader-only runs. Refer to Table 2 on page 5 and Table 3 on page 5.

*NOTE: Cable resistance causes a drop in voltage at the end of long cable runs. Ensure the appropriate power and current for your device is available **at the device** at the end of the cable run. Heavier gauge cable reduces this effect.*

*NOTE: Keri does not recommend hot-plugging a Reader, RIM, or 4x4 into an NXT controller. Remove power from the controller prior to connecting these devices.*

**Table 2: Reader and 4x4 Cable Options**

| Connection Type | Total Run Length | Minimum AWG | Shielded, Stranded, 2 Twisted-Pair[a] | CAT-5[b] | Shielded, Stranded, 4-Conductor[c] |
|---|---|---|---|---|---|
| | | | Suggest | | Suggest |
| RS-485 bus from NXT-2D/-4D to NXT-4x4 only | up to 500 feet | 18 - Power 22 - Data | Belden 8723 | shielded | Windy City: 414302-S Tappan: 1880AB4M-CM |
| RS-485 bus from NXT-2D/-4D to NXT-4x4 and NXT Readers | up to 500 feet | 18 - Power 22 - Data | Belden 8723 | shielded | Windy City: 414302-S Tappan: 1880AB4M-CM |
| RS-485 bus from NXT-2D/-4D to NXT Readers only | up to 1,000 feet | 18 - Power 22 - Data | Belden 8723 | shielded | Windy City: 416303-S Tappan: 2280AB4M-CM |

a. Keri recommends this cable type for best system performance.
b. Keri's preferred low-cost option. Keri has no suggested vendor for this type of cable.
c. Use care when routing this type of cable as it can make the system more susceptible to EMI.

**Table 3: Controller Power, Inputs, and Outputs Cable Requirements**

| Connection | Total Run Length | # of Conductors | Shielded | Stranded | AWG | Belden Equivalent |
|---|---|---|---|---|---|---|
| controller power | 250 feet[a] | 2 | N | Y | 18 | 8461 |
| earth ground | shortest path[b] | 1 | N | N | 18 | no specific requirement |
| inputs and outputs[c] | 500 feet | 2 | N | Y | 22 | no specific requirement |

a. To meet CE and C-tick regulations, the length of the controller power line can be no longer than 3 Meters (9.85 feet).
b. Use the shortest possible path from earth ground point to PCB. Connect the earth ground only to the designated pin on the terminal block. This is important as all transient protection for the unit is made through this earth ground connection. For unit protection, the earth ground connection should always be made first.
c. Values listed are minimums. Individual input and output devices may have more specific requirements.

# 3.0 Resetting Controllers

Keri recommends resetting NXT controllers the first time these controllers are powered on. Also, under certain circumstances NXT controllers may need to be reset.

*NOTE: Resetting a standard NXT controller will restore the controller to a factory default state. It removes all network configuration data assigned to the controller such as the IP Address, Subnet Mask, and Gateway address.*

## 3.1 Reset a Standard NXT Controller

1. Remove power from the NXT controller.
2. Ensure a Jumper is across the J3 header (refer to the drawing on page 1). The Jumper can remain on J3 at all times.
3. Press the S1 switch and hold it down while applying power. Keep the button pressed until the Reset LED (D48) is lit. This indicates the reset routine has begun. Once the LED is lit, the button can be released.
4. DO NOT REMOVE POWER FROM THE NXT CONTROLLER WHILE THE RESET LED IS LIT.
5. The Reset is complete when the Reset LED goes off.

## 3.2 Restore Configuration Information to a Reset Controller

1. In Doors.NET under Setup > Hardware Setup > Panels, click on the controller that was reset.
2. When the Communication field shows the controller is Online click the Update Network icon on the ribbon bar.
3. Click the Live Events tab and watch for the Update Network Completed event message. When this message is posted the controller's configuration information is restored.

# 4.0 Contact Keri Systems

| Keri USA | Keri UK, Ireland, Europe |
|---|---|
| 2305 Bering Drive<br>San Jose, CA 95131 | Unit 17<br>Park Farm Industrial Estate<br>Ermine Street<br>Buntingford<br>Herts SG9 9AZ UK |
| Telephone: (800) 260-5265<br>(408) 435-8400 | Telephone: + 44 (0) 1763 273 243 |
| Fax: (408) 577-1792 | Fax: + 44 (0) 1763 274 106 |
| Web: www.kerisys.com | Web: www.kerisystems.co.uk |
| E-mail: sales@kerisys.com<br>techsupport@kerisys.com | E-mail: sales@kerisystems.co.uk<br>tech-support@kerisystems.co.uk |

End of document.