NXT - 2D

2 Door / 4 Reader TCP/IP Controller



DATA SHEET

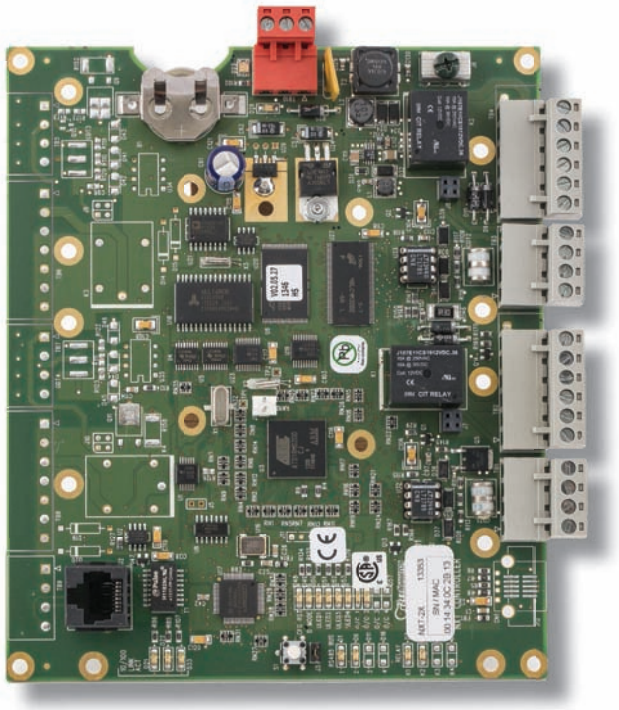

Note:
Controller shown without included enclosure.

- 2 Door/4 Reader Controller for Keri's NXT product line
- On-board TCP/IP connectivity – no network adapters required
- Manages 2 doors with In/Out capability when using NXT Readers
- Utilize existing LAN/WAN/Ethernet or pull your own dedicated CAT-5/6 Network
- Embedded MAC Address for one button Auto-Configuration
- Standard 4 Pin Block and RJ-45 Jack built-in for network connection
- Re-assignable Inputs and Outputs
- Quick Disconnect Connectors
- 50,000 Cardholders, 10,000 Event Buffer
- Locking Metal Enclosure (no-enclosure option)
- 128 Bit Encryption
- **Keri offers NXT Controllers with optional Mercury Firmware to provide enhanced functionality**

The **NXT-2D Controller** is built for today's IT environments. By using an existing TCP/IP network, controller cabling costs can be eliminated. Or, if building a new network, they can be reduced up to 50% over traditional hard-wired access systems by using inexpensive, CAT-5 cable. The NXT-2D is designed to be extremely intelligent with little reliance on network traffic for decision making, allowing it to be thrifty with any network's valuable bandwidth. With Ethernet functionality built directly into the controller, Keri's proprietary MAC addressing scheme allows for reliable hardware discovery and true one-button autoconfiguration.

To expand the system's flexibility, up to two companion 4X4 Input/Output boards (NXT-4X4) can be added - one to each of the controller's RS-485 trunks (buses). Customers can choose between Keri's line of highly secure, 4-wire NXT Series Proximity Readers with reader supervision that also provide In/Out reading capability (4 Readers), or any reader with a standard Wiegand output or Keri's MS Series Proximity Readers via the NXT-RM3 Reader Interface Module. To manage the system, Doors.NET software has much of the same look and feel as Keri's acclaimed original Doors™ software, but with the added functionality of a Client/Server architecture.

KERISYSTEMS INCORPORATED

2305 Bering Drive • San Jose, California 95131
408-435-8400 • Toll Free: 800-260-5265 • Fax: 408-577-1792

email: sales@kerisys.com • web: www.kerisys.com

NXT 2D - 2 Door / 4 Reader TCP/IP Controller

DATA SHEET, *Page 2 of 2*

Specifications:

Size (Enclosure):
13.125" H x 10.625" W x 3.06" D
(33.34 cm x 26.99 cm x 7.77 cm)

Size (PC Board):
5.6" H x 6.6" W x 2.55" D
(14.28 cm x 16.83 cm x 2.55 cm)

Weight (In Enclosure):
4.95 Lbs (2.25 Kgs)

Input Voltage:
+ 12 VDC nom. (10 - 14 VDC)

Current Draw:
570 mA typical

Inputs (4, reassignable):
Door Contact Switch (2)
Request to Exit (2)
Expandable up to 12 Inputs

Outputs (2, reassignable):
1.0 amp (24 VDC max.) dry circuit
Expandable up to 10 Outputs

Reader Capacity:
4 with NXT Readers *
2 with Wiegand or MS Readers
** 4 Reader capacity requires the Mercury Firmware option and NXT Readers*

NXT-2D Installation Drawing

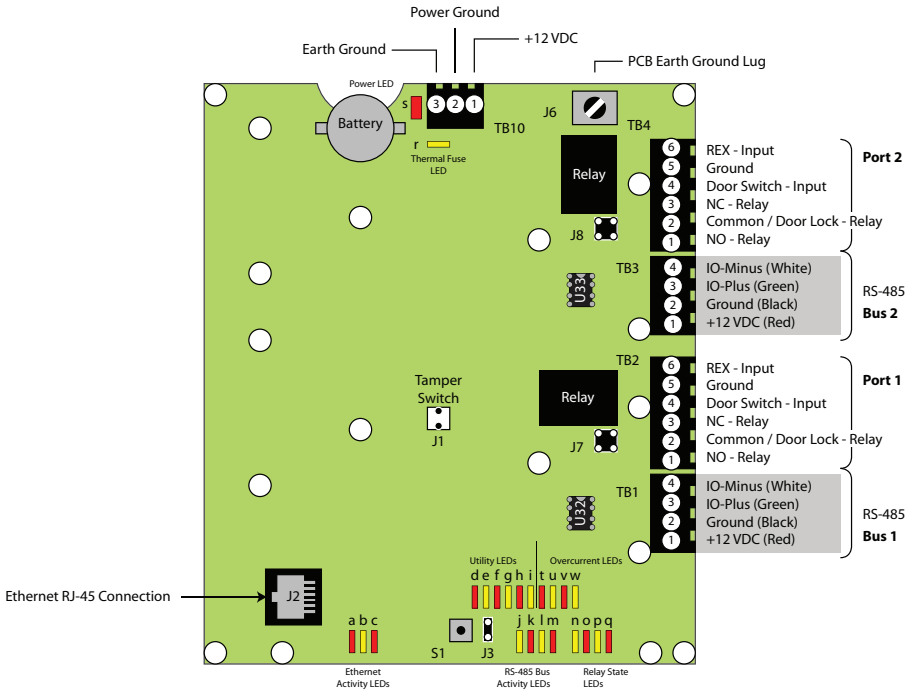

Buffer Capacity:
50,000 Cardholders
10,000 Events

Temperature / Humidity:
-40° F to 140° F
(-40° C to 60° C)
0-90% Non Condensing

Communication:
To Server: TCP/IP 10/100 bus
Between Controllers: TCP/IP 10/100 bus

Lithium Battery:
5 years Memory Retention

ORDERING INFORMATION:

Part Number	Description
NXT-2D	2 Door NXT Controller with Keri firmware
NXT-2D-MSC	2 Door/4 Reader NXT Controller with Mercury firmware

KERI SYSTEMS INCORPORATED

Presented By: