

NORTON RIXSON

ASSA ABLOY

Experience a safer
and more open world

SURFACE CLOSERS

DOOR CLOSER

CATALOG

TABLE OF CONTENTS

Aluminum Door Closers
- 7500 Series 3
- 7570 Series 54
- 8000 Series 80
- 1600 Series 132
- 2800ST Series 168
- 9300 Series 175
- 78-BF Series 186
- 1700 Series 209
- 210 Series 216
- 160 Series 219

Cast Iron Door Closers
- 9500 Series 222
- 9540 Series 241
- 410 Series 248

7500 SERIES
INSTITUTIONAL DOOR CLOSER

INTRODUCTION

The 7500 Series is a robust, multi-sized surface closer designed to deliver superior performance and long-term reliability. Ideal for interior or exterior doors in facilities that demand reliability, such as government, healthcare and educational institutions.



FEATURES

- Tri-Style® packaging; tri-packed for regular, top jamb or parallel arm mounting
- Non-handed
- Rack-and-pinion design
- Cast aluminum body
- Adjustable spring sizes 1-6
- 2-1/8" (54mm) projection
- 1-1/2" (38mm) diameter piston
- 5/8" (16mm) diameter pinion journals
- Standard, separate and independent, latch, sweep and backcheck intensity valves
- Backcheck positioning
- Staked valves
- Retrofit plates
- NorGlide® fluid
- Molded plastic cover
- All standard arm applications allow doors to swing 180°, conditions permitting
- Self-drilling screws
- Full-size template
- Application specific mounting: Regular (S), Top Jamb (JS) or Parallel (P) mount
- Heavy-duty arms: Regular Rigid, Parallel Rigid, CloserPlus®, CloserPlus Spring™ and Unitrol®
- Slide Tracks: push or pull side mounting
- Exceeds 25 million cycles

OPTIONAL FEATURES

- Metal cover: specify M suffix
- Enhanced backcheck. Specify EBC suffix
- Delayed action with pressure relief valve
- Corrosion resistant model (non-hold open only): specify 7500SS
- Lead lined metal cover: specify MLL suffix
- Extra Power: specify 7706EP

NORTON RIXSON

ASSA ABLOY

7500 SERIES
INSTITUTIONAL DOOR CLOSER

OVERVIEW

CUTAWAY VIEW

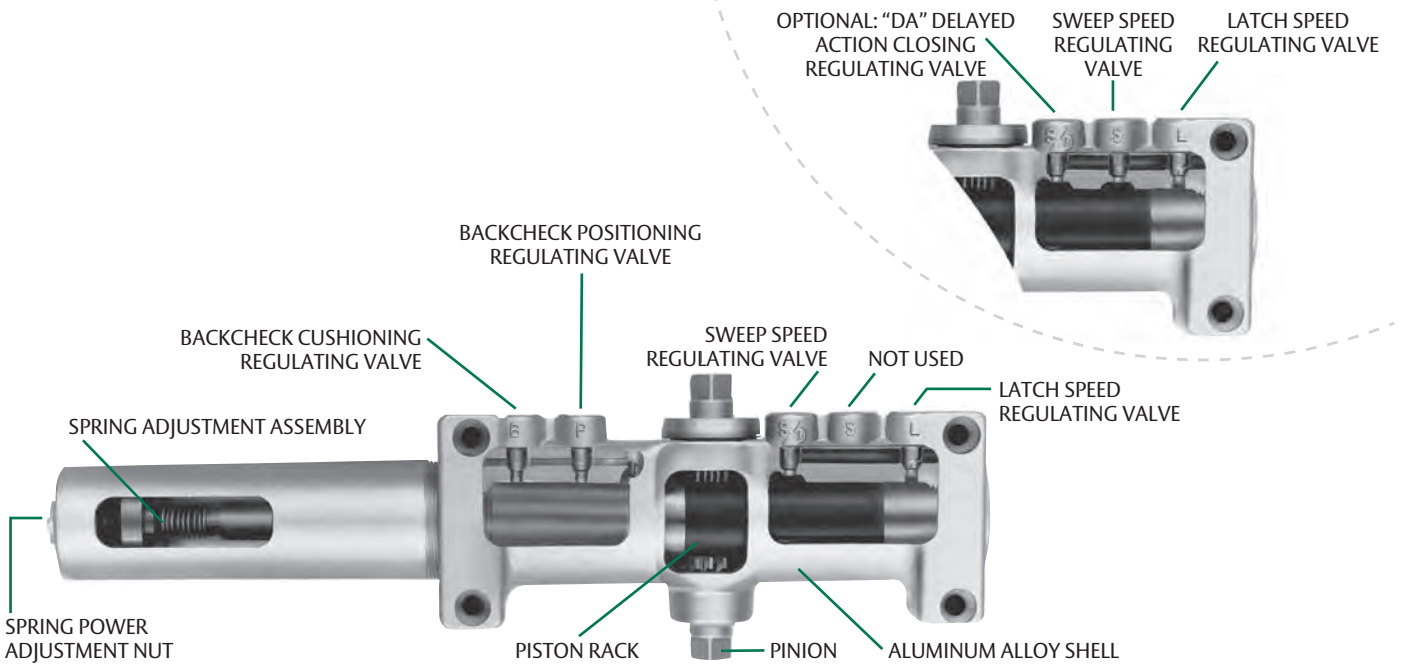

Optional Delayed Action Valving

CERTIFICATIONS

- ANSI/BHMA A156.4, Grade 1 certified
- UL / cUL listed for use on fire rated doors
- UL10C listed for positive pressure fire test
- 7500 door closers are designed to comply with requirements for the Americans with Disabilities Act (A.D.A) and ANSI standard A117.1
- This product is manufactured in an ISO 9001, ISO 14001 facility
- Health product declaration and UL certified environmental product declaration
- GreenCircle certified environmental facts

CAUTION: Door Closers for Low Opening Force Applications:

Door closers installed in openings required to meet the requirements of the Americans With Disabilities Act or ANSI/BHMA Standard A117.1, when adjusted to meet those requirements, may not provide adequate closing power to dependably close and latch the door based on opening or site conditions.

An Environmental Product Declaration (EPD) documents the cradle-to-grave life cycle of a product and how it affects the environment. An important aspect of EPD® is to provide the basis of a fair comparison of products and services by its environmental performance. EPDs can reflect the continuous environmental improvement of products and services over time and are able to communicate and add up relevant environmental information along a product's supply chain.

Windstorm

7500 door closers are UL certified for inswing and outswing single and pair (up to 8'0" x 8'0") door assemblies to ICC 500 for Storm Shelters. Additionally, the 7500 meets FEMA 361 guidelines. 7500 is part of a complete ASSA ABLOY tornado and hurricane shelter solutions utilizing Ceco StormPro 361, Curries StormPro 361, Fleming F5 doors and frames and McKinney SP hinges.

7500 SERIES
INSTITUTIONAL DOOR CLOSER

EXPLANATION OF FEATURES

Aluminum Alloy Housing

Closer bodies are constructed of a special aluminum alloy, carefully selected to accommodate interactive steel components and operating conditions.

Rack & Pinion Operation

Provides a smooth constant control of the door through its full opening and closing cycle. 180° door swing can be achieved when door, frame, hardware and arm function do not interfere.

Non-handed

With few exceptions all series 7500 door closers are non-handed and can be installed on either right or left hand swing doors. Pinion shaft extends vertically through the closer body in both directions. Some options will require that the hand of the closer be specified.

Sweep Speed Control Valve

Allows adjustment of door speed from the door's full open position down to approximately 10° from the closed position.

Latch Speed Control Value

Allows adjustment of door speed from approximately 10° down to the door's fully closed position.

Tri-Style® Packing

7500 comes with screws, brackets and soffit plates to allow for regular, top jamb, and parallel arm installations.

Adjustable Backcheck Cushion Valve

Provides control of the door in the opening cycle, beginning at approximately 75° of door opening. It slows/cushions the door opening, when the door is forcibly opened beyond its pre-adjusted limits.

Adjustable Backcheck Position Valve

Allows the door opening position, where backcheck cushioning begins, to be adjusted to a greater door angle, up to a maximum of 20° farther (approximately 95°).

Standard Molded Cover

Molded of high-impact U.L. listed material and covers the entire closer body assembly. This cover is non-handed for all applications.

Warranty

These closers carry a limited 30-year warranty against defect, and life of the building on the aluminum housing.

Closer Fluid

NorGlide® closer fluid is a specially formulated multi-viscosity hydraulic fluid that contains lubricity and anti-oxidation agents that provide optimum performance and efficiency. This fluid complements the interaction of the door closer's aluminum housing with its steel and brass components, while maintaining stable viscosity to allow the door closer to perform in temperatures ranging from extremely high to as low as -40° F.

DOOR CLOSER POWER OPTIONS

Series 7500 Multi-Sized Door Closer

Adjustable through the entire power range of door closer sizes 1 through 6, as outlined in ANSI/BHMA standard A156.4.

The series 7500 also conforms to the minimum opening force requirements of the Americans with Disabilities Act (A.D.A.) and ANSI/BHMA standard A117.1 for interior doors.

Extra Power

For applications that require additional closing power to overcome stack pressure, high wind, unbalanced HVAC and other issues that can prevent the doors from closing, model 7706EP is available.

Model 7706EP offers as much as 22 lbs. of closing force (not adjustable, arm mounting (RA, TJ or PA) and degree of swing determine the exact lbs.) Non-ADA doors only.

Corrosion-Resistant Door Closer

The series 7500SS door closers with molded plastic cover are available for use where corrosive conditions exist. This series is provided with brass adjustment valves, a 440 grade stainless steel pinion shaft, an all-aluminum body and bronze closer arm bushings; all other components are of 302/303 grade stainless steel. Fasteners are 8-18 stainless steel. This product is available for standard regular arm, top jamb and parallel arm, non-hold open, applications only.

Optional Metal Cover

This steel cover is non-handed for regular and parallel arm applications, but is handed for top jamb applications.



Cover is available in sprayed or architectural plated finishes.

Security Cover

Supplied standard with all series 7570 door closers. This deep drawn steel cover is handed for all applications. The cover is fastened to the closer body at two points on top and to the door closer body stand-offs at two points on the bottom.

Optional ABS Cover

Consult factory for details.

NORTON RIXSON

ASSA ABLOY

7500 SERIES
INSTITUTIONAL DOOR CLOSER

EXPLANATION OF FEATURES

Enhanced Backcheck
This feature provides adjustable backcheck intensity beginning at approximately 15° of the door opening cycle. It is intended for use in situations where the standard backcheck beginning at approximately 75° of door opening allows too much unrestricted door travel to obtain control of the door without the fear of peripheral damage to the door closer, door, frame, hinges or pivots; or adjacent walls or structures. This feature is most frequently used in schools and detention facilities. Specify suffix EBC.

Adjustable Delayed Action Closing
An optional hydraulic feature that adds a third speed range to the closing cycle. This feature becomes effective when the door is opened and released at any point beyond 70°. The amount of time delay depends upon the combination of the angle of door release and valve adjustment. The valve can be adjusted with a 1/8" (3mm) hex key from no delay time up to maximum delay times of:

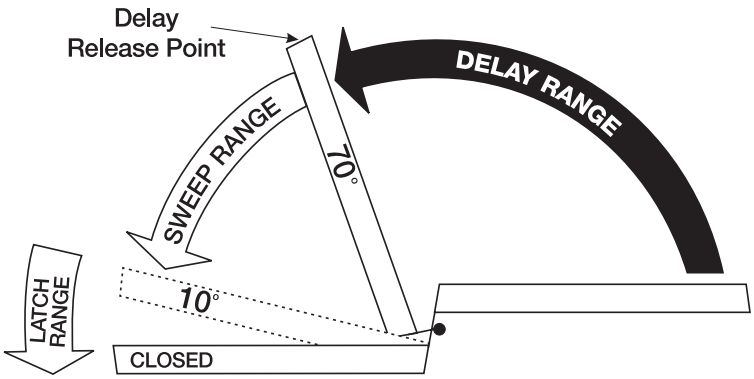

Door Opened and Released at	Approximate Time of Delay Cycle
180°	4-5 minutes
120°	2-3 minutes
90°	25-30 seconds

Pressure Relief Safety Valve
The delayed action hydraulic system contains a pressure relief valve. Any time the door is forced toward the closed direction while it is in the closing cycle, the valve will open and permit the door to close. This prevents damage to door, frame and closer.

Suggested Applications
Delayed Action closing allows slow-moving traffic to clear the opening before the door closer's normal closing cycle begins. This feature can be helpful in health care facilities such as hospitals and nursing homes. It provides sufficient time for persons on crutches or in wheelchairs to pass through a door without concern of it closing. At the same time, it can accommodate the facility's staff with movement of food service carts, beds, and other wheeled traffic.

Use of delayed action closers on many doors throughout industrial and commercial buildings can also assist the flow of traffic. Locations where additional time to clear the opening is advantageous are doors between office and factory/warehouse facilities, doors to workshops or laboratories, to kitchen and food processing areas, etc.

OPTIONAL FEATURES – ARMS

Non-Hold Open
Self-closes door every time door is opened. Auxiliary stop (by others) required except when using the CloserPlus®, CloserPlus Spring™ or Unitrol® arms.

Hold Open
Achieved by means of ball and detent/roller. Ball and detent or roller hold open is effective in a range of 85° to 110°.

Hold open arm door closers are not permitted to be used on fire door assemblies.

Door Opening Degrees

Arm Function	Regular Top Jamb Parallel Arm	Parallel Rigid Arm	CloserPlus® Parallel Arm	CloserPlus Spring™ Parallel Arm	Unitrol® Parallel Arm	Unitrol® Top Jamb	Low Profile Regular, Parallel	Slide Track
Non-Hold Open	✓	✓	85° to 110°	85° to 110°	85° to 110°	85° to 110°	✓	85° to 110°/180°
Hold Open	90° to 180°	85° to 180°	85° to 110°	85° to 110°	85° to 180°	85° to 180°	✓	85° to 110°

✓=180° trim and template permitting

7500 SERIES
INSTITUTIONAL DOOR CLOSER

SUGGESTED SPECIFICATIONS

7500 Series

Closers for interior and exterior doors shall be full rack-and-pinion type with cast aluminum alloy body. Closers shall be surface mounted and shall project no more that 2-3/16" (55mm) from the surface of the door. Closers shall be non-handed to permit installation on doors of either hand. Closer fluid shall contain lubricity and anti-oxidation agents. Closer fluid shall maintain stable viscosity to allow door closer to perform in temperatures ranging from extremely high to as low as -40°F. Closers shall have multi-size spring power adjustment to permit setting of spring from size 1 through size 6. Closers shall have two non-critical valves, hex key adjusted, to independently regulate sweep speed and latch speed.

Closers shall have backcheck cushioning controlled by a hex key adjusted valve. Closers shall have backcheck position controlled by a hex key adjusted valve.

[Closers shall have adjustable delayed-action closing controlled by a hex key adjustable valve.]

[Closers shall be highly corrosion resistant and shall have all external body components of aluminum, brass or stainless steel material and all fasteners of stainless steel.]

Regular arm and top jamb closers shall have a non-hold open shoe permitting 15% (+/ – 7-1/2%) power adjustment. **Closers shall be enclosed in a [molded resin cover] [plated or sprayed metal cover]. Closers to be Norton Rixson [7500] [7500M] [7500SS].

**For special arms insert the appropriate specification from column two on this page.

**Unitrol® Arm

Door closers shall have a fixed door stop feature effective at one point selected at installation, from 85° - 110° in five-degree increments. Door stop shall be cushioned by a shock-absorbing heavy-duty spring action effective at the [soffit plate] [arm shoe] pivot. [Closers shall be provided for parallel arm installation using rigid steel main arm and secondary arm lengths proportional to the door width.] [Closers shall be provided for top jamb installation using steel, rigid main arm and telescoping secondary arm adequate for the frame reveal of the openings.]

**CloserPlus® Arm

Door closers shall have a field reversible door stop. Hold open tension shall be adjustable effective at one point selected at installation, from 85° - 110° in five degree increments. Closers shall be provided for parallel arm installation using a forged rigid steel main arm and secondary arm.

**CloserPlus Spring™ Arm

Door closers shall have built-in door stop [and holder] effective at one point selected at installation, from 85° - 110° in five-degree increments. Door stop mechanism shall be reversible and have a buffer spring that engages prior to the dead stop feature, reducing shock loads to the door and frame assembly. Door stop mechanism shall be attached to soffit plate. [Hold open mechanism shall have engage/disengage selection actuated by thumbturn]. Closers shall be provided for parallel installation using a forged rigid steel main arm and secondary arm.

APPLICATIONS



Non-hold open arm shown

Regular Arm

This is the only pull-side application where a double lever arm is used. It is the most power efficient application for a door closer. Sufficient frame, door and/or ceiling clearance must be considered.

Since the arm assembly projects directly out from the frame, this application may present an aesthetics issue or be prone to vandalism.



Parallel Arm

This application provides the most appealing design appearance for a surface-mounted door closer having a double lever arm. This also makes it beneficial in vandalism-prone areas. It is on the push side of the door and the arm assembly extends almost parallel to the door. In the closed position, there is very little or no hardware projecting beyond the frame face in most situations.

Due to the geometry of the arm it is approximately 25% less power-efficient than a regular arm application. The entire closer and arm assembly are mounted below the frame stop, requiring a top rail clearance on the door of between 6-5/8" (168mm), when using a low profile arm, to 7-1/4" (184mm), when using the hold open arm.



Non-hold open arm shown

Top Jamb

For efficiency reasons this application provides the best alternative to the regular arm application. There must be sufficient frame face and/or ceiling clearance for this application. It requires a top rail on the door of just 2-1/8" (54mm). This application provides the best door control for doors in exterior walls that swing out of a building.

The entire door closer and arm assembly project from the frame, similar to the regular arm application, where matters of appearance and malicious abuse can be of concern. Consideration must be given to depth of frame reveal.

7500 SERIES
INSTITUTIONAL DOOR CLOSER

APPLICATIONS



Non-hold open arm shown

Parallel Rigid Arm

An enhanced variation of the standard parallel arm assembly that is intended for use in heavy traffic areas where auxiliary door stops are installed.

Hold open available - specify hand when ordering.



Non-hold open arm shown

CloserPlus® Arm

Similar to the Parallel Rigid arm, this arm incorporates a stop at the arm's soffit plate to dead stop the door at a predetermined degree of door swing between 85° and 110°, in 5° increments. Prior to dead stop the door closer's backcheck feature slows the door speed to reduce the impact of the stop action.

The CloserPlus arm is intended for use where an auxiliary door stop cannot be utilized and no more than moderate abuse is anticipated. Where more extreme conditions are expected, use of a Unitrol® arm is recommended.

Hold open strength is adjustable.



Non-hold open arm shown

CloserPlus Spring™

This arm has all of the characteristics of the CloserPlus arm with an additional steel buffer spring that provides greater protection at the end of the door opening cycle.

For extreme conditions, use of a Unitrol arm is recommended. Available with or without hold open.



CloserPlus Ramp™

The CLP-R uses a patent pending ramp and plunger design that easily slides into place reducing wear often seen on traditional hold open arms. Ideal for applications where the door will constantly be pulled out of hold open.

APPLICATIONS



Regular Rigid Heavy-Duty Arm

This double lever arm features a non-adjustable secondary arm. Orbitally riveted joints prevent tampering or disassembly. Prefix "R" to model number. **Available non-hold open only.**



Non-hold open arm shown

Parallel Rigid Offset Arm

This heavy-duty parallel rigid arm provides additional vertical clearance. It is well suited for applications where weather-stripping or other hardware prevents the use of the standard Parallel Rigid (PR) soffit plate. The non-hold open and hold arms allow 1-1/4" clearance. When used in conjunction with a 6891 spacer block, the PRO arm provides 1-7/8" clearance to accommodate the use of a surface overhead stop/holder.



Unitrol® Parallel Arm



Unitrol® Top Jamb

Unitrol® Arm

Can be used for either parallel arm or top jamb applications. Unitrol arms combine the features of a double lever arm overhead door stop/holder with the backcheck feature of the door closer to reduce door stopping shock loads to a minimum. The Unitrol uses a compression spring buffer at the soffit plate/arm shoe that will absorb 30 lbs. of force, 5° prior to the door's dead stop. Coupled with the door closer's backcheck feature, this arm provides the most controlled stop available with a surface door closer.

For parallel arm applications there are three different length arm assemblies. Each length is designed for a specific range of door widths to provide precise door control. This further lessens the dead stop impact on the door's hinges/pivot**s.**

Only available in painted finishes.

7500 SERIES
INSTITUTIONAL DOOR CLOSER

APPLICATIONS



Pull Side



Low Profile Pull Side



Push Side



Low Profile Push Side

Slide Track

Whether pull or push side mounted, slide track applications provide the designer with the smoothest lines available in a surface mounted door closer. The single lever arm allows components to be located in a stack configuration to minimize projection and eliminate obtrusive arm angles. The arm geometry reduces door closer power efficiency by approximately 25% from that of a regular arm.

A variation of the standard slide track application is available for pocket doors, where it is desirable to have the door closer completely concealed when the door is in the 90° open position. See page 26 for details.

Standard Unit:

• Adjustable 85° to 110° (hold open and non-hold open). Track is supplied with a spring buffered stop. An auxiliary stop, by others, is recommended.

- Specify if hold open unit is required.
- 180° swing (non-hold open, pull side only) is also available. This track assembly requires that a door stop, by others, be supplied to stop the door.

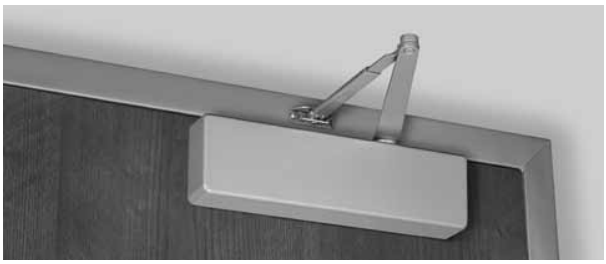

Regular Arm - Regular Arm allows closer to be installed where there is as little as 1" (25mm) of frame face or ceiling clearance.



Parallel Arm - Parallel Arm allows closer to be installed 1/2" (13mm) higher up on door than standard parallel arm application.

Low Profile Arm

Supplied with 7580 series door closers for non-hold open installations only. Low profile arms have a reduced height elbow joint and a straight main arm. This enables the door closer to be installed in less vertical space.

NORTON RIXSON

ASSA ABLOY

7500 SERIES
INSTITUTIONAL DOOR CLOSER

REGULAR ARM

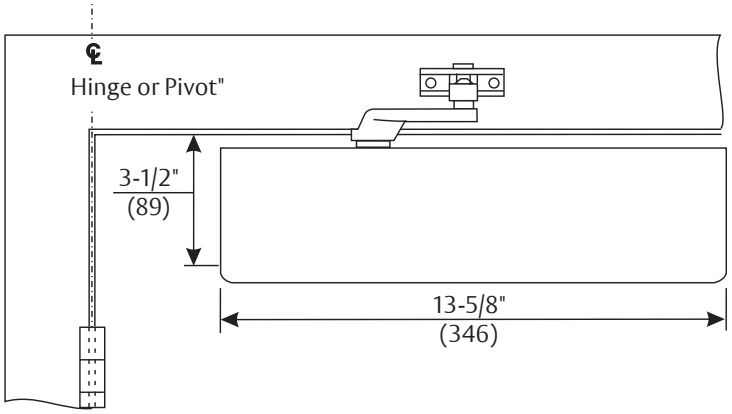

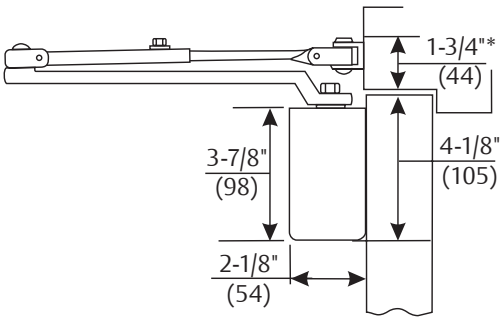

Mounting holes for closer body are spaced 2-3/8" (60mm) vertically x 6-3/4" (171mm) horizontally.
* This dimension will vary. Standard non-hold open arm illustrated.

Model Number	
Non-Hold Open	Hold Open
7500	7500H

Notes:

- Door closers are set at midpower range from the factory
- Measurements are inches/mm unless noted
- Standard door widths: interior 32"-54" (81-137cm)
  exterior 30"-48" (76-122cm)

7500 SERIES
INSTITUTIONAL DOOR CLOSER

TOP JAMB ARM

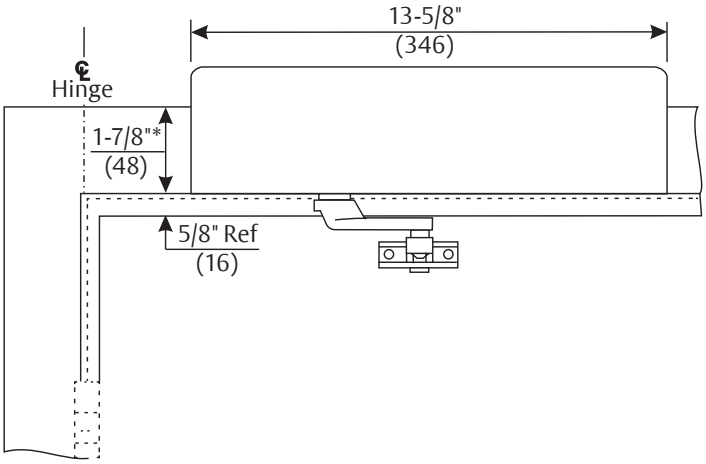

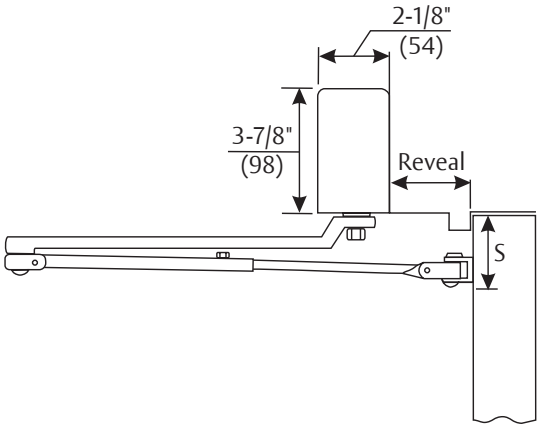

Mounting holes for closer body are spaced 2-3/8" (86mm) vertically x 6-3/4" (171mm) horizontally.
* Minimum frame face with 7786 drop plate. 3-1/4" (83mm) required when drop plate is not used.

Maximum Door Width Inches (cm)	Reveal Range Inches	Maximum Door Opening
Multi-Sized	**Non-Hold Open Arm**	
(JS)7500/7500M	0" to 3" (0 to 76mm)	180˚
J7500	2-3/4" to 7" (70 to 178mm)	150˚
JL7500	2-3/4" to 7" (70 to 178mm)	180˚
J7580 x 7787	0" to 2-3/4" (0 to 70mm)	180˚
Multi-Sized	**Hold Open Arm**	
J7500/J7530MH	0" to 3" (0 to 76mm)	180˚
J7500H	2-3/4" to 6-3/4" (70 to 171mm)	150˚
JL7500H	2-3/4" to 6-3/4" (70 to 171mm)	180˚

Model Number	
Non-Hold Open	**Hold Open**
7500 J7500 JL7500	7500H J7500H JL7500H

Notes:

- Door closers are set at midpower range from the factory
- Measurements are inches/mm unless noted
- Standard door widths: interior 32"-54" (81-137cm)
  exterior 30"-48" (76-122cm)

S Minimum Top Rail of Door					
Without Drop Plate or with 7786 Back Plate (mm)			**With 7787 Drop Plate (mm)**		
J7500/ J7530M J7500	J7500H/ J7530MH J7500H	J7580	J7500/ J7530M J7500	J7500H/ J7530MH J7500H	J7580
2" (51mm)	2-1/2" (64mm)	N/A	4-1/8" (105mm)	4-5/8" (117mm)	3-5/8" (92mm)

NORTON RIXSON

ASSA ABLOY

7500 SERIES
INSTITUTIONAL DOOR CLOSER

PARALLEL ARM

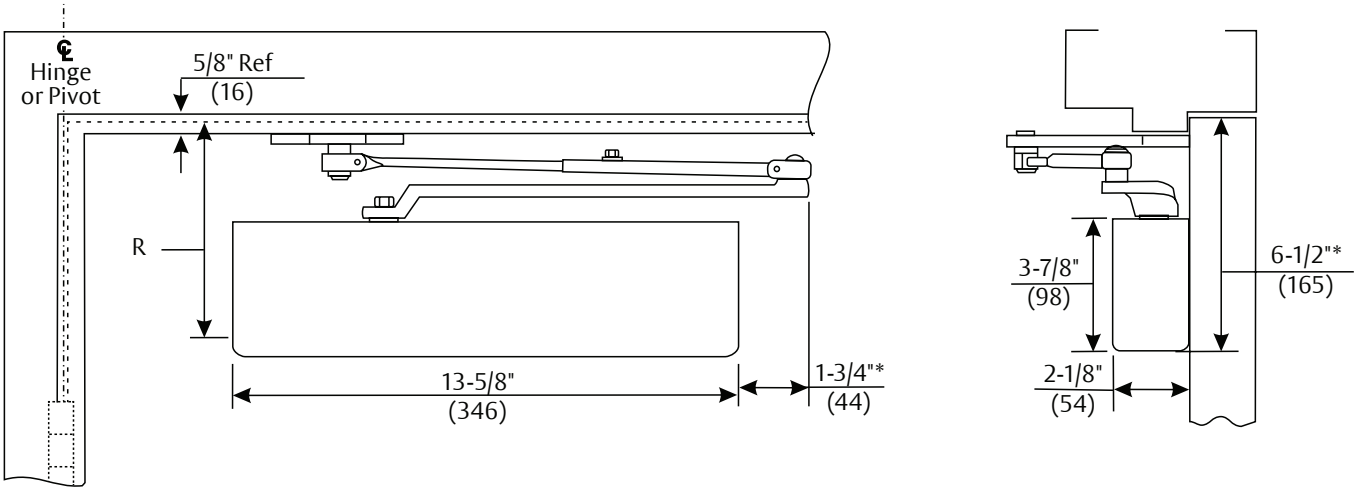

Mounting holes for closer body are spaced 2-3/8" (86mm) vertically x 6-3/4" (171mm) horizontally.
* This dimension will vary. Standard non-hold open arm illustrated.

Model Number	
Non-Hold Open	Hold Open
7500	7500H

R (inches/mm) Minimum Top Rail of Door with 5/8" (16mm) Frame Stop				
Without Drop Plate			With 7788 Drop Plate	
P7500	P7500H	P7580	P7500H	P7580
5-7/8" (149)	6-1/4" (159)	5-3/8" (137)	2-3/4" (70)	1-7/8" (48)

Notes:

- Door closers are set at midpower range from the factory
- Measurements are inches/mm unless noted
- Standard door widths: interior 30"-54" (76-137cm)
  exterior 30"-48" (76-122cm)

7500 SERIES
INSTITUTIONAL DOOR CLOSER

PARALLEL RIGID ARM

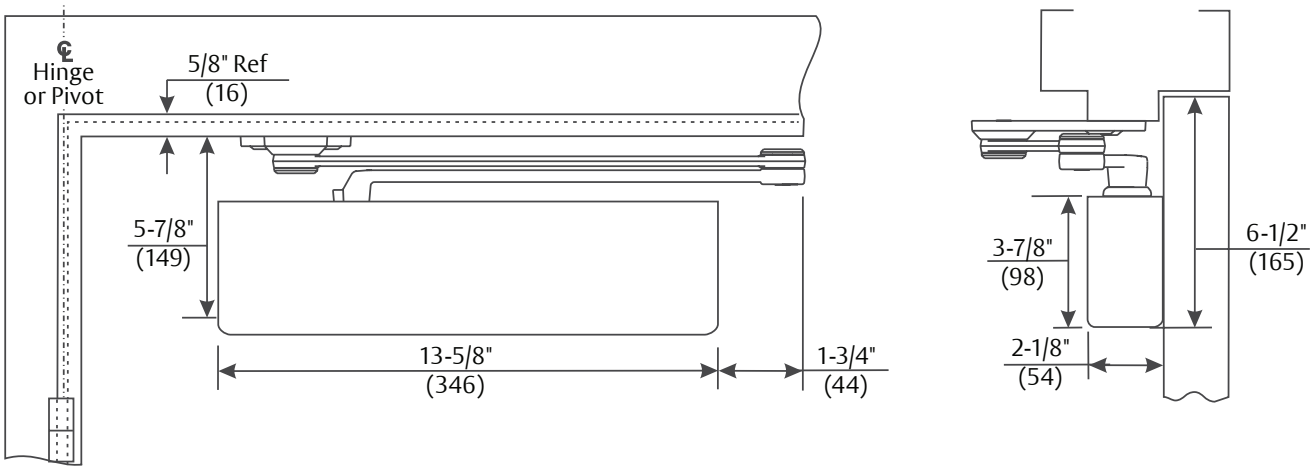

Mounting holes for closer body are spaced 2-3/8" (60mm) vertically x 6-3/4" (171mm) horizontally.

Model Number	
Non-Hold Open	**Hold Open***
PR7500	PR7500H

*Specify hand when ordering.

Notes:

- Door closers are set at midpower range from the factory
- Measurements are inches/mm unless noted
- Standard door widths: interior 30"-48" (76-122cm)
  exterior 32"-48" (81-122cm)

CLOSERPLUS® ARM

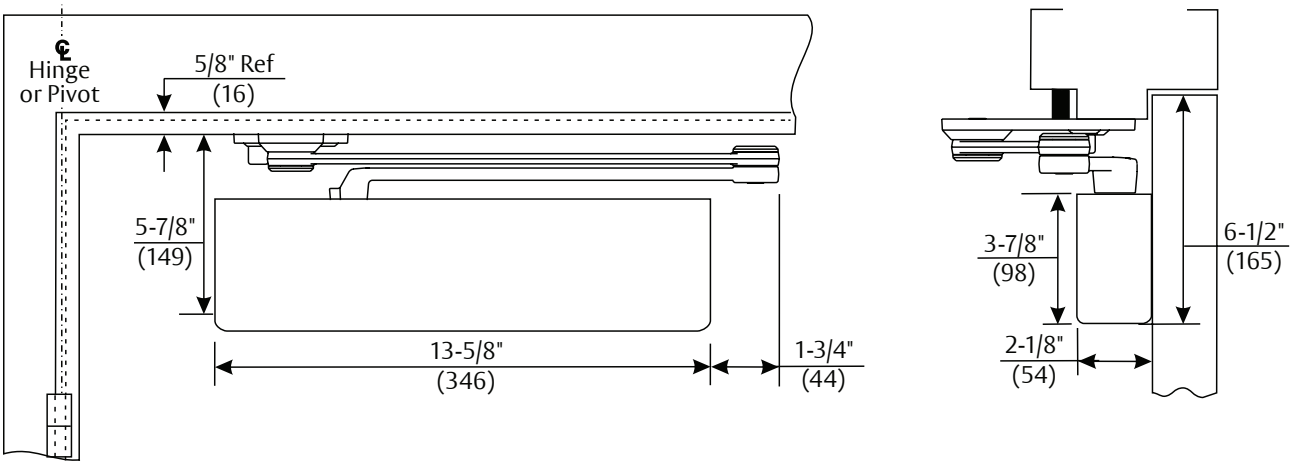

Mounting holes for closer body are spaced 2-3/8" (60mm) vertically x 6-3/4" (171mm) horizontally.

Model Number		
Non-Hold Open	**Thumbturn Hold Open**	**Ramp Hold Open**
CLP7500	CLP7500T	CLP7500R

Notes:

- Door closers are set at midpower range from the factory
- Measurements are inches/mm unless noted
- Standard door widths: interior 30"-48" (76-122cm)
  exterior 32"-48" (81-122cm)

7500 SERIES
INSTITUTIONAL DOOR CLOSER

CLOSERPLUS SPRING™ ARM

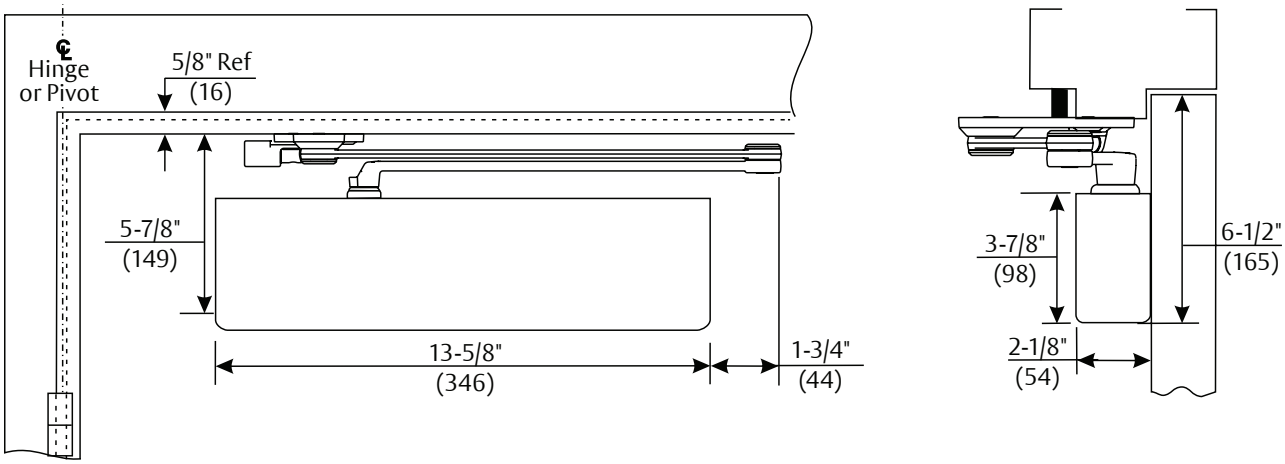

Mounting holes for closer body are spaced 2-3/8" (60mm) vertically x 6-3/4" (171mm) horizontally.

Model Number	
Non-Hold Open	**Thumbturn Hold Open**
CPS7500	CPS7500T

Notes:

- Door closers are set at midpower range from the factory
- Measurements are inches/mm unless noted
- Standard door widths: interior 30"-48" (76-122cm)
  exterior 32"-48" (81-122cm)

REGULAR RIGID HEAVY-DUTY ARM

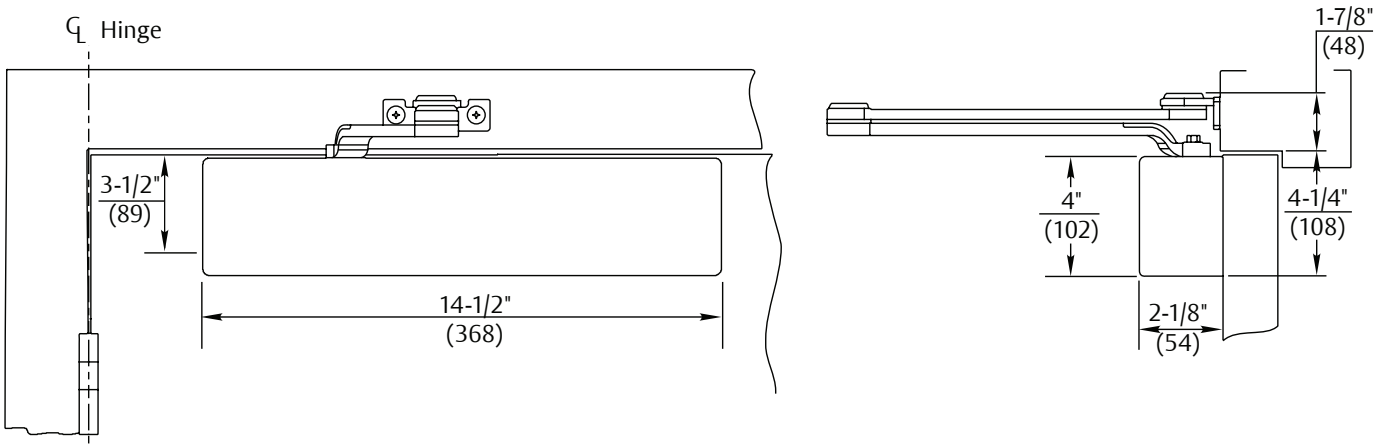

Mounting holes for closer body are spaced 2-3/8" (60mm) vertically x 6-3/4" (171mm) horizontally.

Model Number
Non-Hold Open Only
R7500

Notes:

- Door closers are set at midpower range from the factory
- Measurements are inches/mm unless noted
- Standard door widths: interior 30"-54" (76-137cm)
  exterior 30"-52" (76-132cm)

7500 SERIES
INSTITUTIONAL DOOR CLOSER

PARALLEL RIGID OFFSET ARM

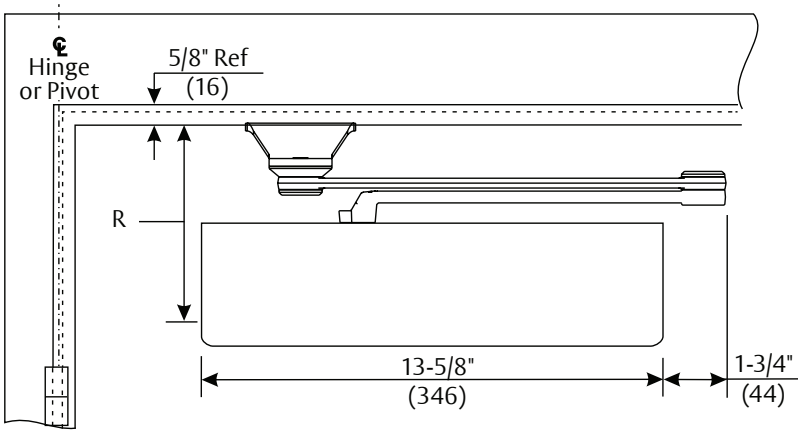

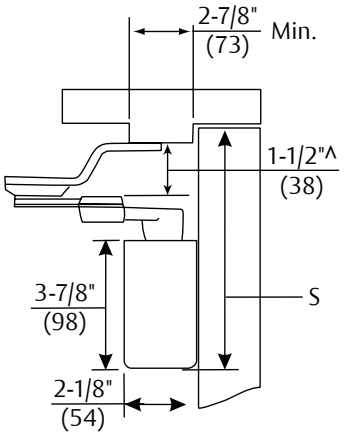

Mounting holes for closer body are spaced 2-3/8" (60mm) vertically x 6-3/4" (171mm) horizontally.
^ If clearance greater than 1-1/2" is needed, 6891 spacer block is required.

R (inches/mm) Minimum Top Rail of Door with 5/8" (16mm) Frame Stop		S Minimum Top Rail of Door	
Without 6891 Spacer	**With 6891 Spacer**	**Without 6891 Spacer**	**With 6891 Spacer**
7-1/8" (181)	7-5/8" (194)	7-5/8" (194)	8-1/8" (206)

Model Number	
Non-Hold Open	**Hold Open***
PRO7500	PRO7500H

*Specify hand when ordering.

Notes:

- Door closers are set at midpower range from the factory
- Measurements are inches/mm unless noted
- Standard door widths: interior 30"-48" (76-122cm)
  exterior 32"-48" (81-122cm)

NORTON RIXSON

ASSA ABLOY

7500 SERIES
INSTITUTIONAL DOOR CLOSER

PARALLEL UNITROL® ARM

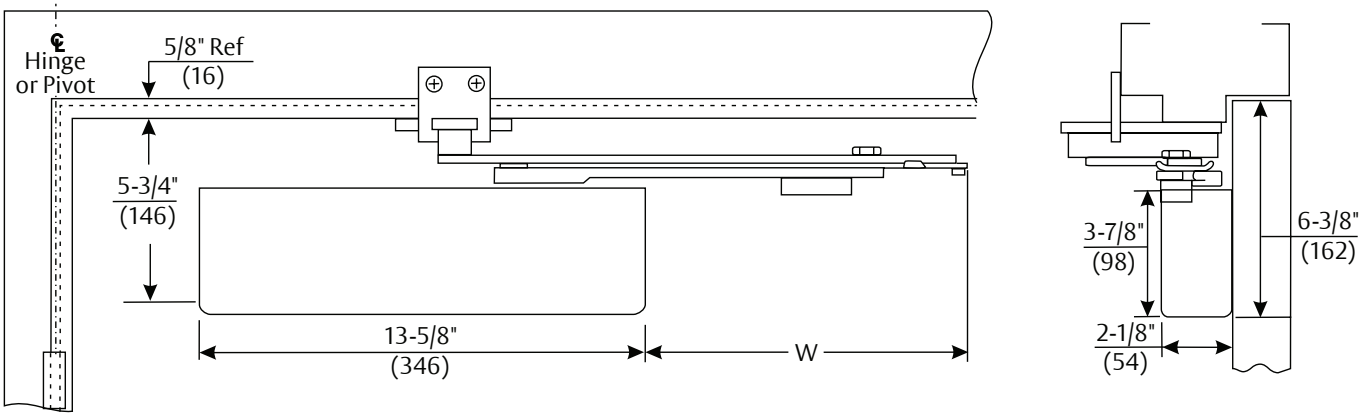

Mounting holes for closer body are spaced 2-3/8" (86mm) vertically x 6-3/4" (171mm) horizontally.
Door width must be specified when ordering.

Use 6190 bracket for reveals 1-7/8" - 4-5/8" (48 to 117mm). Reveals in excess of 4-5/8" (117mm) require use of a 6191 reinforcing kit. Reveals to 1/8" (3mm) require use of a 2019L angle bracket.

Door Width inches/cm	W Arm Extension Beyond Closer
28-32" (71-81)	8-5/8" (219)
33-41" (84-104)	10-1/8" (257)
42-48" (107-122)	11-1/2" (292)

Model Number		
Non-Hold Open	Hold Open	x Specify Door Width
UNI7500	UNI7500H	

Notes:

- Door closers are set at midpower range from the factory
- Measurements are inches/mm unless noted
- Standard door widths: interior 30"-48" (76-122cm)

7500 SERIES
INSTITUTIONAL DOOR CLOSER

TOP JAMB UNITROL® ARM

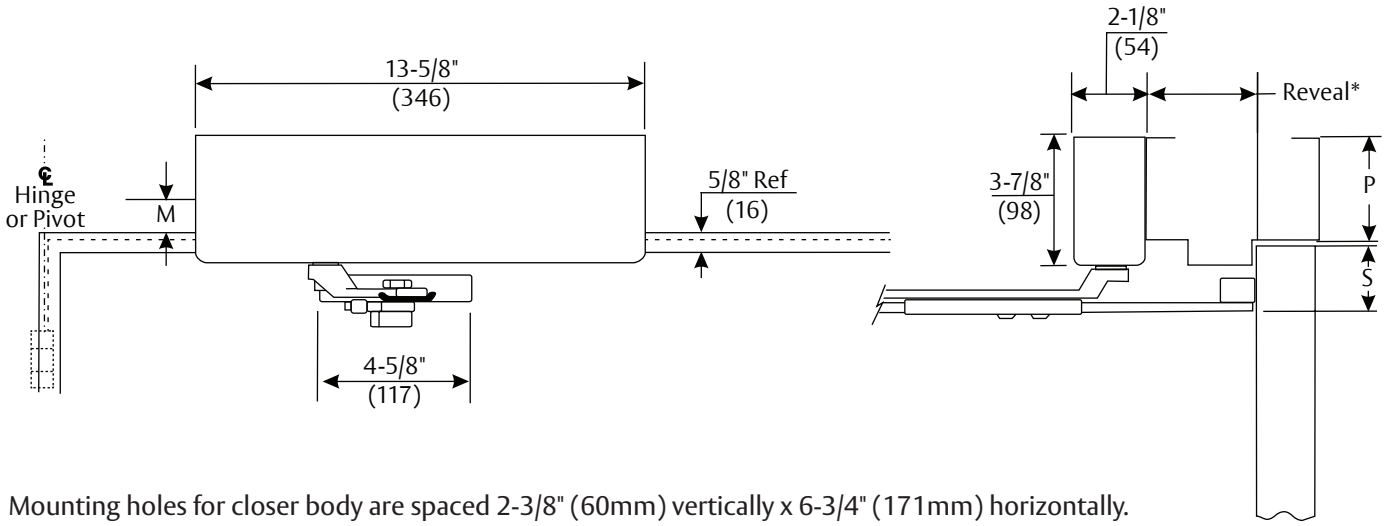

Mounting holes for closer body are spaced 2-3/8" (60mm) vertically x 6-3/4" (171mm) horizontally.
* Reveals up to a maximum of 7-3/8" (187mm).
Reveal must be specified when ordering.

Backplates	M Minimum Frame Face	P Minimum Ceiling Clearance	S Minimum Top Rail Clearance
7786^	1-5/8" (41)	3-1/8" (79)	2-1/4" (57)
7787	1-7/8" (48)		3-1/2" (89)

^ supplied standard with closer

Model Number		x Specify Frame Reveal
Non-Hold Open	Hold Open	
UNIJ7500	UNIJ7500H	

Notes:

- Door closers are set at midpower range from the factory
- Measurements are inches/mm unless noted
- Standard door widths: interior 34"-54" (86-137cm)

NORTON RIXSON

ASSA ABLOY

7500 SERIES
INSTITUTIONAL DOOR CLOSER

PULL SIDE SLIDE TRACK

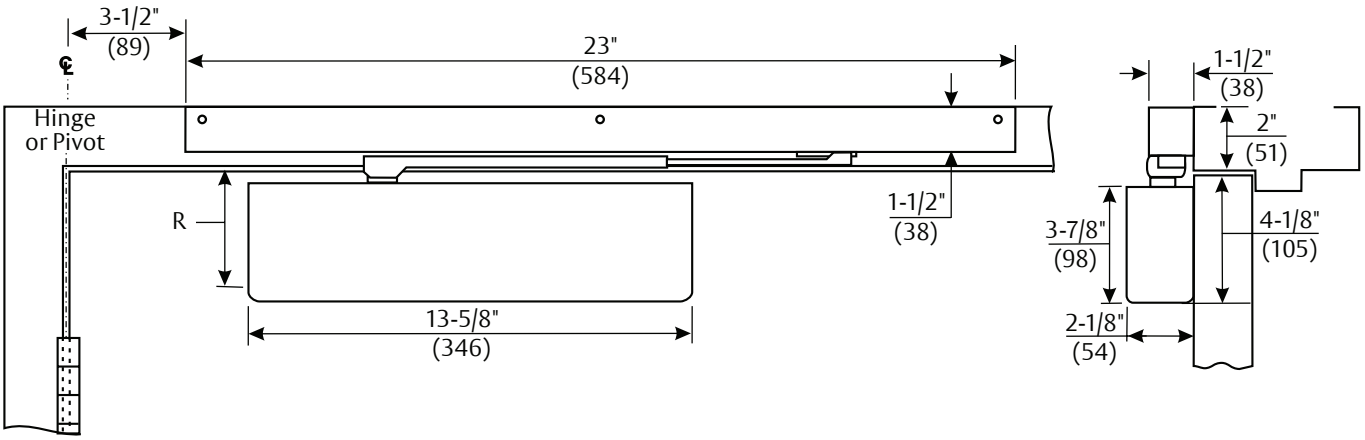

Mounting holes for closer body are spaced 2-3/8" (60mm) vertically x 6-3/4" (171mm) horizontally.

R (inches/mm) Minimum Top Rail of Door with Frame Stop	
Without Drop Plate	**With 7786 Drop Plate**
3-1/2" (89)	2-5/8" (67)

Model Number [1, 2]		
Non-Hold Open		**Hold Open**
85°-100°	**85°-180°**	**85°-180°**
7500ST	7500ST-180	7500STH

1- Units can also be mounted with the closer body on the jamb. Prefix the model number with a "J". Where the frame face is less than 3-3/8" (86mm) a number 7786JP backplate will be required.

2- Units can also be installed on double egress doors using a handed arm that will accommodate the frame profile. Suffix the model number with "DE". For reveal ranges 1/4" to 3" (6 to 76mm).

Notes:

- Door closers are set at midpower range from the factory
- Measurements are inches/mm unless noted
- Standard door widths: interior 32"-48" (81-122cm)
  exterior 32"-38" (81-97cm)

7500 SERIES
INSTITUTIONAL DOOR CLOSER

PUSH SIDE SLIDE TRACK

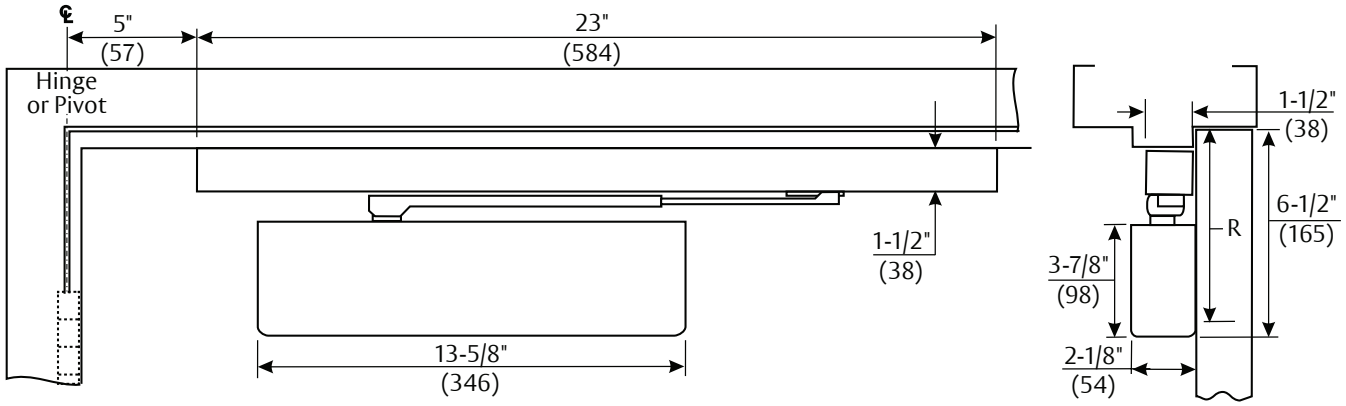

Mounting holes for closer body are spaced 2-3/8" (60mm) vertically x 6-3/4" (171mm) horizontally.

R (inches/mm) Minimum Top Rail of Door with Frame Stop	
Without Drop Plate	**With 7786 Drop Plate**
6" (152)	2-5/8" (67)

Model Number	
Non-Hold Open 85°-180°	**Hold Open 85°-180°**
7500ST-180	7500STH

Notes:

- Door closers are set at midpower range from the factory
- Measurements are inches/mm unless noted
- Standard door widths: interior 32"-48" (81-122cm)
  exterior 32"-38" (81-97cm)

LOW PROFILE PULL SIDE SLIDE TRACK

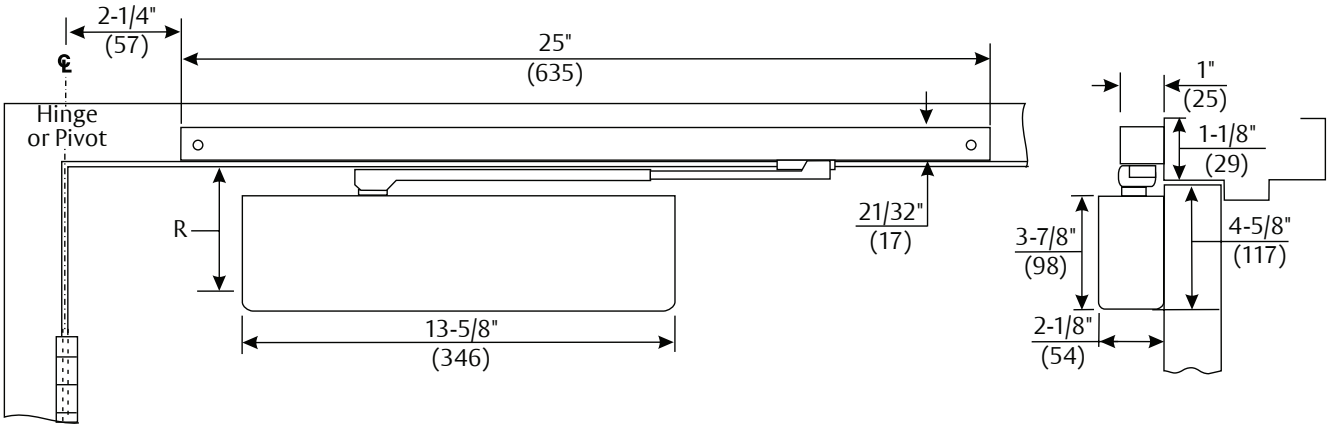

Mounting holes for closer body are spaced 2-3/8" (60mm) vertically x 6-3/4" (171mm) horizontally.

R (inches/mm) Minimum Top Rail of Door with Frame Stop	
Without Drop Plate	**With 7786 Drop Plate**
3-1/2" (89)	2" (51)

Model Number	
Non-Hold Open	**Hold Open**
7540ST	7540STH

Notes:

- Door closers are set at midpower range from the factory
- Measurements are inches/mm unless noted
- Standard door widths: interior 32"-48" (81-122cm)

7500 SERIES
INSTITUTIONAL DOOR CLOSER

LOW PROFILE PUSH SIDE SLIDE TRACK

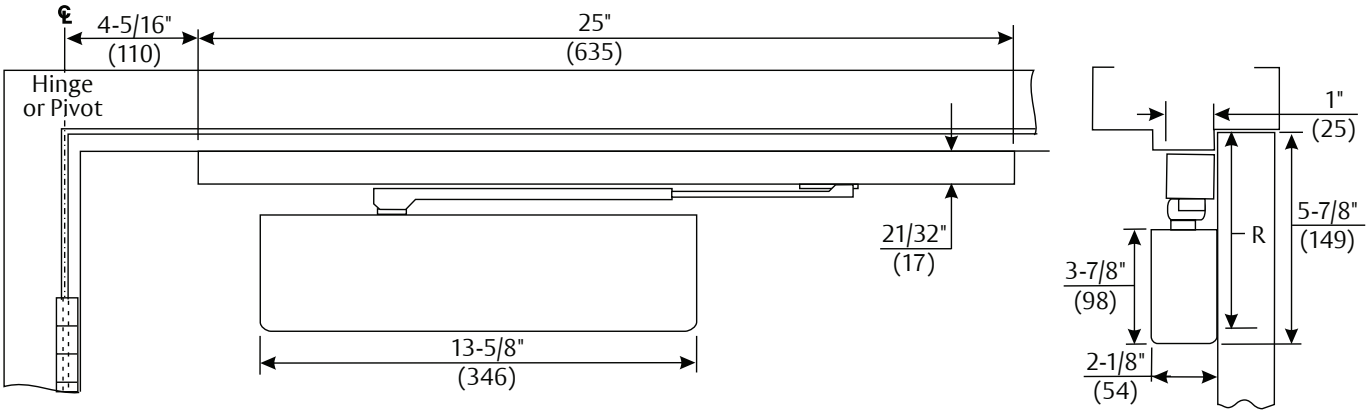

Mounting holes for closer body are spaced 2-3/8" (60mm) vertically x 6-3/4" (171mm) horizontally.

R (inches/mm) Minimum Top Rail of Door with Frame Stop	
Without Drop Plate	**With 7786 Drop Plate**
5-1/4" (133)	3-5/8" (92)

Model Number	
Non-Hold Open	**Hold Open**
PS7540ST	PS7540STH

Notes:

- Door closers are set at midpower range from the factory
- Measurements are inches/mm unless noted
- Standard door widths: interior 32"-48" (81-122cm)

POCKET DOOR 7706EPSTP

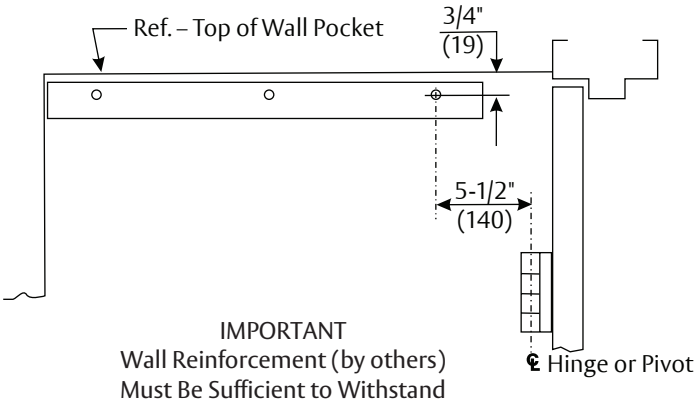

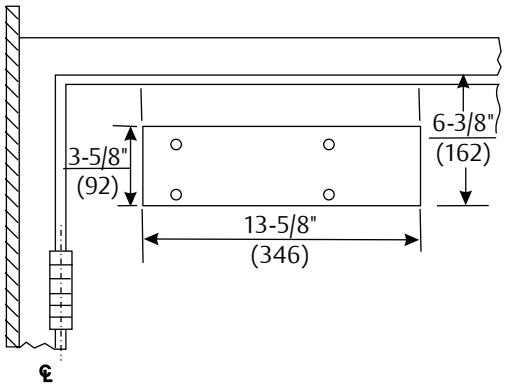

IMPORTANT
Wall Reinforcement (by others)
Must Be Sufficient to Withstand
Door Action

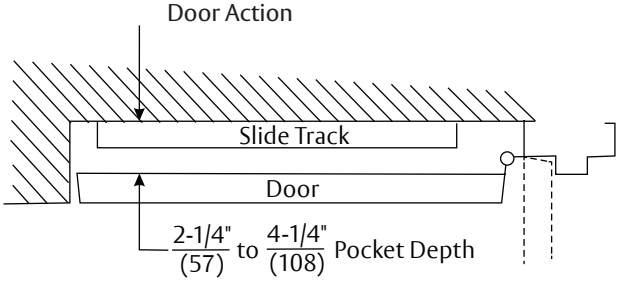

7706EPSTP Closers
Slide Track for 90° Wall Pocket Installation
For Pocket Depths 2-1/4" to 4-1/4" (57mm to 108mm)

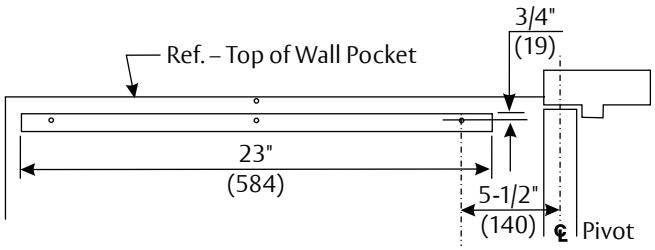

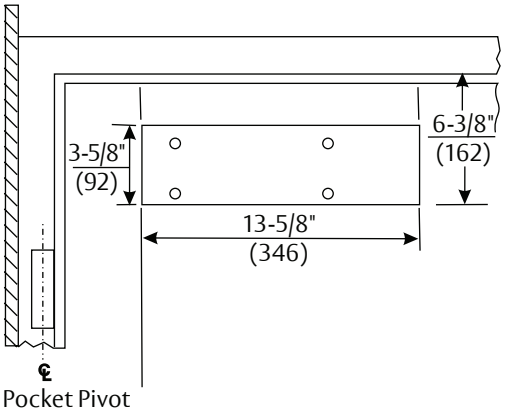

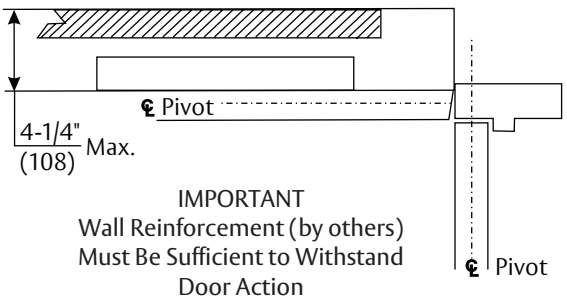

IMPORTANT
Wall Reinforcement (by others)
Must Be Sufficient to Withstand
Door Action

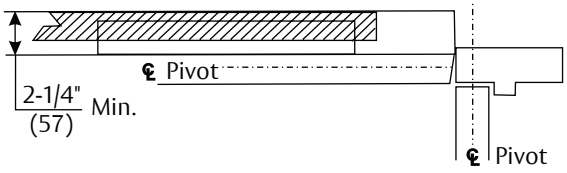

7500 SERIES
INSTITUTIONAL DOOR CLOSER

RETROFIT PLATE

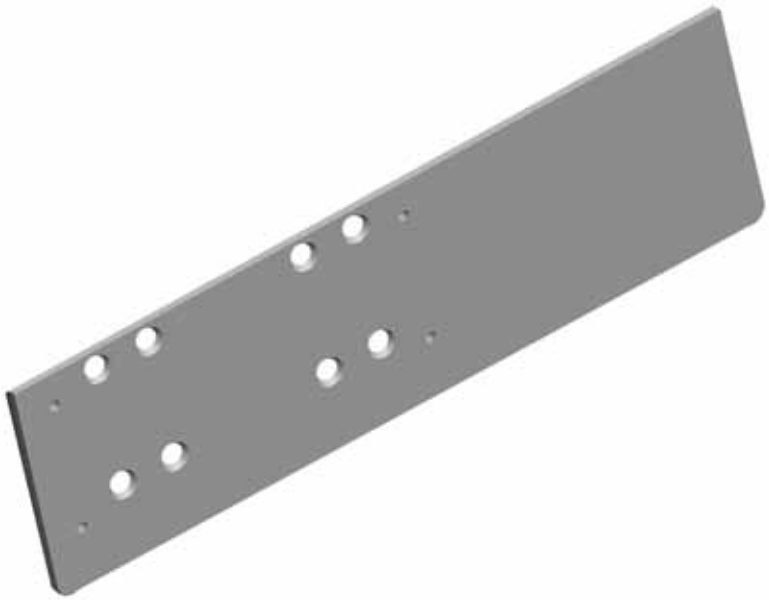

The retrofit plates allow the 7500 door closers to replace the 4040 or 4010 closers without modifying the existing hole pattern in the door. The plates will work with regular and parallel arm applications.

Model Number	Replaces
RP75-4040	LCN-4040XP
RP75-4010	LCN-4010, 4011

Notes:

- The location of the arm shoe on the frame will change, therefore the frame must be patched.

REGULAR ARM

Closer Mounting Plate

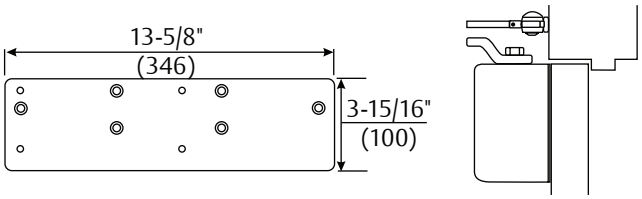

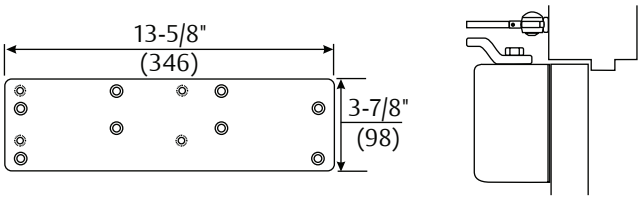

Narrow Top Rail - 7786 Drop Plate: For use where the narrow top rail of the door prevents the closer from being mounted directly to the door surface. This drop plate must be used for closer mounted on a top rail between 1-7/8" and 3-3/8" (48 and 86mm) in height.

Overhead Door Holder - 7786OH Drop Plate: For use when the presence of a surface or concealed overhead door holder prevents normal mounting of closer body due to interference between closer's mounting screws and door holder track. This drop plate's mounting screws are located on the door surface 2-3/8" down from the frame rabbet allowing room for placement of the surface mounted or overhead concealed door stop/holder.

Brackets for Non-Hold Open Arms

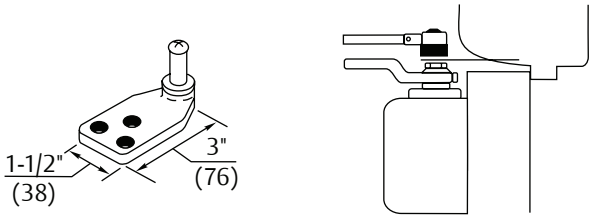

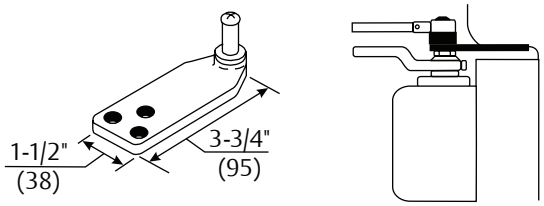

Molded/Bull Nose Trim - 2403B Bracket: For use where the door frame has molded or bull nose trim which will not accept a standard non-hold open shoe. The bracket is mortised into the frame rabbet, and projects beyond the face of the frame. It will accommodate a frame rabbet up to 2" (51mm) deep.

Molded/Bull Nose Trim - 2403-3/4 Bracket: This bracket is similar to - but longer than - the 2403B bracket. It is designed to accommodate frame rabbets from 2" to 2-7/8" (51 to 73mm) deep.

Brackets for Non-Hold Open Arms

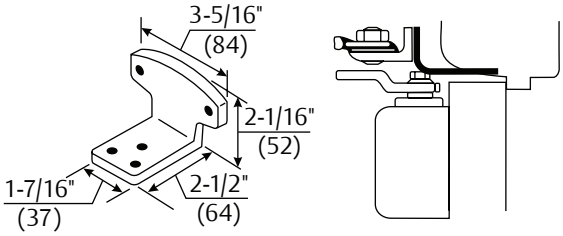

Molded/Bull Nose Trim - 80 Bracket: For use where the door frame has molded or bull nose trim which will not accept a standard hold open shoe. It is mortised into the frame rabbet, and projects beyond the face of the frame. It will accommodate a rabbet up to 2" (51mm) deep. This bracket is used in combination with the standard hold open mounting shoe.

7500 SERIES
INSTITUTIONAL DOOR CLOSER

REGULAR ARM

Corner Brackets for Closer Mounting

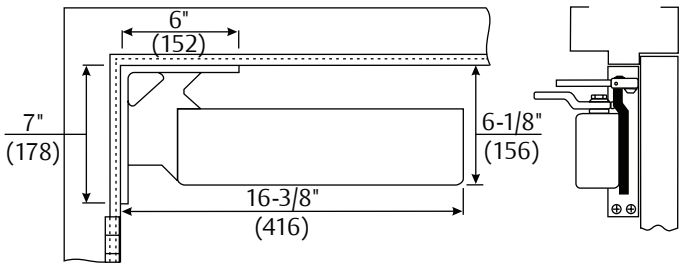

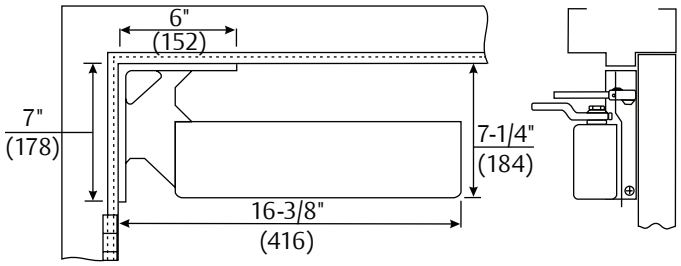

Mounting Opposite Hinge Side - 7798 Standard Drop Corner Bracket: For use where it is desired to mount a regular arm non-hold open closer.

Extra-Drop Mounting Opposite Hinge Side - 7797 Corner Bracket: For use where it is desired to mount a regular arm hold open closer, or where it is necessary for a regular arm non-hold open closer to clear a separate overhead door holder. This bracket drops the closer 1-1/8" (29mm) lower than the 7798 Corner Bracket.

TOP JAMB

Closer Mounting Plates

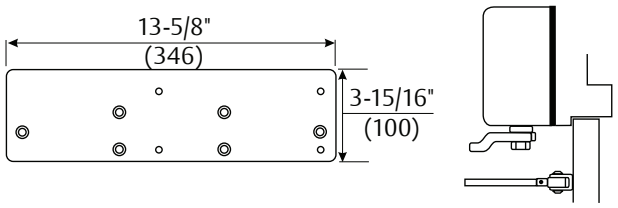

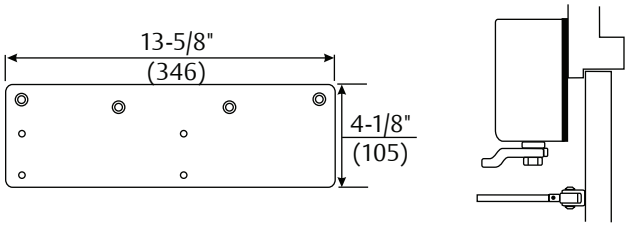

Narrow Frame - 7786 Back Plate: For use where a narrow frame face prevents the closer from being mounted directly to the frame. This back plate must be used for closer mounted on a frame between 1-7/8" and 3-1/8" (48 and 79mm) in height.

Low Ceiling Clearance - Overhead Door Holder - 7787 Drop Plate: For use where the ceiling clearance is between 1-7/8" and 3-7/8" (48 and 98mm) or where a surface or concealed overhead door holder prevents normal top jamb mounting. This plate drops the closer and allows the arm mounting screws to clear the bottom of the door holder. This places the centerline of the arm mounting screws at 3-1/8" (79mm) from the top of the door.

PARALLEL ARM

Closer Mounting Plate

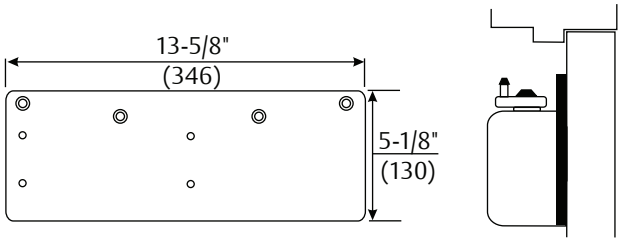

Narrow Top Rail - 7788 Drop Plate: For use where a narrow top rail prevents the closer from being mounted directly to the door surface. This drop plate can be used to mount a closer on a top rail as narrow as 2-1/2" (64mm) in height.

Brackets for Non-Hold Open Arms

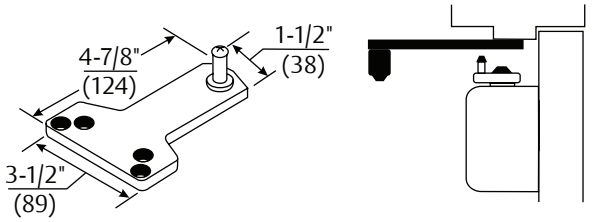

Standard Installation - 1618 Soffit Plate: Supplied standard with parallel arm closers. It can be mounted where the frame soffit is as narrow as 1" (25mm). Specify 1618A-SS for stainless steel soffit plate.

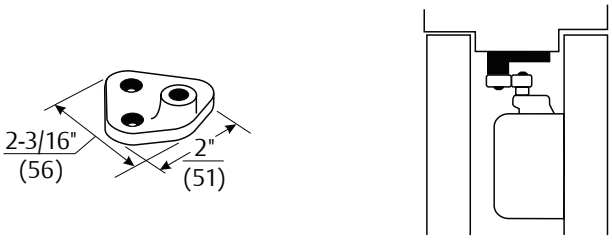

Mounting between Doors - 2018 Soffit Bracket: For use where insufficient space between companion doors does not permit use of other soffit plates. This bracket permits mounting of the closer between doors with as little as 3" (76mm) of header space. Permits closer arm to clear up to 5/8" (16mm) high stop.

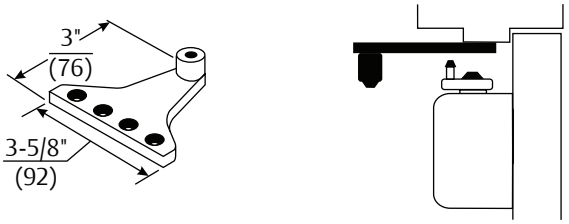

Narrow Frame/Removable Stop - 2018B Soffit Plate: For use where a narrow frame or frame with removable stop does not permit use of the standard soffit plate. This soffit plate may be mounted on the frame soffit or the frame rabbet where the stop does not exceed 5/8" (16mm) in height. All of the screw holes are in a straight line, requiring as little as 1-1/4" (32mm) of frame reveal to mount bracket and maintain good closer arm geometry. Where the frame soffit is as wide as 2" (51mm), this soffit plate may be used to clear weather-stripping that is up to 1-3/8" (35mm) wide and 5/8" (16mm) in height.

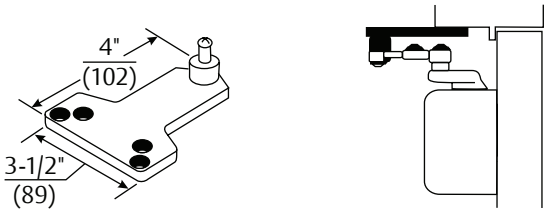

Blade/Applied Stop - 2018D Soffit Plate: For use where a blade or applied stop does not permit installation of the standard soffit plate. Mounts to either the frame soffit or rabbet. Since this soffit plate projects 7/8" (22mm) less than a standard soffit plate, it requires a minimum frame reveal of 1-1/2" (38mm). Permits closer to clear up to a 5/8" (16mm) stop.

7500 SERIES
INSTITUTIONAL DOOR CLOSER

PARALLEL ARM

Brackets for Non-Hold Open Arms (continued)

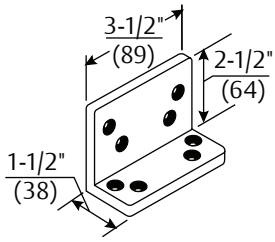

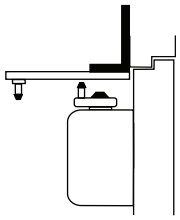

Flush Transom - 2022 Angle Bracket: For use where rabbeted or flush transom conditions prevent installation of a soffit plate. Used in combination with the 1618 soffit plate, or may be used in combination with the 2018S soffit plate when it is necessary for the closer arm to clear a separate overhead door holder.

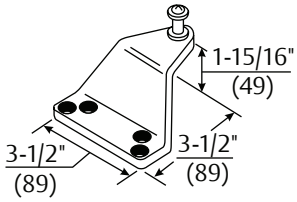

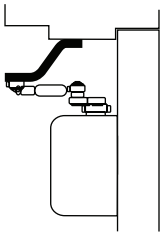

Extra-Clearance - 2018S Offset Soffit Plate: For use where the need for additional clearance prevents use of the standard soffit plate. This plate mounts to the frame soffit to provide up to 2" (51mm) of clearance when a separate overhead door holder is used. Standard mounting requires a 2-5/8" (67mm) wide frame soffit. It may also be used where unusually high frame stops or weather-stripping prevent the use of other soffit plates.

Brackets for Hold Open Arms

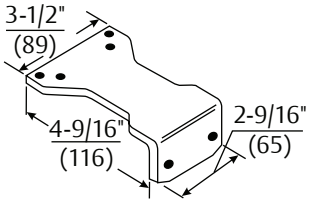

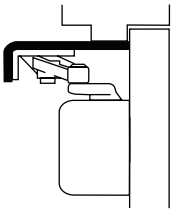

Parallel Hold Open - 1628H Adapter Plate: Supplied standard with all parallel arm hold open closers. It can also be used to convert regular arm or top jamb hold open arms to parallel arm installation. It can be mounted where the frame soffit is as narrow as 1" (25mm).

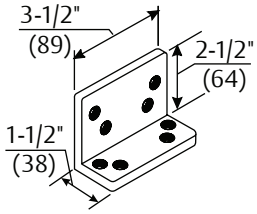

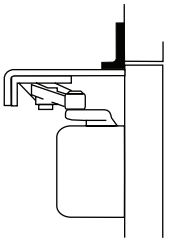

Flush Transom Hold Open - 2022 Angle Bracket: For use where rabbeted or flush transom conditions prevent installation of the standard 1628H hold open adapter plate. It is used in combination with the 1628H adapter plate.

PARALLEL RIGID ARM

Closer Mounting Plate

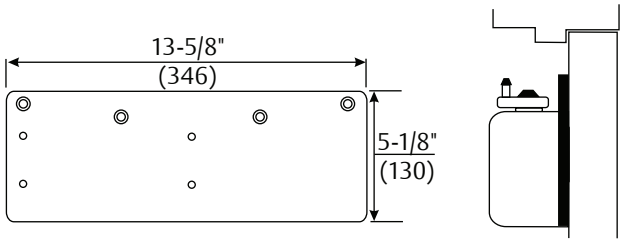

Narrow Top Rail - 7788 Drop Plate: For use where a narrow top rail prevents the closer from being mounted directly to the door surface. This drop plate can be used to mount a closer on a top rail as narrow as 2-1/2" (64mm) in height.

Brackets for Non-Hold Open Arms & Hold Open Arms

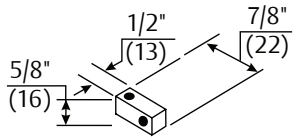

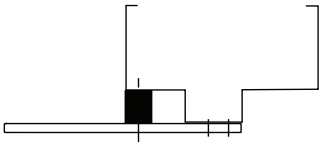

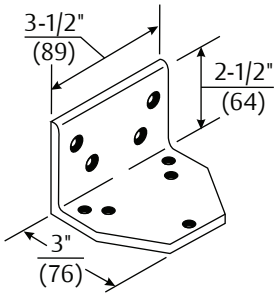

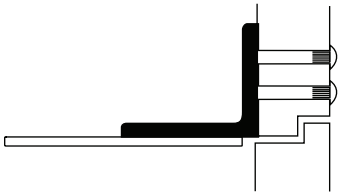

Standard - 2019S Spacer Block: For use where a narrow frame soffit does not provide adequate support for the soffit plate. Supplied as standard with all parallel rigid arm closers.

Flush Rabbeted Transom - 2019L Angle Bracket: For use where flush transom conditions prevent mounting of the standard soffit plate. This bracket is used in combination with the standard soffit plate.

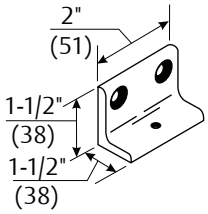

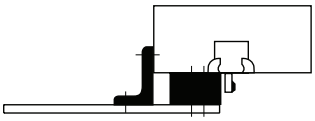

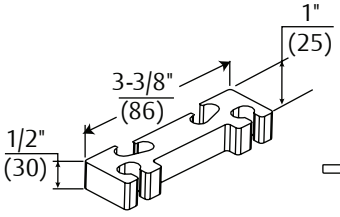

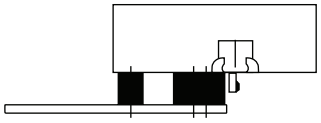

Narrow Frame - 6890 Support Bracket: For use where the frame is narrow, and the soffit plate cannot be mounted directly to the frame soffit or rabbet. Used in combination with the 6891 Spacer B lock on blade stop frames to provide extra support and needed clearance of the blade stop. Used on frames where the frame stop does not exceed 5/8" (11mm) in height.

Clearance/Support Blade Stop - 6891 Spacer Block: For use where the door frame has a blade stop and the soffit plate must be mounted on the frame rabbet. This accessory is used in combination with the standard spacer block to provide clearance of the blade stop.

7500 SERIES
INSTITUTIONAL DOOR CLOSER

CLOSERPLUS® ARMS

Closer Mounting Plate

Narrow Top Rail - 7788 Drop Plate: For use where a narrow top rail prevents the closer from being mounted directly to the door surface. This drop plate can be used to mount a closer on a top rail as narrow as 2-1/2" (64mm) in height.

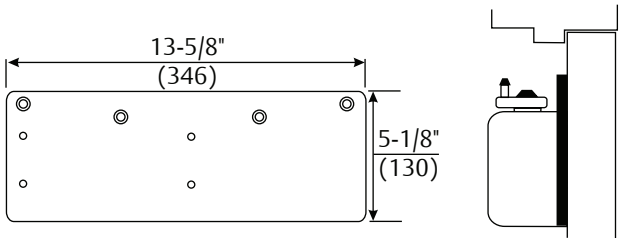

Brackets for Non-Hold Open Arms & Hold Open Arms

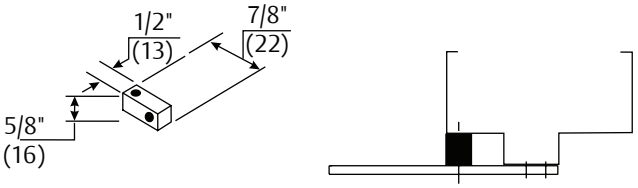

Standard - 2019S Spacer Block: For use where a narrow frame soffit does not provide adequate support for the soffit plate. Supplied as standard with all parallel rigid arm closers.

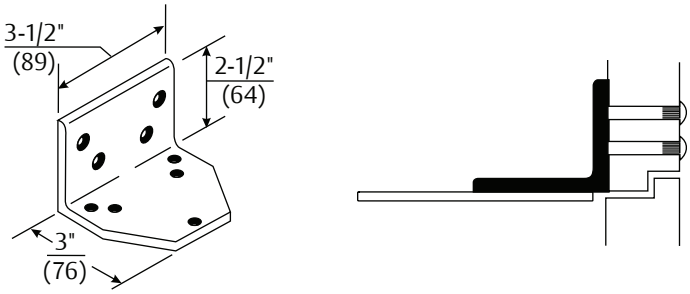

Flush Rabbeted Transom - 2019L Angle Bracket: For use where flush transom conditions prevent mounting of the standard soffit plate. This bracket is used in combination with the standard soffit plate.

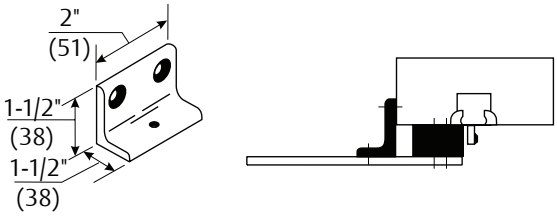

Narrow Frame - 6890 Support Bracket: For use where the frame is narrow, and the soffit plate cannot be mounted directly to the frame soffit or rabbet. Used in combination with the 6891 Spacer Block on blade stop frames to provide extra support and needed clearance of the blade stop. Used on frames where the frame stop does not exceed 5/8" (11mm) in height.

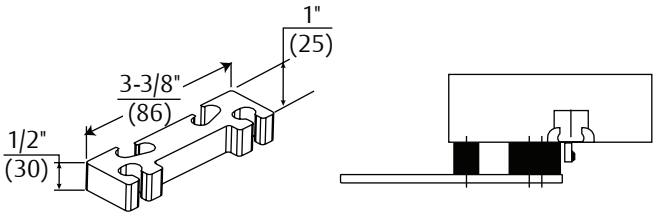

Clearance/Support Blade Stop - 6891 Spacer Block: For use where the door frame has a blade stop and the soffit plate must be mounted on the frame rabbet. This accessory is used in combination with the standard spacer block to provide clearance of the blade stop.

UNITROL® ARM

Closer Mounting Plate (for Parallel Arm)

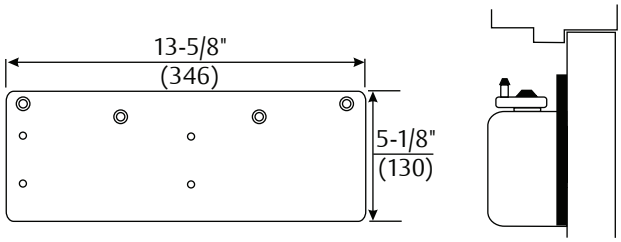

Narrow Top Rail - 7788 Drop Plate: For use where a narrow top rail prevents the closer from being mounted directly to the door surface. This drop plate can be used to mount a closer on a top rail as narrow as 2-3/8" (60mm) in height.

Soffit Plate Reinforcing Brackets (for Parallel Arm)

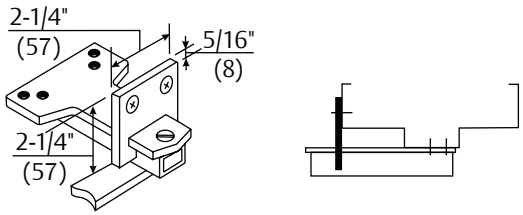

Additional Support - 6190 Reinforcing Bracket: Standard for use with all Parallel Arm Unitrol Door Controls. Provides additional support to the soffit plate on installations with door frame reveals from 1-7/8" to 4-5/8" (48 to 117mm).

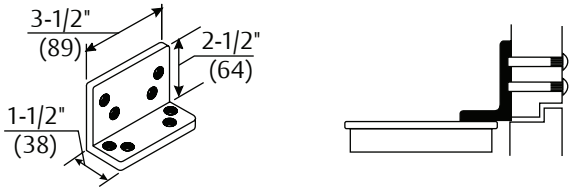

Flush Rabbeted Transom - 2022 Angle Bracket: Optional for use with all Parallel Arm Unitrol Door Controls. For use where rabbeted or flush transom conditions prevent installation of the soffit plate assembly. This bracket fastens to the overhead transom to provide a mounting surface for the soffit plate assembly.

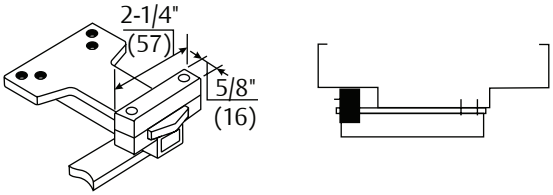

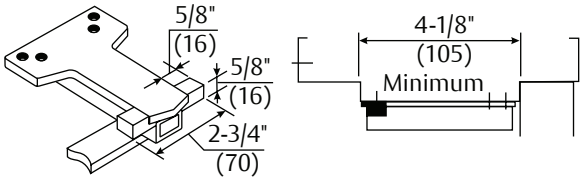

Wide Frame - 6191 Reinforcing Kit: Optional for use with all Parallel Arm Unitrol Door Controls. Used to support the soffit plate on installations with wide frames. Clamps may be used with or without the spacer block, depending on frame conditions.

Closer Mounting Plate (for Top Jamb)

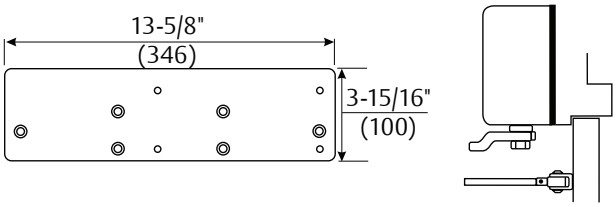

Standard Installation - 7786 Back Plate: Can be mounted where a frame face is as narrow as 1-5/8" (41mm) in height.

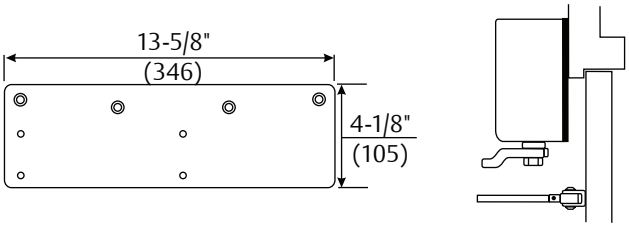

Minimum Ceiling Clearance - 7787 Drop Plate: For use where the ceiling clearance is as little as 1-7/8" (48mm).

7500 SERIES
INSTITUTIONAL DOOR CLOSER

SLIDE TRACK

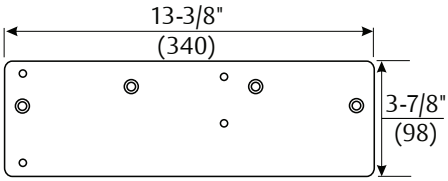

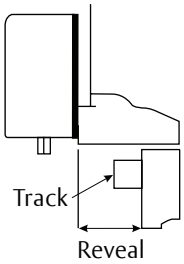

Slide Track - 7786JP Back Plate: Required for frames with standard 2" (51mm) profile face. Without plate, minimum 4" (102mm) face frame required.

NORTON RIXSON

ASSA ABLOY

7500 SERIES
INSTITUTIONAL DOOR CLOSER

DOOR CLOSER BODY ASSEMBLIES

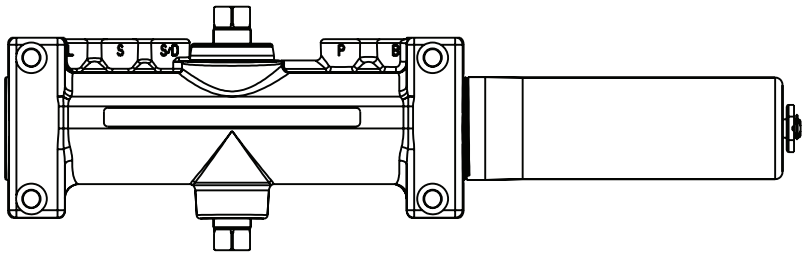

Model Number	Description
7500LAP	Multi-Size Closer Body
7500SSLAP	Corrosion Resistant Closer Body

LAP = Less All Parts

Torx® Screw Pack	
Arm Type	**Model Number**
Regular, Top Jamb & Parallel	TX47
Parallel Rigid, CloserPlus® CloserPlus Spring™	PRTX47
Regular Rigid Heavy-Duty	RTX47
Unitrol® Arm	UNITX47
Slide Track	STTX47

Closer Series	Cover Material	Model No.	Dimensions (Inches/mm)
7500	Plastic	7700P & 7700PG	13-3/4 (349) x 4" (102) x 2-1/8" (54)
	Metal	7700M	13-5/8" (346) x 3-7/8" (98) x 2-3/16" (56)

STEEL DOOR APPLICATION

Sleeve Nut: "SN" (4 per pack) or
Sleeve Nut & Screw: "SNB" (4 per pack)

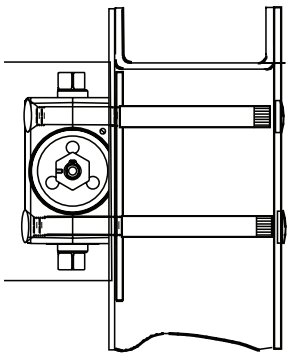

Door Thickness	SN's	SNB's
1-3/4"	SN-134	SNB134-47
2"	NA	SNB200-47
2-1/4"	SN-214	SNB214-47
S.S. SNB'S 1-3/4" (Stainless Steel)	SN-134SS	SNB134SS-47

ALUMINUM AND WOOD DOOR APPLICATION
(ALUMINUM DOOR SHOWN)

Through-Bolt & Grommet Nut:
"TBGN" (4 per pack)

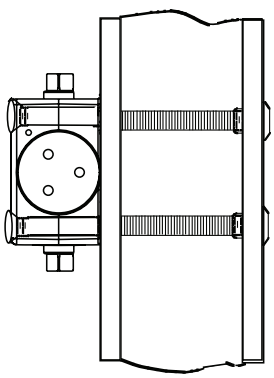

Door Thickness	SN's
1-3/8"	TBGN138-47
1-3/4"	TBGN134-47

7500 SERIES
INSTITUTIONAL DOOR CLOSER

NON-HOLD OPEN ARM ASSEMBLIES

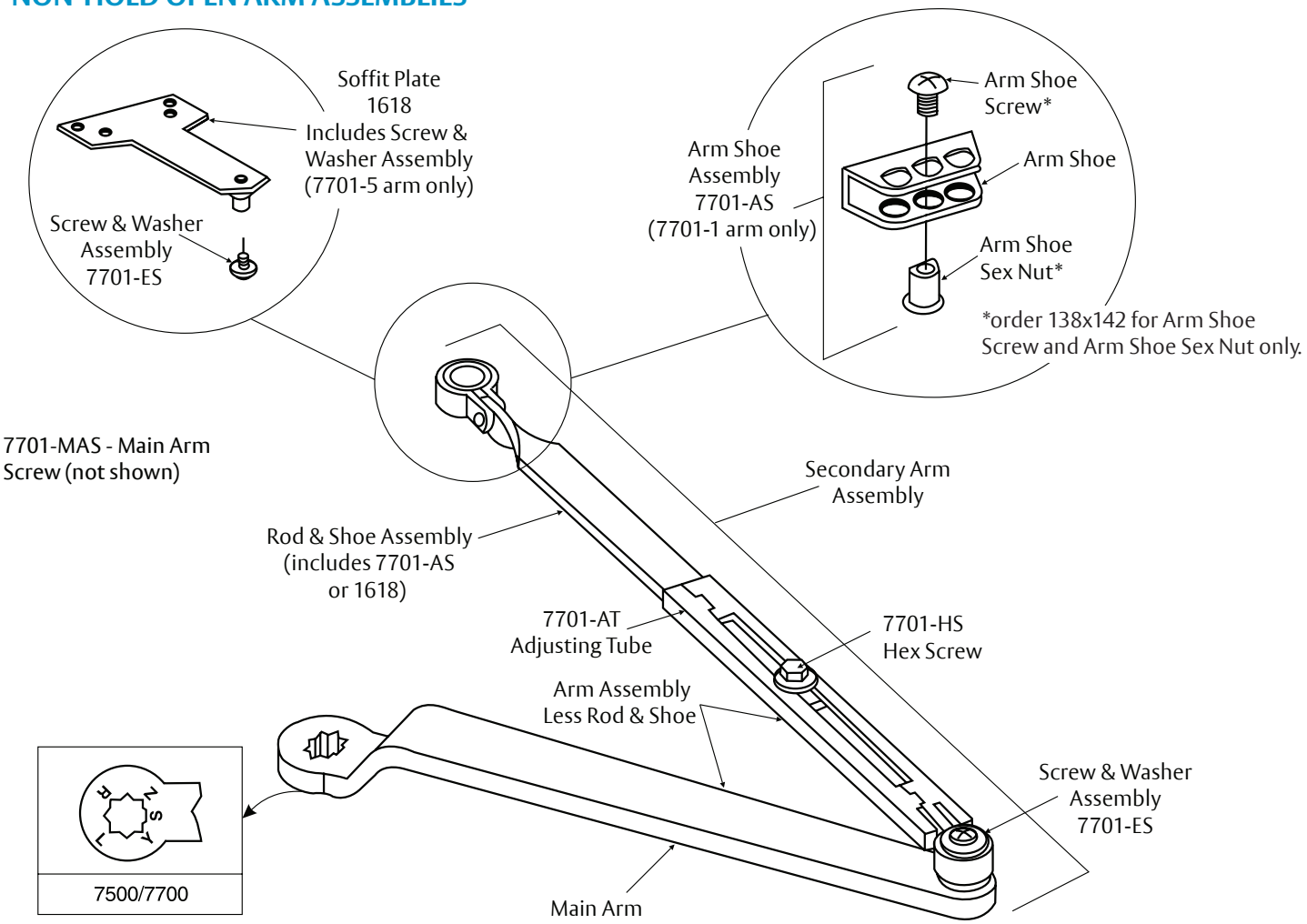

Note: Mounting hardware included with all parts orders.

Closer Series	Complete Arm Assembly	Main Arm Assembly[1] (length)(mm) (includes 7701-ES)	Secondary Arm Assembly (includes 7701-ES)	Arm Assembly Less Rod and Shoe	Rod & Shoe Assembly[2] (length)(mm)
R7570	7701-1	7701-1M (11)(279)	7701-111	7701-1W	7701-11 (8-7/8)(225)
J7500	7701-1A		7701-121		7701-11A (12-9/16)(319)
JL7500	7701-1B	7701-2M (13-1/2)(343)	7701-131	7701-2W	7701-11B (15-3/16)(386)
P7500	7701-5	7701-1M (11)(279)	7701-115	7701-1W	7701-15 (8-7/8)(225)
P7500[3]	7701-5A		7701-115A		7701-15A (12-9/16)(319)
7500	7701-25 (tri-packed includes 7701-1 plus 1618 plate)	1. C to C length shown in parentheses. 2. C of connecting link to end of rod shown in parentheses. 3. For 180° door swing when using a special template for doors hung on 6" to 8" (152 to 203mm) wide throw hinges.			

NORTON RIXSON

ASSA ABLOY

7500 SERIES
INSTITUTIONAL DOOR CLOSER

STAINLESS STEEL ARM ASSEMBLIES

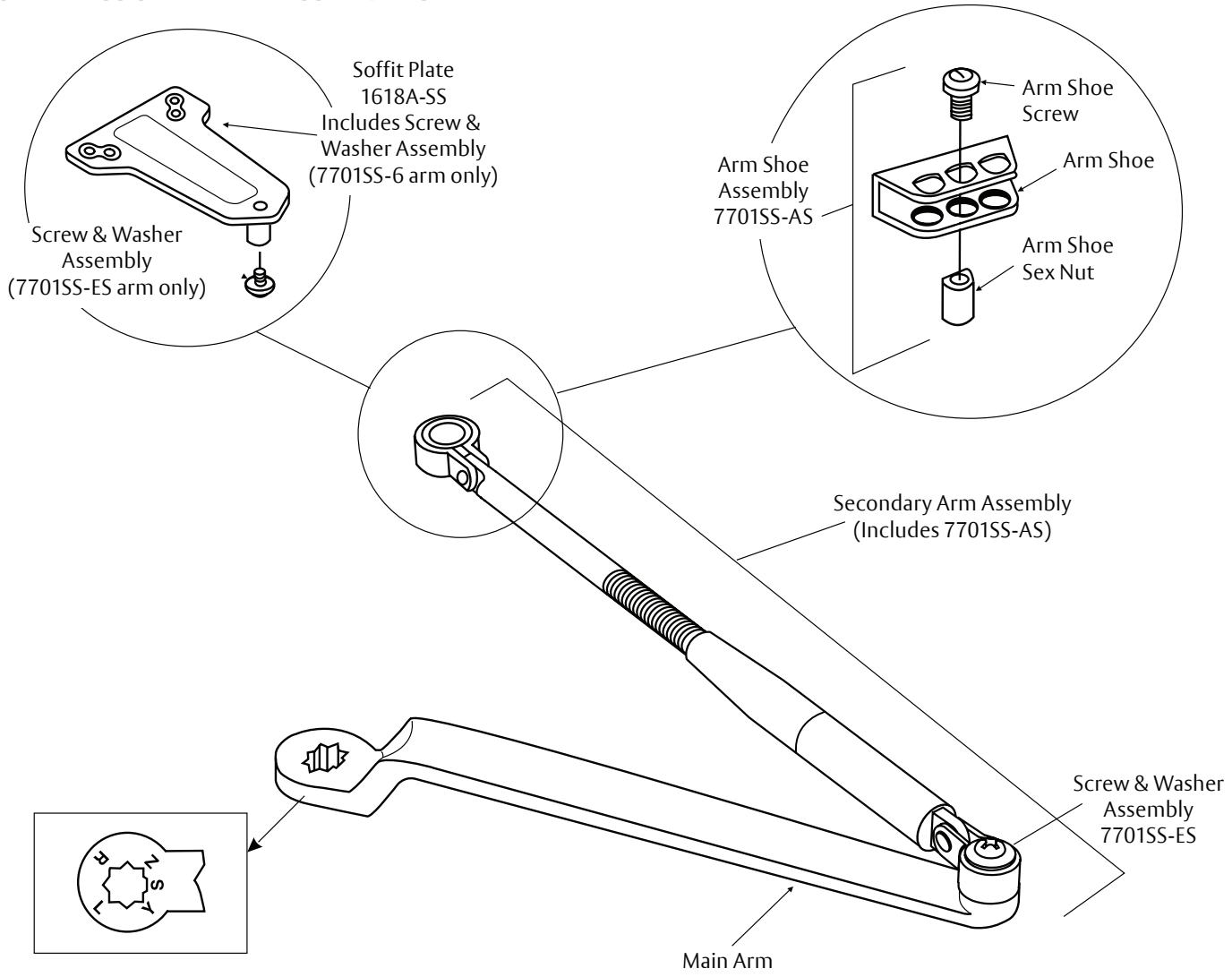

Note: Mounting hardware included with all parts orders.

Closer Series	Complete Arm Assembly	Main Arm Assembly[1] (length)(mm) (includes 7701SS-ES)	Secondary Arm Assembly (includes 7701SS-ES)
7500SS	7701SS-1	7701SS-1M (11)(279)	7701SS-111
J7500SS	7701SS-1A		7701SS-121
P7500SS	7701SS-6		7701SS-116

1. C to C length shown in parentheses

7500 SERIES
INSTITUTIONAL DOOR CLOSER

HOLD OPEN ARM ASSEMBLIES

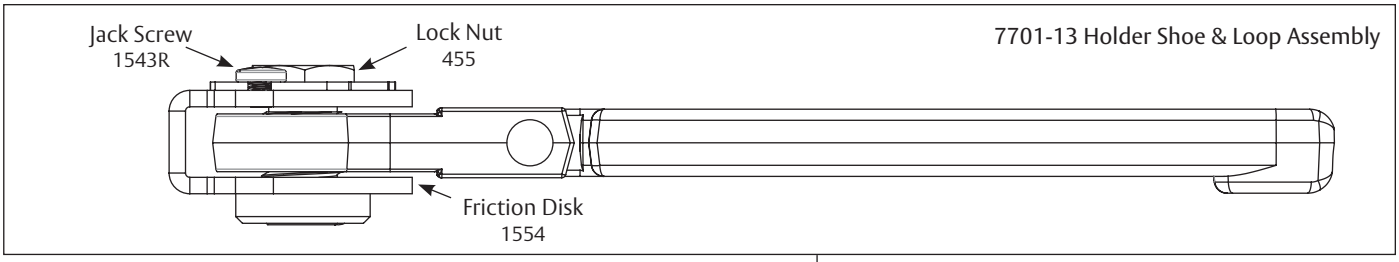

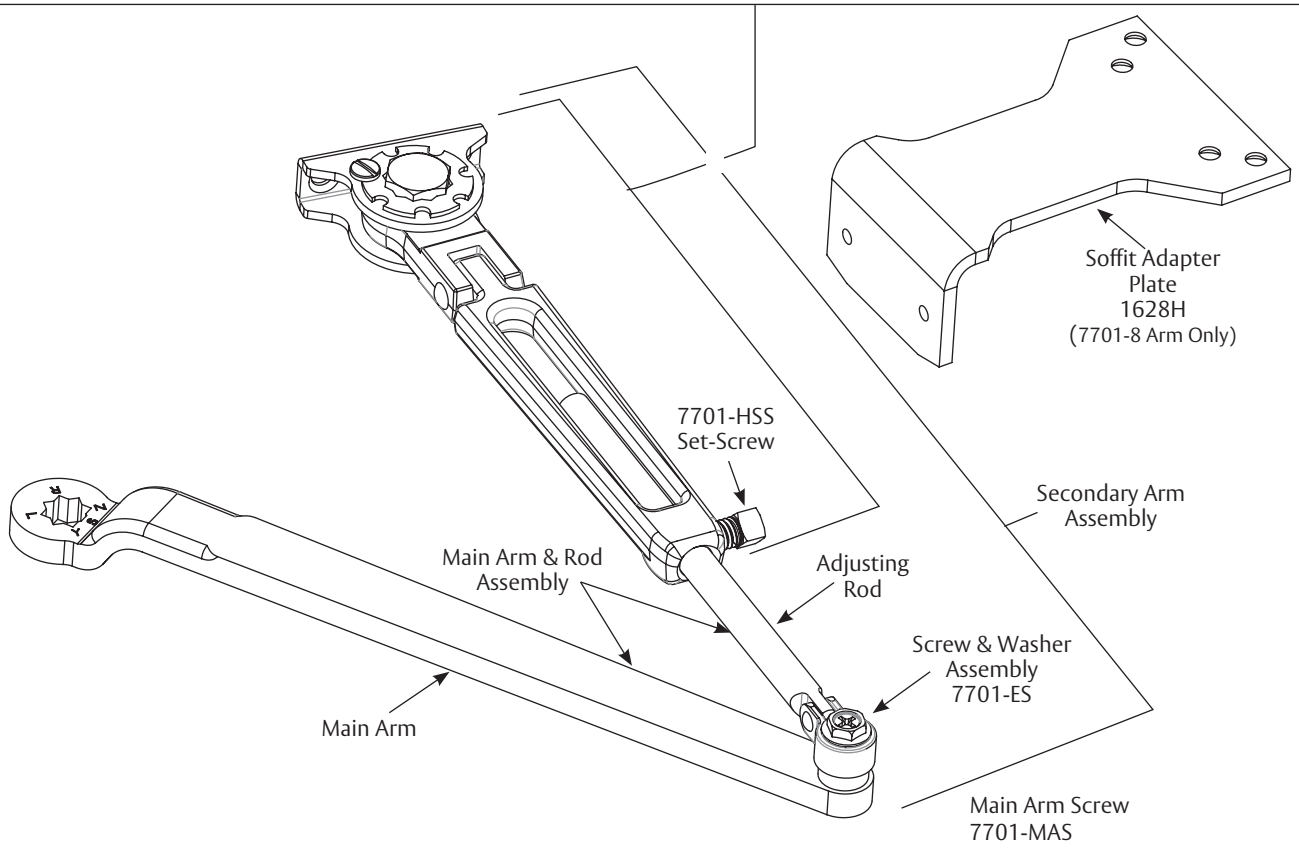

Note: Mounting hardware included with all parts orders.

Closer Series Assembly	Complete Arm Assembly	Main Arm[1] (length)(mm) (includes 7701-ES)	Secondary Arm Assembly (includes 7701-ES)	Main Arm & Rod Assembly	Holder Shoe & Loop Assembly	Adjusting Rod[2] (Length)(mm)
7500H	7701-3/7701-8[3]	7701-1M (11)(279)	7701-113/7700-118 (Reg.) / (Par.)	7701-3W	7701-13	7701-31 (7-3/8)(187)
JL7500	7701-3A		7701-123	7701-3WA		7701-31A (10-13/16)(275)
JL7500H	7701-3B	7701-2M (13 -1/2)(343)	7701-133	7701-3WB		7701-31B (12-7/8)(327)

1. C to C length shown in parentheses.
2. C of connecting link to end of rod shown in parentheses.
3. Same as 7701-3 but includes 1628H soffit adapter plate.

PARALLEL RIGID ARM ASSEMBLIES

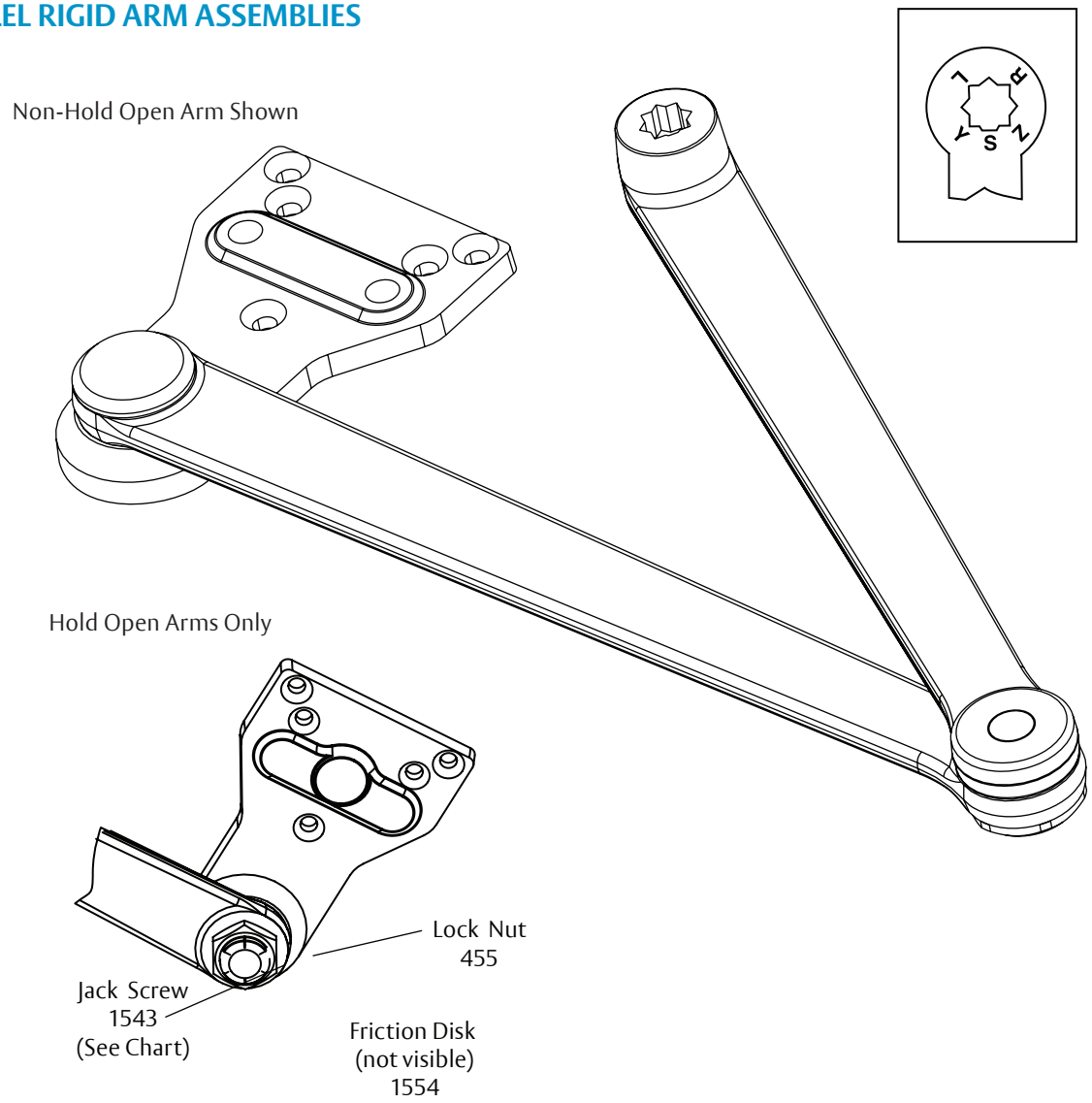

Note: Mounting hardware included with all parts orders.

Arm Function	Complete Arm Assembly	Jack Screw
Non-Hold Open	PR7701-5	N/A
Hold Open	PR7701-8R (Right Hand)	1543R
	PR7701-8L (Left Hand)	1543L

7500 SERIES
INSTITUTIONAL DOOR CLOSER

CLOSERPLUS® ARM ASSEMBLIES

CLP
Non-Hold Open

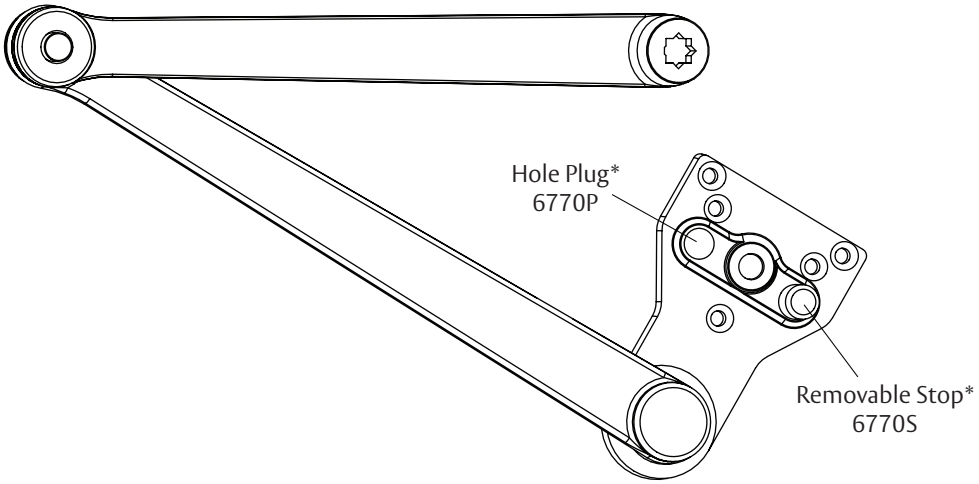

CLP-T
Thumbturn Hold Open

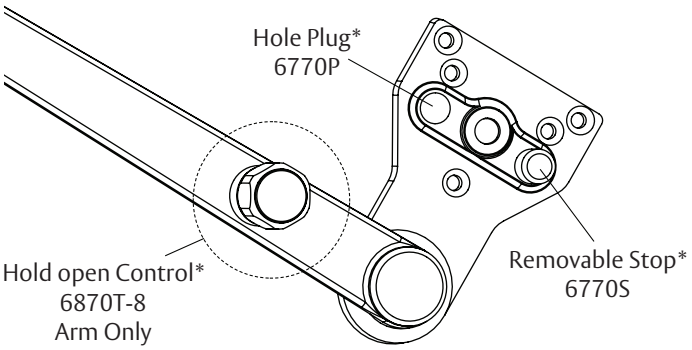

CLP-R
Ramp Hold Open

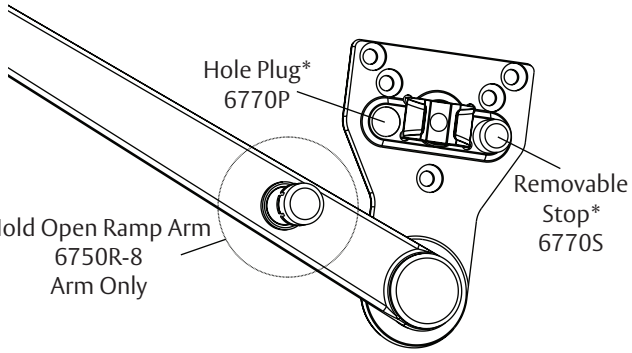

Note: Mounting hardware included with all parts orders.

Arm Function	Complete Arm Assembly
Non-Hold Open	6770-5
Thumbturn Hold Open	6870T-8
Ramp Hold Open	6750R-8

* These parts and screw pack are included with complete arm assemblies.

CLOSERPLUS SPRING™ ARM ASSEMBLIES

Non-Hold Open Arm Shown

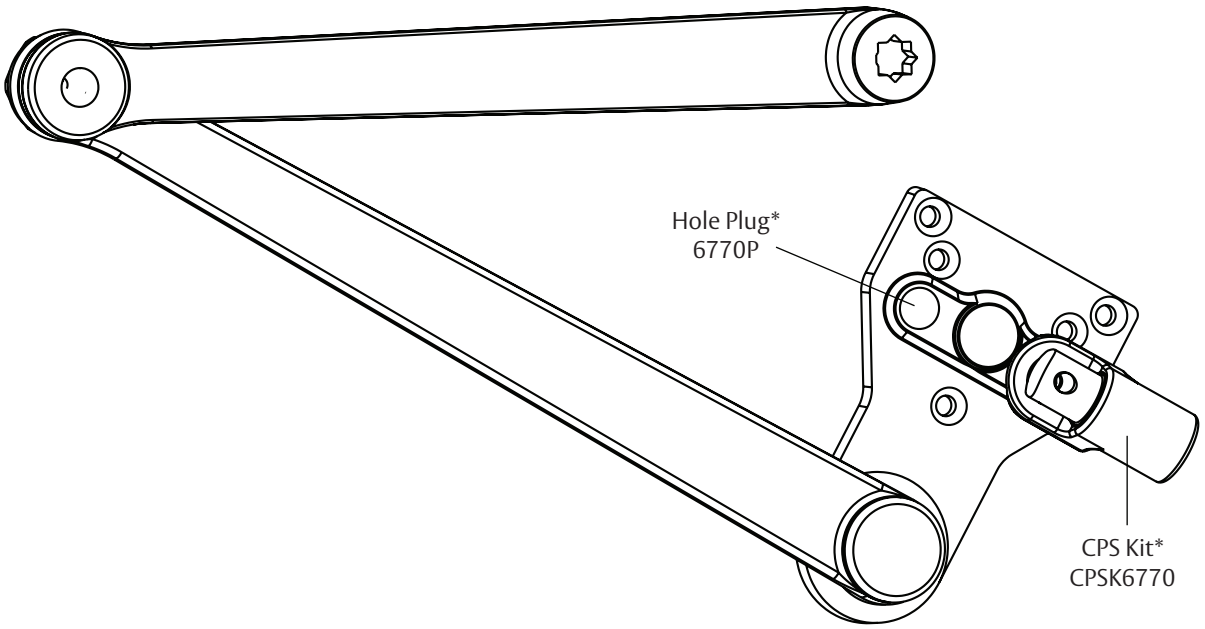

Note: Mounting hardware included with all parts orders.

Arm Function	Complete Arm Assembly
Non-Hold Open	CPS6770-5
Thumbturn Hold Open	CPS6870T-8

* These parts and screw pack are included with complete arm assemblies.

7500 SERIES
INSTITUTIONAL DOOR CLOSER

REGULAR RIGID HEAVY-DUTY ARM

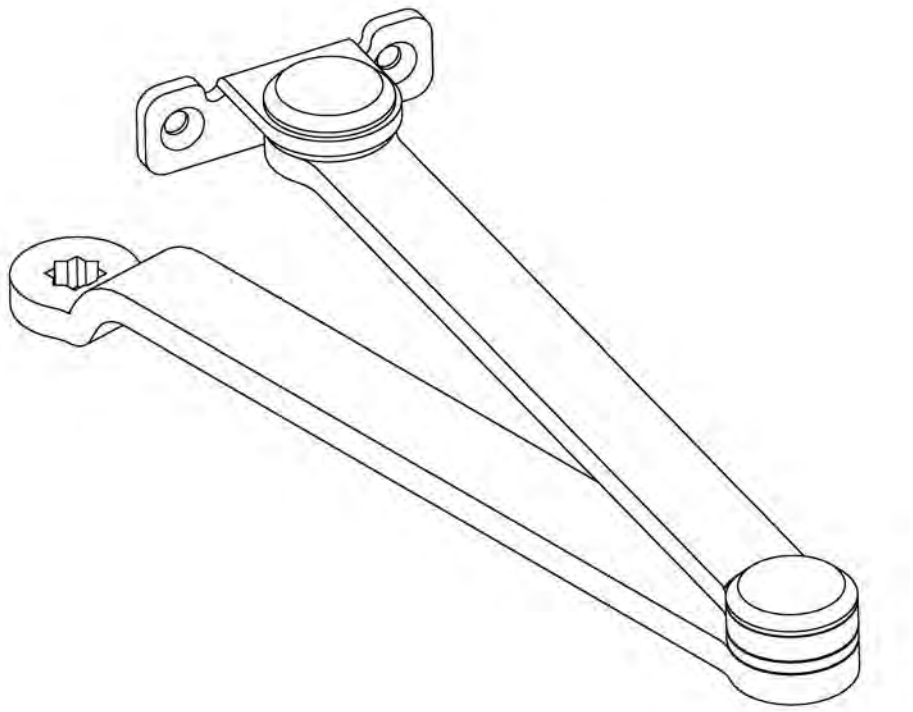

Note: Mounting hardware included with all parts orders.

Closer Series	Arm Function	Complete Arm Assembly
R7500	Non-Hold Open	R7701-1 Furnished with standard fasteners
7570*		7771-1 Furnished with Torx fasteners

* Refer to 7570 Security Closer Section

PARALLEL RIGID OFFSET ARM ASSEMBLIES

Non-Hold Open

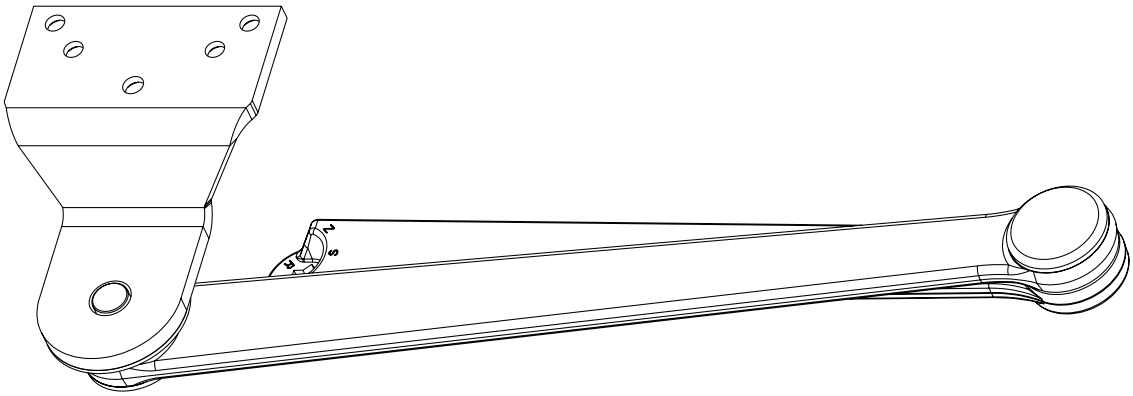

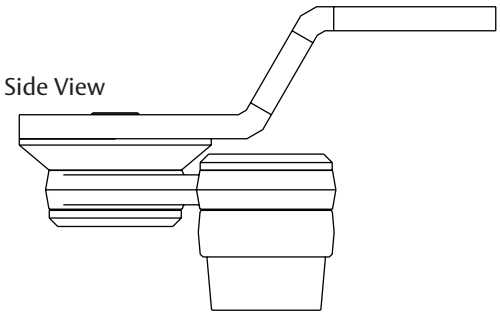

Side View

Note: Mounting hardware included with all parts orders.

Complete Arm Assembly	Arm Function
PRO7701-5	Non-Hold Open
PRO7701-8R	Hold Open, Right Hand
PRO7701-8L	Hold Open, Left Hand

7500 SERIES
INSTITUTIONAL DOOR CLOSER

UNITROL® ARM ASSEMBLIES

Parallel Arm

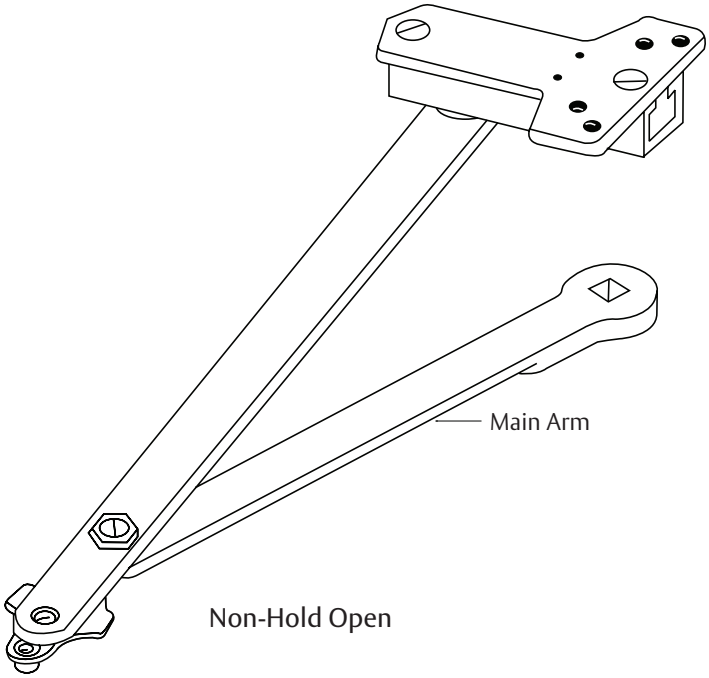

Non-Hold Open

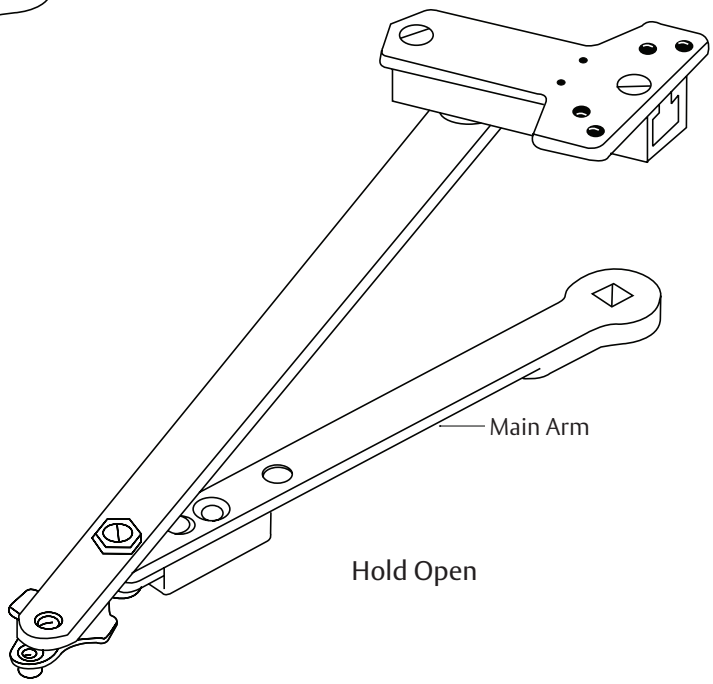

Hold Open

Note: Mounting hardware included with all parts orders.

Door Width (cm)	Main Arm Length* (mm)	Complete Arm Assembly	
		Non-Hold Open	Hold Open
28" - 32" (71- 81)	9-1/2" (241)	6100-11	6100-1
33"- 41" (84 - 104)	11" (279)	6100-13	6100-3
42" - 48" (107 - 122)	12-1/2" (318)	6100-14	6100-4

Only available in painted finishes.

NORTON RIXSON

ASSA ABLOY

7500 SERIES
INSTITUTIONAL DOOR CLOSER

UNITROL® ARM ASSEMBLIES

Top Jamb

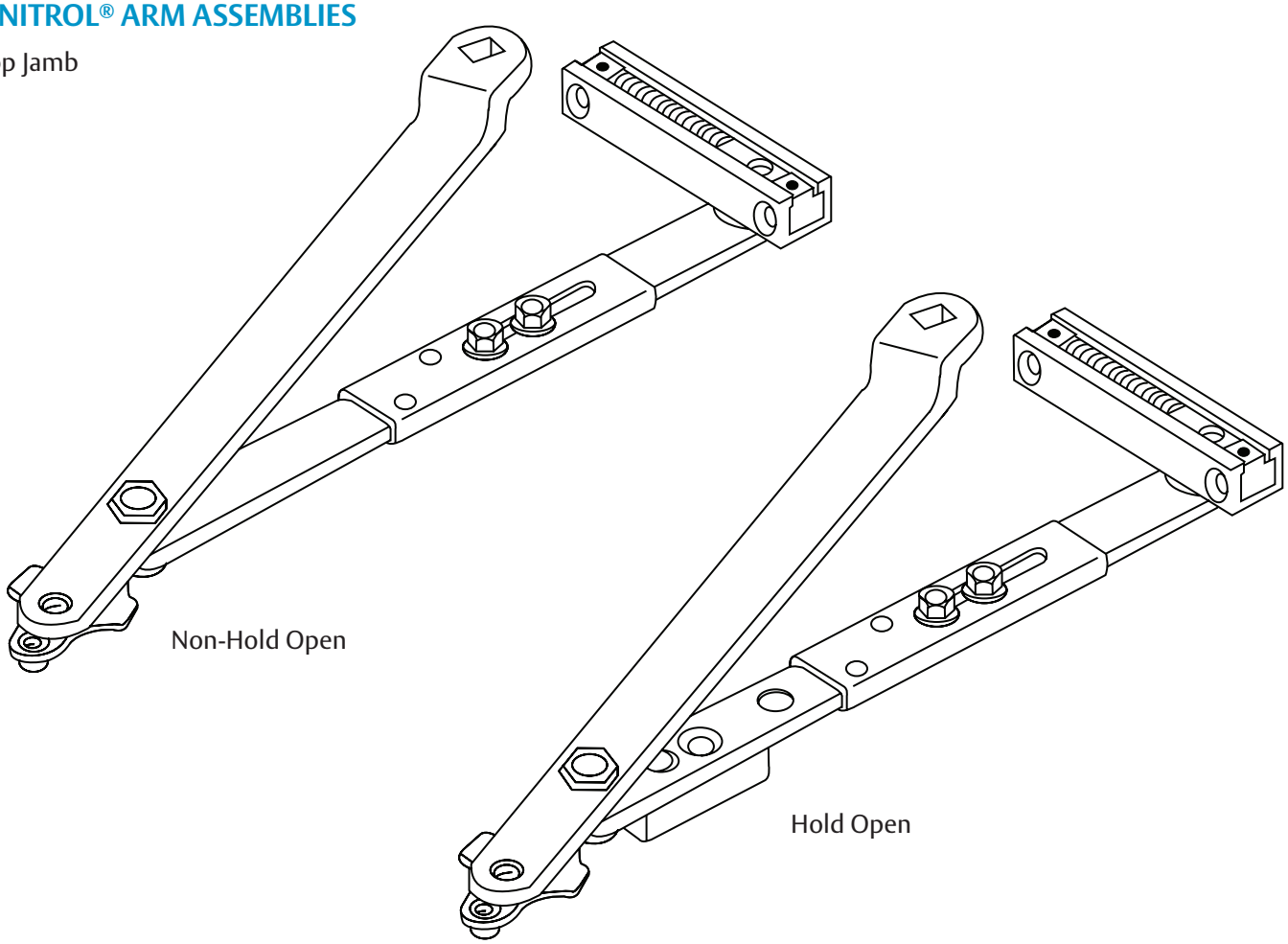

Non-Hold Open

Hold Open

Note: Mounting hardware included with all parts orders.

Complete Arm Assembly		For Frame Reveals (mm)
Non-Hold Open	Hold Open	
J6100-4	J6100-7	2-1/8" - 3-1/4" (54 - 83)
J6200-4	J6200-7	1/2" - 2" (13 - 51)
J6400-4	J6400-7	3-3/8" - 4-1/4" (86 - 108)
J6500-41	J6500-71	4-3/8" - 5-3/8" (111 - 137)
J6500-42	J6500-72	5-1/2" - 6-3/8" (140 - 162)
J6500-43	J6500-73	6-1/2" - 7-3/8" (165 - 187)
J6600-4	J6600-7	0" - 3/8" (0 - 10)

Only available in painted finishes.

7500 SERIES
INSTITUTIONAL DOOR CLOSER

LOW PROFILE ARM ASSEMBLIES

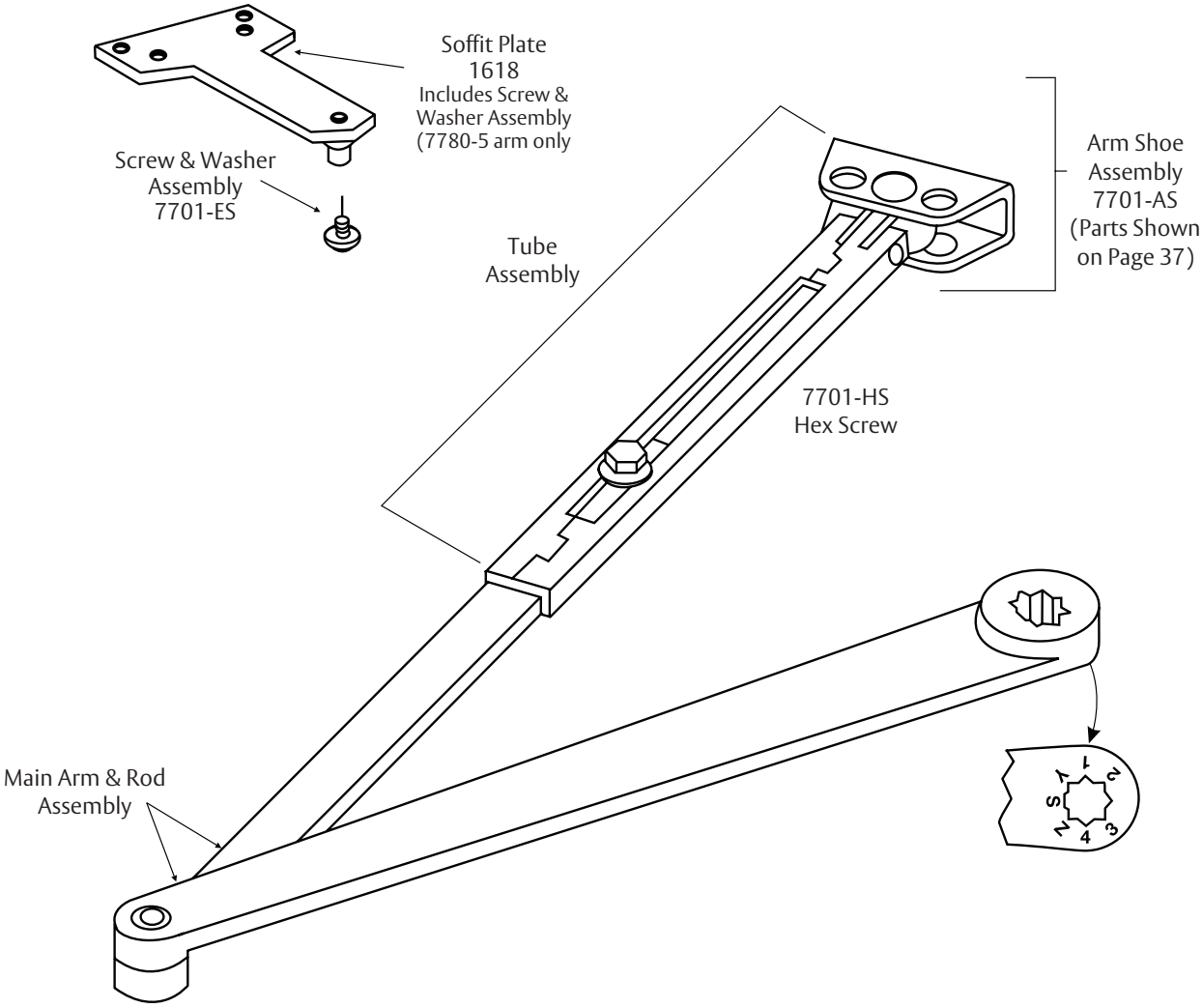

Note: Mounting hardware included with all parts orders.

Arm Application	Complete Arm Assembly	Main Arm & Adjusting Rod Assembly	Tube & Shoe/Soffit Assembly
Regular Arm	7780-1	7780-1MR	7780-1TS (With 7701-AS)
Parallel Arm	7780-5		7780-5TS (With 1618)
Tri-pack	7780-25		

TRACK ASSEMBLIES

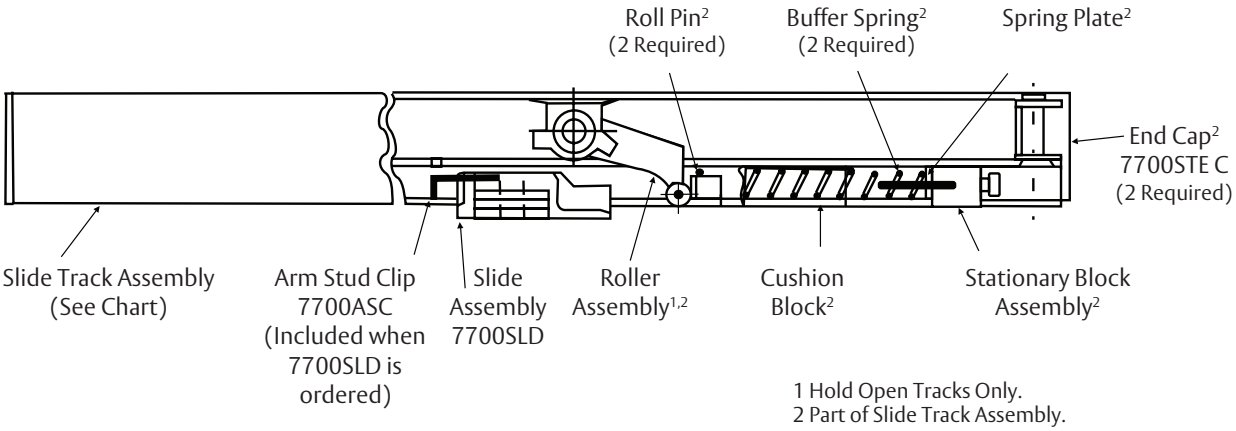

1 Hold Open Tracks Only.
2 Part of Slide Track Assembly.

* Consists of track, slider assembly and two end caps
Auxiliary door stop required.

Note: Mounting hardware included with all parts orders.

Track Assemblies	Part Number	
	Non-Hold Open	Hold Open
Pull side mounted	7701ST-1T	7701ST-3T
Push side mounted	7701ST-5T	7701ST-8T
Pull side mounted (180°)	7701ST-1T180°*	N/A

7500 SERIES
INSTITUTIONAL DOOR CLOSER

TRACK ASSEMBLIES

Standard Arm Assembly

7701ST-1A[1,2]

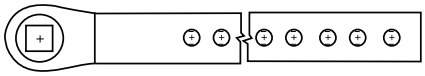

Arm Tube Assembly
7701ST-1AT[1]

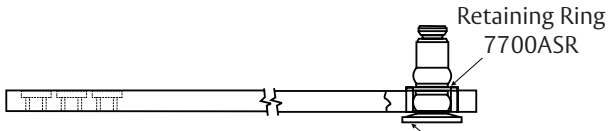

Adjusting Rod Assembly
7701ST-1AR[1]

Arm Stud
7700AS

Double Egress Arm Assembly

7701PT-DE-1R (Right Hand)[1,2]
7701PT-DE-1L (Left Hand)[1,2]

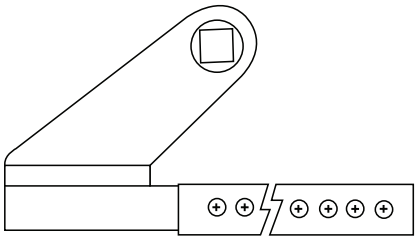

Arm Tube Assembly
7701ST-1ATR[1] (right hand)
7701ST-1ATL[1] (left hand)

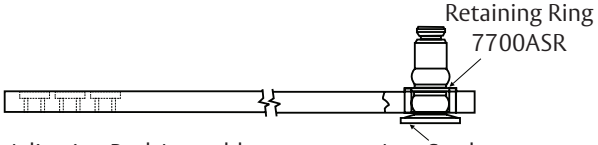

Adjusting Rod Assembly
7701ST-1AR[1]

Arm Stud
7700AS

STP Arm Assembly (Pocket Doors Only)

7701STP-1A[1,2]

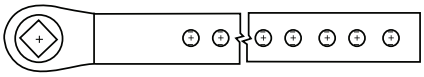

Arm Tube Assembly
7701STP-1AT[1]

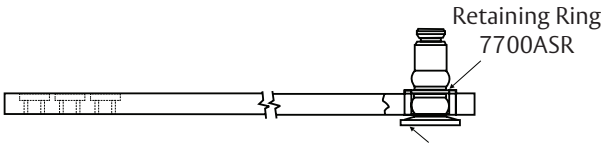

Adjusting Rod Assembly
7701ST-1AR[1]

Arm Stud
7700AS

1 Includes arm length adjusting screw 7700ALAS
2 Includes arm tube & adjusting rod assembly

Note: Mounting hardware included with all parts orders.

TRACK ASSEMBLIES - SHALLOW DEPTH

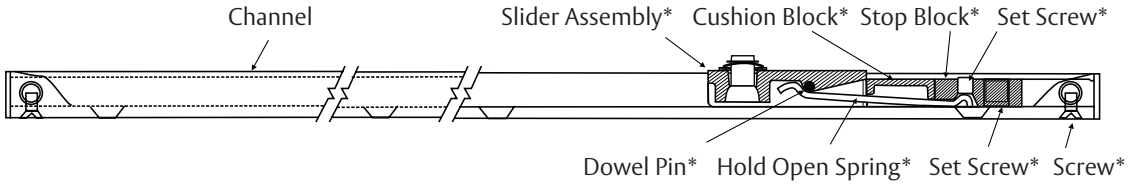

*Part of an Assembly Pack
NHO=7740SLD
HO=7740HSLD

Note: Mounting hardware included with all parts orders.

Track Assemblies	Part Number	
	Non-Hold Open	Hold Open
Pull side mounted	7740ST-1T	7740ST-3T
Push side mounted	7740ST-5T	7740ST-8T

Arm Assembly

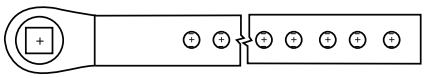

Arm Tube Assembly
7701ST-1AT[2]

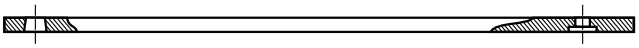

Adjusting Rod Assembly
7740ST-1AR[2]

1 Includes arm length adjusting screw.
2 Includes arm tube & adjusting rod assembly.

7500 SERIES
INSTITUTIONAL DOOR CLOSER

FASTENERS

Standard Fasteners	With Arms Specified Below					
	Regular Parallel & Top Jamb	Low Profile	Parallel Rigid (PR) CloserPlus (CLP) CloserPlus Spring (CPS)	Unitrol (UNI)	Unitrol-J (UNI-J)	Slide Track (ST)
Door						
Self Drilling Self Tapping	S	S	S	S		
Machine Screw	S	S	S	S	S	S
Sleeve Nut/Sex Nut			S	S	S	S
Frame						
Self Drilling Self Tapping	S	S	S	S	S	S
Machine Screw	S	S	S	S	S	S

S = Standard
Fasteners are standard (included) with closer package.
Examples:
7500 includes self drilling, self tapping and machine screws
PR7500 includes self drilling, self tapping, machine screws and sleeve nut/sex nuts

Optional Fasteners	Description	With Arms Specified Below					
		Regular Parallel & Top Jamb	Low Profile	Parallel Rigid (PR) CloserPlus (CLP) CloserPlus Spring (CPS)	Unitrol (UNI)	Unitrol-J (UNI-J)	Slide Track (ST)
Door							
SN^	Sleeve Nut/Sex Nut	O	O				
TBGN^	Thru Bolts & Grommet Nuts	O	O	O	O	O	O
SMS*	Sheet Metal Screws & Machine Screws	O	O	O	O	O	O
SSPxSMS	Standard Screw Pack & Sheet Metal Screws	O	O	O	O	O	O
TORX®*	Torx Drive Security Screw	O	O	O	O	O	O
Frame							
SMS*	Sheet Metal Screws & Machine Screws	O	O	O	O	O	O
SSPxSMS	Standard Screw Pack & Sheet Metal Screws	O	O	O	O	O	O
TORX®*	Torx Drive Security Screw	O	O	O	O	O	O

O = Optional
^ When SN or TBGN are ordered, standard screw packs are also furnished.
***When SMS or TORX screws are specified, standard screw packs ARE NOT furnished.**
Examples:
7500 x **SN** includes self drilling, self tapping, machine screws and sleeve/sex nuts
7500 x **SMS** includes sheet metal screws and machine screws

SN are for use on hollow metal doors and can also be used for thru bolting on wood doors. When selected, SNs are supplied for 1-3/4" (44mm) thick doors unless specified for 2-1/4" (57mm) thick doors

TBGN are an alternative to SN for wood doors. When selected, TBGNs are supplied standard for 1-3/4" (44mm) thick doors. They can be specified for 2-1/4" (57mm) thick doors.

SMS - when the option is specified, closer will be packed with sheet metal screws for the door and sheet metal screws plus machine screws for the frame.

FINISHES

Norton Rixson offers waterborne acrylic, polyster powder coat and plated finishes. Custom finishes are available on special order. A sample and approval is required.

Waterborne acrylic and polyester powder coat will withstand 100 hours of salt spray (ANSI requires 25 hours).

Specify BHMA Designation	Description
600[1]	Prime Coat
605[2]	Bright Brass
606[2]	Satin Brass
611[2]	Bright Bronze
612[2]	Satin Bronze
613E	Dark Oxidized Satin Bronze - Equivalent
619[2]	Satin Nickel
625[2]	Bright Chrome
626[2]	Satin Chrome

Specify BHMA Designation	Description	Complements the following finishes
689	Aluminum	628, 625, 629, 630, 651, 652
690	Statuary Bronze	640, 613
691	Dull Bronze	612, 637, 639
693	Black	315
694	Medium Amber	313
696	Gold	605, 606, 632, 633
BSP	Black Suede Powder	
WSP	White Suede Powder	

1 600 is a special rust-inhibiting prime coat. Closers can be ordered prime coat only (specify closer x 600). An additional charge applies if finish coat is required over prime coat.

2 Plated finish

- Closer bodies and plastic covers are available in waterborne acrylic finishes. Arms and metal covers are available in powder coat or plated finishes.
- When a plated finish is ordered, arm and cover will be plated unless "cover only" is specified.

7500 SERIES
INSTITUTIONAL DOOR CLOSER

HOW TO ORDER

NOTE: For optimum protection of door and frame assemblies, always use auxiliary wall, floor, or overhead door stop.

J L — **Prefixes**

No Prefix } 7500 series designates Tri-Style® packaging (tri-packed for regular, top jamb or parallel mounting)

- **S** - Regular arm application only, Non-Hold Open
- **JS** - Top Jamb application only (3" maximum reveal), Non-Hold Open
- **P** - 7500 Parallel arm application only, Non-Hold Open 7580 low profile closer 7500SS corrosion resistant closer
- **J** - Top jamb installation. Supplied with 7786 backplate 2-3/4" - 7" reveal, 150° swing
- **JL** - Top jamb Installation. Supplied with 7786 back plate 2-3/4" - 7" reveal, 180° swing
- **PR** - Parallel rigid arm (parallel arm only); specify hand for hold open functions
- **PRO** - Parallel rigid arm with offset soffit plate (parallel arm only); specify hand for hold open applications
- **PS** - 7500ST / 7540ST for push side mounting only
- **R** - Rigid heavy-duty regular arm (Torx® screws not included) (N/A in stainless steel or hold open)
- **CLP** - CloserPlus® arm (parallel arm only)
- **CPS** - CloserPlus Spring™ arm (parallel arm only)
- **UNI** - Unitrol® arm (parallel arm only - specify door width) Frame reveals 1-7/8" to 4-5/8" (48-117mm) standard
- **UNIJ** - Unitrol arm (top jamb only - specify frame reveal) 7-3/8" (187mm) maximum

75 — **First & Second Digit**
Defines closer series

0 — **Third Digit**
Specifies some options

- **0** - Specifies standard arm
- **3** - Indicates top jamb (J prefix) for frame reveal 0 to 3" (0-76mm) 7786 back plate included.
- **4** - Specifies shallow 11/16" (17mm) depth slide track for closer with "ST" suffix. (ST-DE is not available)
- **7** - Specifies closer having a security arm, security cover and Torx® security screws (specify hand)
- **8** - Specifies low-profile arm (use prefix "P" parallel arm or "J" for top jamb) Non-hold open only

0 — **Fourth Digit**
Specifies closer size

- **0** – Adjustable 1-6

H — **Suffixes**

- **None** - Non-hold open arm function
- **H** - Hold open arm function (specify hand when "PR" prefix is ordered)
- **M** - Metal cover (cover is handed for top jamb applications)
- **MLL** - Lead lined metal cover
- **DA** - Optional delayed action feature
- **EBC** - Optional enhanced backcheck
- **ST** - Slide track - single lever arm (auxiliary stop recommended). For push side - prefix PS
- **ST-180** - Slide track - single lever arm, **pull side** track without buffer assembly for maximum door swing (auxiliary stop required)
- **ST-DE** - Slide track - pull side double egress
- **SS** - Corrosion resistant closer. Available with non-hold open adjustable arm only; for regular arm, top jamb "J" prefix or parallel arm "P" prefix
- **T** - Thumbturn hold open on CloserPlus® (CLP) or CloserPlus Spring™ (CPS) arm
- **R** - Ramp hold open on CloserPlus® (CLP) arm
- **G** - ABS cover
- **EP** - Extra Power (specify 7706EP and arm (RA, PA, or TJ) when ordering)
- **STP** - Slide Track Pocket Door (specify 7706EPSTP)
- **DLP** - Double Lever Pocket Door (specify 7706EPDLP)

NOTE:

- Before installing a door closer, verify the accessibility, fire, and life-safety requirements that are in effect. This includes the mounting height and projection into the clear opening. Check the adopted state and local building codes and consult the Authority Having Jurisdiction (AHJ)
- To maintain the warranty and ensure proper operation of the product, follow the installation instructions & templates and install on the inside of the building.
- Consult NFPA 80 for the hinge requirements on a fire door.
- Failure to use fasteners supplied with closer may void factory warranty.
- Optional fasteners are available for a variety of applications. Consult the door and frame manufacturer to ensure the proper fasteners are used to maintain certifications.
- Sizing charts are based on 1-3/4" x 7' standard weight doors swinging to 110°. Other application conditions (e.g. larger door heights or weight) may require larger size closer. Adjusting the spring power to meet the low opening force requirements of the Americans With Disabilities Act or ANSI/BHMA Standard A117.1, may not provide adequate closing power to dependably close and latch the door in some conditions (i.e. air movement from wind gusts or building stack pressure).

NORTON RIXSON

ASSA ABLOY

7570 SERIES
SECURITY DOOR CLOSER

INTRODUCTION

7570 Series are high security closers designed to withstand maximum abuse, deter tampering and help protect doors, walls and hardware. Available with a large number of arm and track assemblies, the 7570 Series closers are capable of providing a high level of reliable performance for a wide variety of openings. Schools, government buildings, financial institutions, industrial facilities, and prisons and detention centers are ideal applications for this closer.

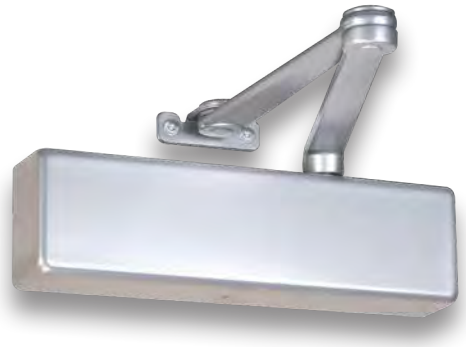

FEATURES

- Adjustable spring sizes 1 through 6
- Security arms – joints feature permanent, orbital riveted elbow and arm shoe/soffit plate joints which prevent disassembly
- Adjustable backcheck cushioning and positioning
- Torx drive machine screws with security pin
- Heavy-duty arms: Regular Rigid, Parallel Rigid, CloserPlus® and CloserPlus Spring™
- Slide track – push or pull mounting
- 30-year limited warranty

OPTIONAL FEATURES

- Delayed action
- Enhanced backcheck

NORTON RIXSON

ASSA ABLOY

7570 SERIES
SECURITY DOOR CLOSER

OVERVIEW

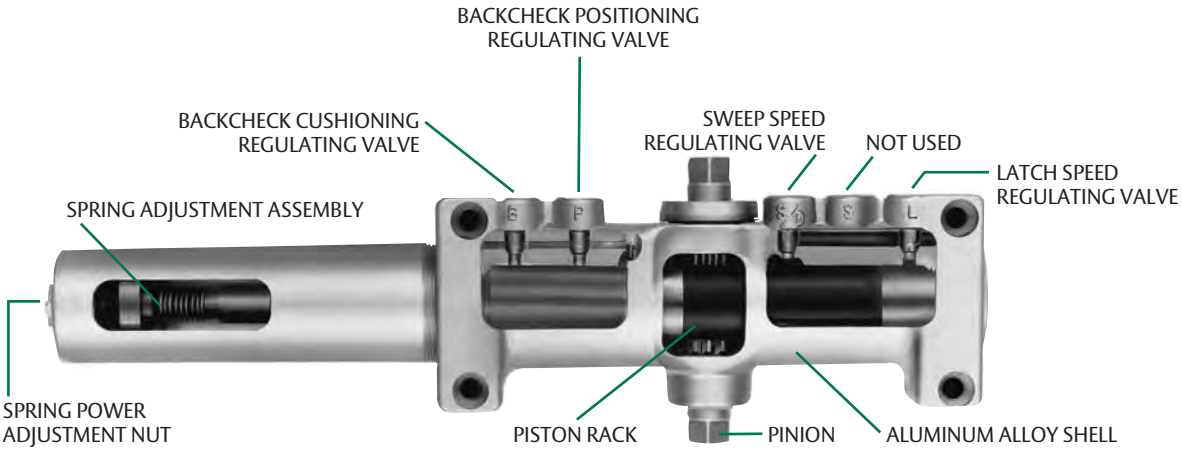

CERTIFICATIONS

- ANSI/BHMA A156.4, Grade 1 certified
- UL / cUL listed for use on fire rated doors
- UL10C listed for positive pressure fire test
- Comply with requirements for the Americans with Disabilities Act (A.D.A) and ANSI standard A117.1
- This product is manufactured in an ISO 9001, ISO 14001 facility
- Closers are listed by the New York City Materials and Equipment Acceptance Division

CAUTION: Door Closers for Low Opening Force Applications:
Door closers installed in openings required to meet the requirements of the Americans With Disabilities Act or ANSI/BHMA Standard A117.1, when adjusted to meet those requirements, may not provide adequate closing power to dependably close and latch the door based on opening or site conditions.

EXPLANATION OF FEATURES

Aluminum Alloy Housing
Closer bodies are constructed of a special aluminum alloy, carefully selected to accommodate interactive steel components and operating conditions.

Rack & Pinion Operation
Provides a smooth constant control of the door through its full opening and closing cycle. 180° door swing can be achieved when door, frame, hardware and arm function do not interfere.

Handed
All series 7570 closer covers are handed (closer cover must match hand of door).

Sweep Speed Control Valve
Allows adjustment of door speed from the door's full open position down to approximately 5° from the closed position.

Latch Speed Control Valve
Allows adjustment of door speed from approximately 5° down to the door's fully closed position.

Non-Critical Control Valves
All control valves for sweep speed, latch speed and backcheck cushioning are non-critical and are adjusted by a standard 1/8" (3mm) hex wrench.

Adjustable Backcheck Cushion Valve
Provides control of the door in the opening cycle, beginning at approximately 75° of door opening. It slows/cushions the door opening, when the door is forcibly opened beyond its pre-adjusted limits.

Adjustable Backcheck Position Valve
Allows the door opening position, where backcheck cushioning begins, to be adjusted to a greater door angle, up to a maximum of 20° farther (approximately 95°).

Security Cover
Supplied standard with all series 7570 door closers. This deep drawn steel cover is handed for all applications. The cover is fastened to the closer body at two points on top and to the door closer body stand-offs at two points on the bottom.

Warranty
These closers carry a limited 30-year warranty against defect, and life of the building on the aluminum housing.

Closer Fluid
NorGlide® closer fluid is a specially formulated multi-viscosity hydraulic fluid that contains lubricity and anti-oxidation agents that provide optimum performance and efficiency. This fluid complements the interaction of the door closer's aluminum housing with its steel and brass components, while maintaining stable viscosity to allow the door closer to perform in temperatures ranging from extremely high to as low as -40° F.

DOOR CLOSER POWER OPTIONS

Series 7570 Multi-Sized Door Closer
Adjustable through the entire power range of door closer sizes 1 through 6, as outlined in ANSI/BHMA standard A156.4. Option PT-4H.

The series 7570 also conforms to the minimum opening force requirements of the Americans with Disabilities Act (A.D.A.) and ANSI/BHMA standard A117.1 for interior doors.

NORTON RIXSON

ASSA ABLOY

7570 SERIES
SECURITY DOOR CLOSER

OPTIONAL FEATURES

Adjustable Delayed Action Closing

An optional hydraulic feature that adds a third speed range to the closing cycle. This feature becomes effective when the door is opened and released at any point beyond 70°. The amount of time delay depends upon the combination of the angle of door release and valve adjustment. The valve can be adjusted with a 1/8" (3mm) hex key from no delay time up to maximum delay times of:

Door Opened and Released at	Approximate Time of Delay Cycle
180°	4-5 minutes
120°	2-3 minutes
90°	25-30 seconds

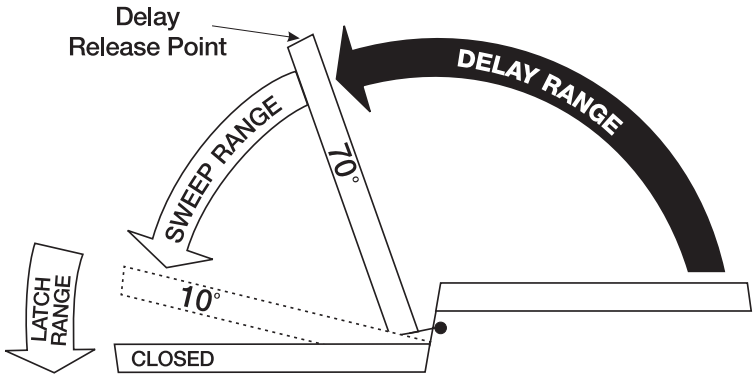

Pressure Relief Safety Valve

The delayed action hydraulic system contains a pressure relief valve. Any time the door is forced toward the closed direction while it is in the closing cycle, the valve will open and permit the door to close. This prevents damage to door, frame and closer.

Suggested Applications

Delayed Action closing allows slow-moving traffic to clear the opening before the door closer's normal closing cycle begins. This feature can be helpful in health care facilities such as hospitals and nursing homes. It provides sufficient time for persons on crutches or in wheelchairs to pass through a door without concern of it closing. At the same time, it can accommodate the facility's staff with movement of food service carts, beds, and other wheeled traffic.

Use of delayed action closers on many doors throughout industrial and commercial buildings can also assist the flow of traffic. Locations where additional time to clear the opening is advantageous are doors between office and factory/warehouse facilities, doors to workshops or laboratories, to kitchen and food processing areas.

Non-Hold Open

Self-closes door every time door is opened. Auxiliary stop (by others) required except when using the CloserPlus®, CloserPlus Spring™ or Unitrol® arms.

Hold Open

Achieved by means of ball and detent/roller. Ball and detent or roller hold open is effective in a range of 85° to 110°.

Hold open arm door closers are not permitted to be used on fire door assemblies.

Arm Function	Regular Rigid Arm	Parallel Rigid Arm	CloserPlus® Parallel Arm	CloserPlus Spring™ Parallel Arm	Unitrol® Parallel Arm	Slide Track
Non-Hold Open	✓	✓	85° to 110°	85° to 110°	85° to 110°	85° to 110°/180°
Hold Open	—	—	85° to 110°	85° to 110°	—	—

✓=180° trim and template permitting

SPECIFICATIONS

7570 Series

Closers for interior and exterior doors shall be full rack-and-pinion type with cast aluminum alloy body. Closers shall be surface mounted and shall project no more that 2-3/16" from the surface of the door. Closers shall be reversible but supplied with a handed metal cover. Closer fluid shall contain lubricity and anti-oxidation agents. Closer fluid shall maintain stable viscosity to allow door closer to perform in temperatures ranging from extremely high to as low as -40°F. Closers shall have multi-size spring power adjustment to permit setting of spring from 1 through 6. Closers shall have two non-critical valves, hex key adjusted, to independently regulate sweep and latch speed. Closers shall have backcheck cushioning controlled by a hex key adjustable valve. Closers shall have backcheck position controlled by a hex key adjustable valve.

[Closers shall have adjustable delayed-action closing controlled by a hex key adjustable valve.]

**Closers shall be enclosed in a [plated] [sprayed] metal cover. Closers to be Norton Rixson [7570]. Covers shall be fastened to the body at four points, two at the top and two at the bottom to prevent prying.

**For special arms insert the appropriate specification from column two on this page.

****Unitrol® Arm**

Door closers shall have built-in door stop effective at one point selected at installation, from 85° - 110° in five-degree increments. Door stop shall be cushioned by a shock-absorbing heavy-duty spring action effective at the soffit plate pivot. Closers shall be provided for parallel arm installation using rigid steel main arm and secondary arm lengths proportional to the door width.

****CloserPlus® Arm**

Door closers shall have built-in door stop [and holder] effective at one point selected at installation, from 85° - 110° in five-degree increments. Door stop mechanism shall be reversible and attached to soffit plate. [Hold open mechanism shall have engage/disengage selection actuated by thumbturn]. Closers shall be provided for parallel arm installation using rigid steel main and secondary arms.

****CloserPlus Spring™ Arm**

Door closers shall have built in door stop [and holder] effective at one point selected at installation, from 85° - 110° in five-degree increments. Door stop mechanism shall have a buffer spring that engages prior to the dead stop feature, reducing shock loads to the door and frame assembly. Door stop mechanism shall be reversible and attached to soffit plate. [Hold open mechanism shall have engage/disengage selection actuated by thumbturn]. Closers shall be provided for parallel installation using rigid steel main and secondary arms.

7570 SERIES
SECURITY DOOR CLOSER

APPLICATIONS



Regular Rigid Arm

This double lever arm features a non-adjustable secondary arm. Orbitally riveted joints prevent tampering or disassembly. The rigid heavy-duty arm is standard with the security closers featuring a regular arm applicaton.

Auxiliary door stop required. Available non-hold open only.



Parallel Rigid Arm

An enhanced variation of the standard parallel arm assembly that is intended for use in heavy traffic areas where auxiliary door stops are installed.

Auxiliary door stop required. Available non-hold open only.



CloserPlus® Arm

Similar to the Parallel Rigid arm, this arm incorporates a stop at the arm's soffit plate to dead stop the door at a predetermined degree of door swing between 85° and 110°, in 5° increments. Prior to dead stop the door closer's backcheck feature slows the door speed to reduce the impact of the stop action.

CloserPlus arm is intended for use where an auxiliary door stop cannot be utilized and no more than moderate abuse is anticipated. Where more extreme conditions are expected, use of a Unitrol® arm is recommended.

Thumbturn hold open available. (Hold open strength is adjustable.)

APPLICATIONS



CloserPlus Spring™ Arm

This heavy-duty stop arm includes all of the features of the CloserPlus Arm, plus an added buffer spring that is compressed prior to the arm hitting the dead stop point. This greatly reduces the shock of the stopping action that occurs with the CloserPlus arm.

CloserPlus Spring Arm is intended for use where an auxiliary door stop cannot be utilized and no more than moderate abuse is anticipated. Where more extreme conditions are expected, use of a Unitrol arm is recommended.

Thumbturn hold open available. (Hold open strength is adjustable.)



Unitrol® Arm (Parallel Arm)

Unitrol arms combine the features of a double lever arm overhead door stop/holder with the backcheck feature of the door closer to reduce door stopping shock loads to a minimum. This arm uses a compression spring buffer at thesoffit plate/arm shoe that will absorb 30 lbs. of force, 5° prior to the door's dead stop. Coupled with the door closer's backcheck feature, the Unitrol Arm offers the most controlled stop available with a surface door closer.

There are three different length arm assemblies. Each length is designed for a specific range of door widths to provide precise door control. This further lessens the dead stop impact on the door's hinges/pivots.

Only available in painted finishes.



Pull Side

Slide Track Mounting

Whether pull or push side mounted, this application provides the designer with the smoothest lines available in a surface-mounted door closer. The single lever arm allows components to be located in a stack configuration to minimize projection and eliminate obtrusive arm angles.



Push Side

Auxiliary door stop is recommended for this application.

NORTON RIXSON

ASSA ABLOY

7570 SERIES
SECURITY DOOR CLOSER

REGULAR RIGID ARM

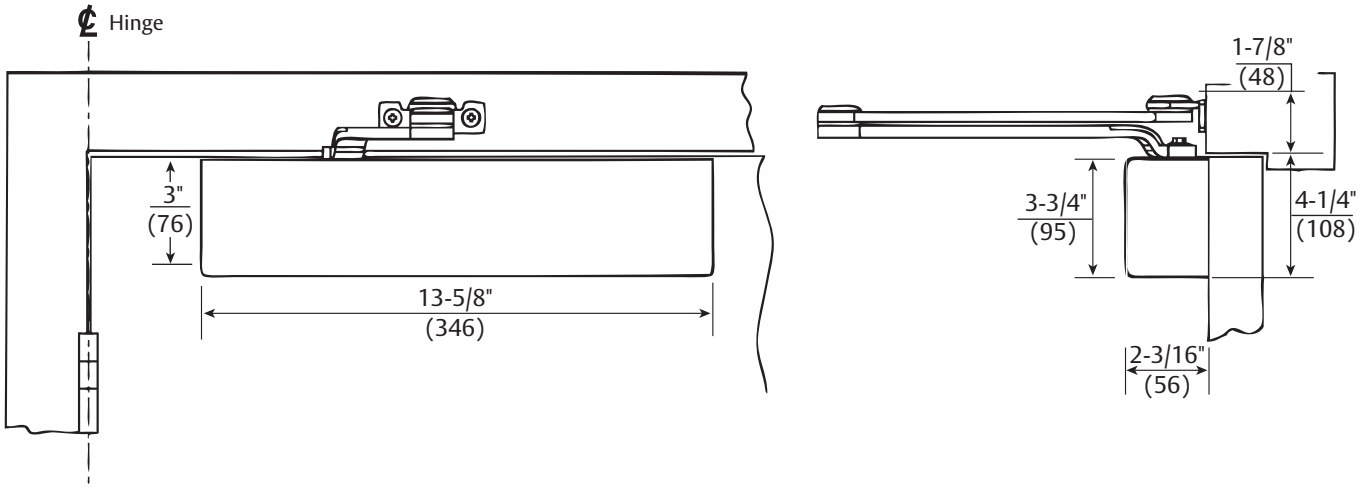

Mounting holes for closer body are spaced 2-3/8" (60mm) vertically x 6-3/4" (171mm) horizontally.

Maximum Door Width Inches (cm)		Model Number
Interior	Exterior	Non-Hold Open
36" (91)	30" (76)	7570
42" (107)	36" (91)	
46" (117)	42" (107)	
54" (137)	48" (122)	
—	52" (132)	

Note:

- 7570 door closers are set at midpower range from the factory and can be adjusted for door sizes noted above.

PARALLEL RIGID ARM

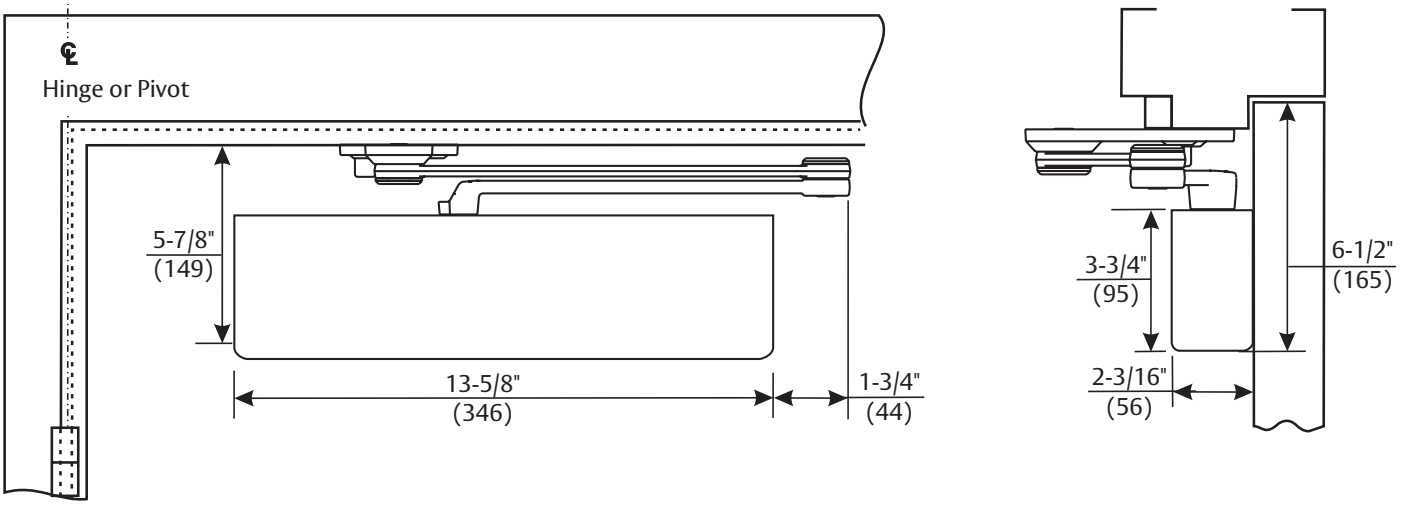

Mounting holes for closer body are spaced 2-3/8" (60mm) vertically x 6-3/4" (171mm) horizontally.

Maximum Door Width Inches (cm)		Model Number
Interior	Exterior	Non-Hold Open
30" (76)	—	PR7570
36" (91)	32" (81)	
42" (107)	36" (91)	
48" (122)	42" (107)	
—	48" (122)	

Note:

- 7570 door closers are set at midpower range from the factory and can be adjusted for door sizes noted above.

NORTON RIXSON

ASSA ABLOY

7570 SERIES
SECURITY DOOR CLOSER

CLOSERPLUS® ARM

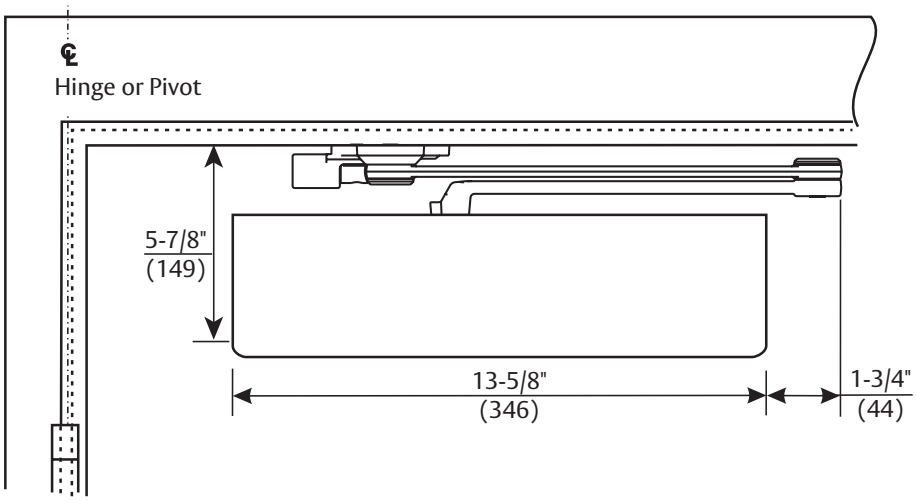

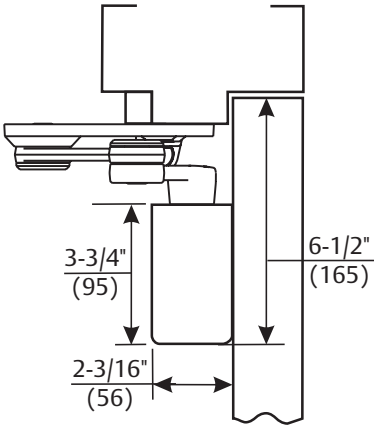

Mounting holes for closer body are spaced 2-3/8" (60mm) vertically x 6-3/4" (171mm) horizontally.

Maximum Door Width Inches (cm)		Model Number	
Interior	Exterior	Non-Hold Open	Hold Open
30" (76)	—	CLP7570	CLP7570T
36" (91)	32" (81)		
42" (107)	36" (91)		
48" (122)	42" (107)		
—	48" (122)		

Note:

- 7570 door closers are set at midpower range from the factory and can be adjusted for door sizes noted above.

NORTON RIXSON

ASSA ABLOY

7570 SERIES
SECURITY DOOR CLOSER

CLOSERPLUS SPRING™ ARM

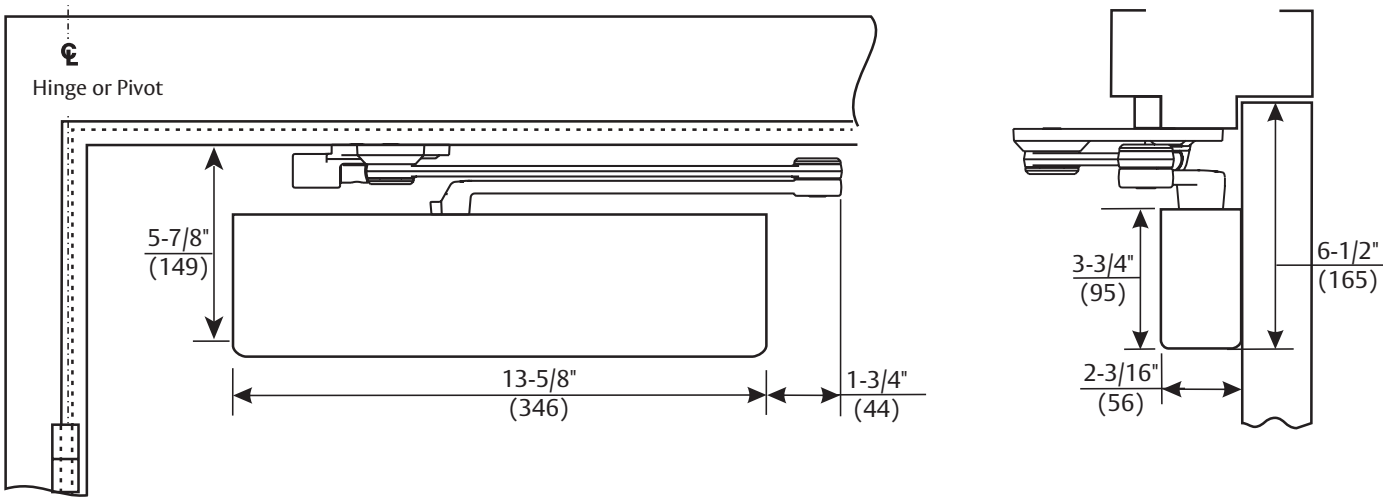

Mounting holes for closer body are spaced 2-3/8" (60mm) vertically x 6-3/4" (171mm) horizontally.

Maximum Door Width Inches (cm)		Model Number	
Interior	Exterior	Non-Hold Open	Thumbturn Hold Open
30" (76)	—	CPS7570	CPS7570T
36" (91)	32" (81)		
42" (107)	36" (91)		
48" (122)	42" (107)		
—	48" (122)		

Note:

- 7570 door closers are set at midpower range from the factory and can be adjusted for door sizes noted above.

7570 SERIES
SECURITY DOOR CLOSER

UNITROL® PARALLEL ARM

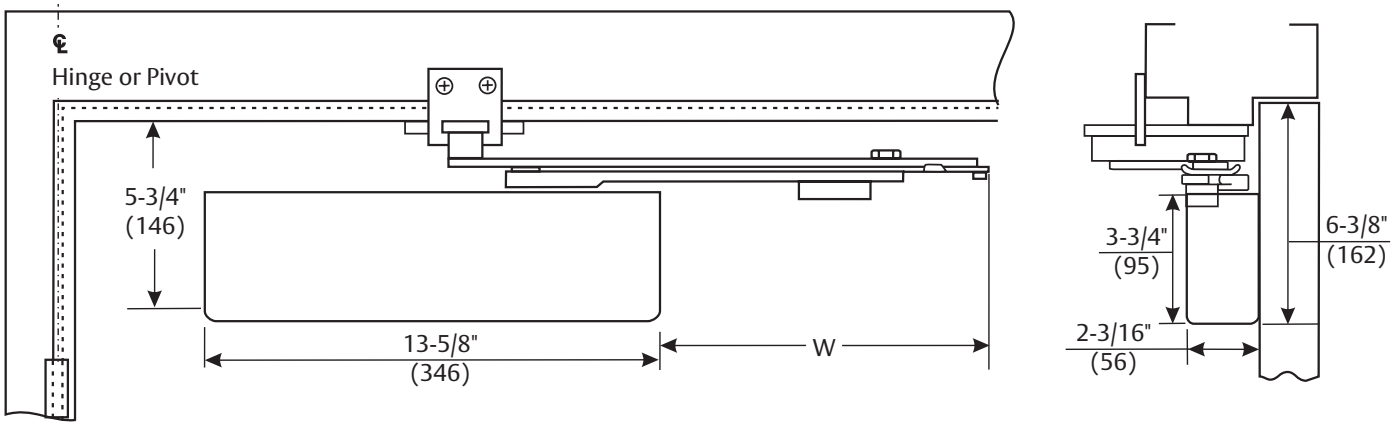

Door width must be specified when ordering.
Mounting holes for closer body are spaced 2-3/8" (60mm) vertically x 6-3/4" (171mm) horizontally.

Use 6190* bracket for reveals 1-7/8" - 4-5/8" (48 to 117mm). Reveals in excess of 4-5/8" (117mm) requires use of 6191** reinforcing kit. Reveals to 1/8" (3mm) require use of a 2022** angle bracket.

* 6190 bracket is supplied standard with Unitrol arms.
** 6191 and 2022 must be specified in lieu of 6190 when required.

Door Width Inches (cm)	W Arm Extension Beyond Closer
28-32" (71-81)	8-5/8" (219)
33-41" (84-104)	10-1/8" (257)
42-48" (107-122)	11-1/2" (292)

Maximum Door Width Inches (cm)		Model Number
Interior	Exterior	Non-Hold Open
30" (76)	—	UNI7570
36" (91)	30" (76)	
42" (107)	36" (91)	
48" (122)	42" (107)	
—	48" (122)	

Note:

- 7570 door closers are set at midpower range from the factory and can be adjusted for door sizes noted above.

PULL SIDE SLIDE TRACK

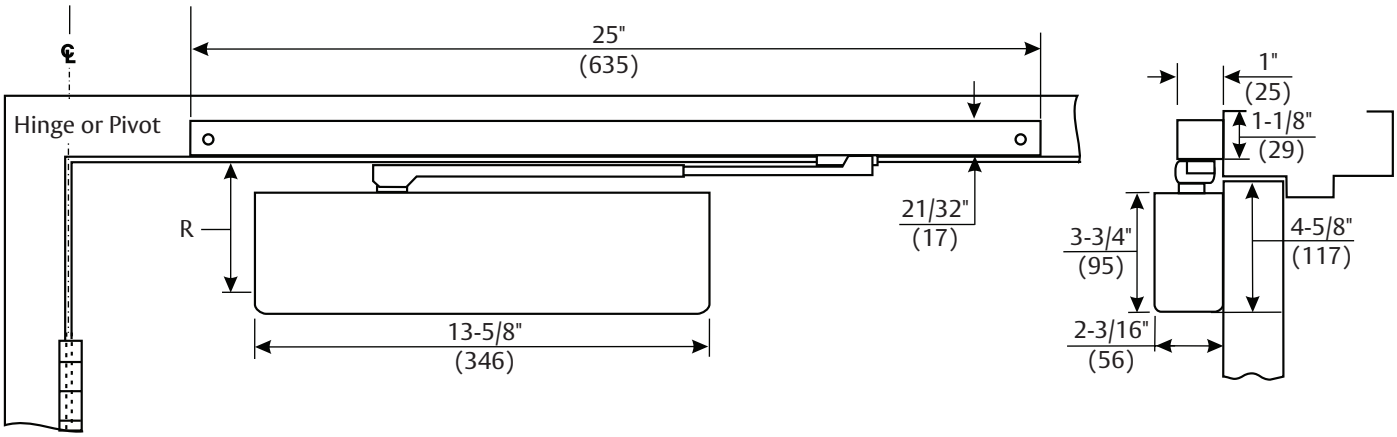

Mounting holes for closer body are spaced 2-3/8" (60mm) vertically x 6-3/4" (171mm) horizontally.

R Minimum Top Rail of Door with Frame Stop	
Without Drop Plate	**With 7786 Drop Plate**
3-1/2" (89mm)	2" (51mm)

Maximum Door Width Inches (cm)	Model Number
Interior	**Non-Hold Open**
32" (81)	7570ST
38" (97)	
48" (122)	

Notes:

- 7570 door closers are set at midpower range from the factory and can be adjusted for door sizes noted above.
- Door will swing up to 110° with buffer. Without buffer, door will swing to 180°. Auxiliary stop required for all applications.

NORTON RIXSON

ASSA ABLOY

7570 SERIES
SECURITY DOOR CLOSER

PUSH SIDE SLIDE TRACK

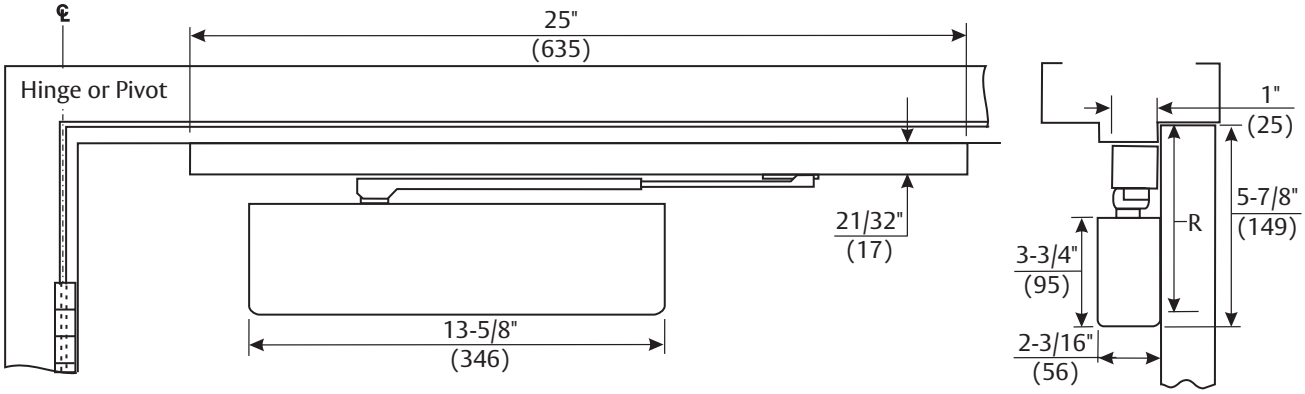

Mounting holes for closer body are spaced 2-3/8" (60mm) vertically x 6-3/4" (171mm) horizontally.

R Minimum Top Rail of Door with Frame Stop 5/8" (16mm)	
Without Drop Plate	**With 7788 Drop Plate**
5-1/4" (133mm)	3-5/8" (92mm)

Maximum Door Width Inches (cm)	Model Number
Interior	**Non-Hold Open**
32" (81)	PS7570ST
38" (97)	
48" (122)	

Notes:

- 7570 door closers are set at midpower range from the factory and can be adjusted for door sizes noted above.
- Maximum degree of door swing is 125°. Auxiliary stop required for all applications.

REGULAR RIGID ARM

Closer Mounting Plate

Narrow Top Rail - 7786 Drop Plate: For use where the narrow top rail of the door prevents the closer from being mounted directly to the door surface. This drop plate must be used for a closer mounted on a top rail between 1-7/8" and 3-3/8" (48 and 86mm) in height.

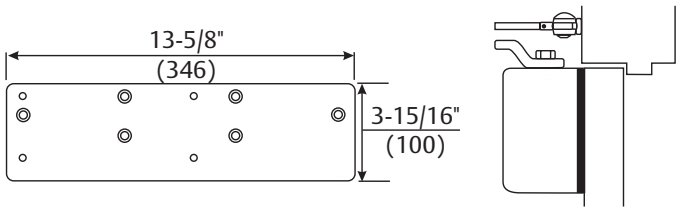

PARALLEL RIGID ARM

Closer Mounting Plate

Narrow Top Rail - 7788 Drop Plate: For use where a narrow top rail prevents the closer from being mounted directly to the door surface. This drop plate can be used to mount a closer on a top rail as narrow as 2-1/2" (64mm) in height.

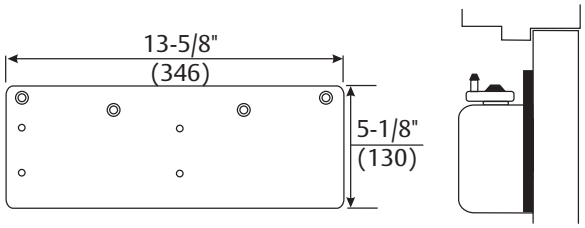

NORTON RIXSON

ASSA ABLOY

7570 SERIES
SECURITY DOOR CLOSER

PARALLEL RIGID ARM

Brackets for Non-Hold Open Arms

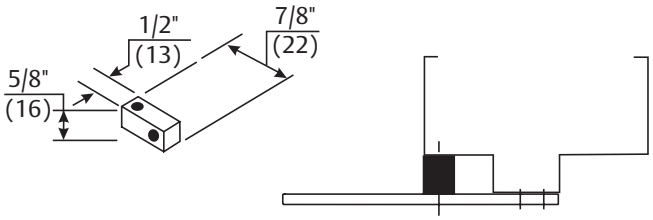

Standard - 2019S Spacer Block: For use where a narrow frame soffit does not provide adequate support for the soffit plate. Supplied as standard with all parallel rigid arm closers.

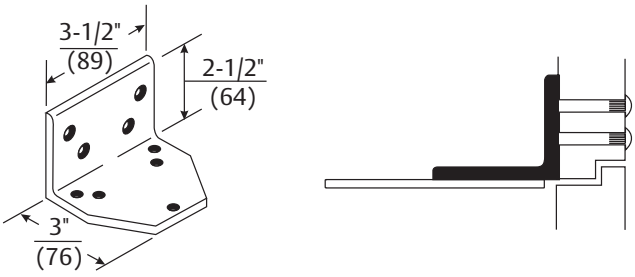

Flush Rabbeted Transom - 2019L Angle Bracket: For use where flush transom conditions prevent mounting of the standard soffit plate. This bracket is used in combination with the standard soffit plate.

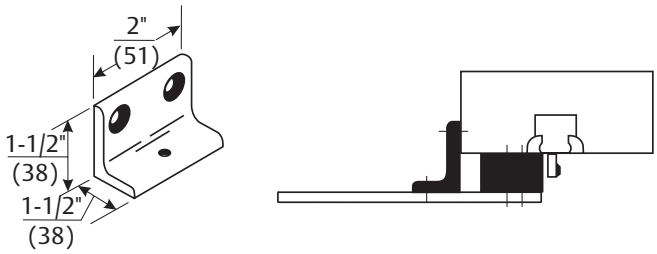

Narrow Frame - 6890 Support Bracket: For use where the frame is narrow, and the soffit plate cannot be mounted directly to the frame soffit or rabbet. Used in combination with the 6891 Spacer Block on blade stop frames to provide extra support and needed clearance of the blade stop.

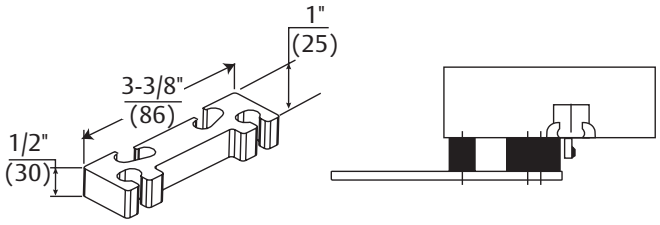

Clearance/Support Blade Stop - 6891 Spacer Block: For use where the door frame has a blade stop and the soffit plate must be mounted on the frame rabbet. This accessory is used in combination with the standard spacer block to provide clearance of the blade stop.

CLOSER PLUS® AND CLOSER PLUS SPRING™ ARMS

Closer Mounting Plate

Narrow Top Rail - 7788 Drop Plate: For use where a narrow top rail prevents the closer from being mounted directly to the door surface. This drop plate can be used to mount a closer on a top rail as narrow as 2-1/2" (64mm) in height.

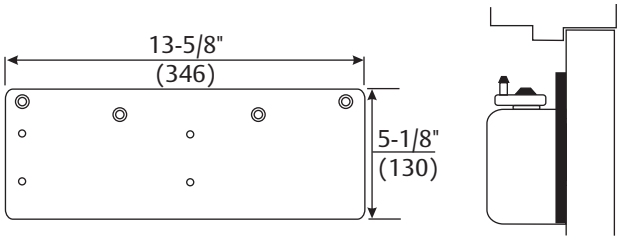

Brackets for Non-Hold Open Arms & Hold Open Arms

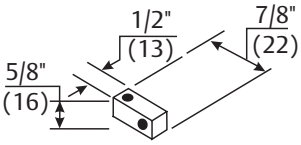

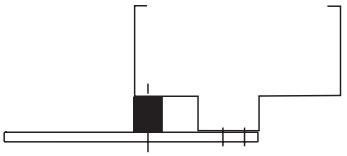

Standard - 2019S Spacer Block: For use where a narrow frame soffit does not provide adequate support for the soffit plate. Supplied standard with all parallel rigid arm closers.

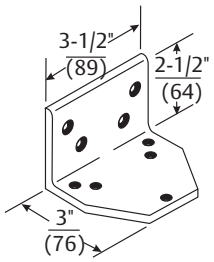

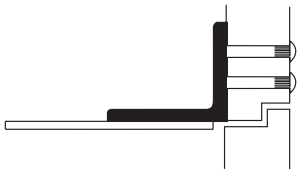

Flush Rabbeted Transom - 2019L Angle Bracket: For use where flush transom conditions prevent mounting of the standard soffit plate. This bracket is used in combination with the standard soffit plate.

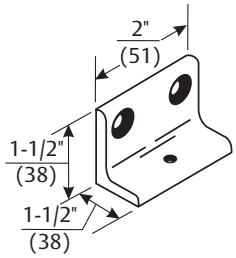

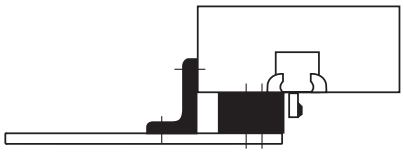

Narrow Frame - 6890 Support Bracket: For use where the frame is narrow, and the soffit plate cannot be mounted directly to the frame soffit or rabbet. Used in combination with the 6891 Spacer Block on blade stop frames to provide extra support and needed clearance of the blade stop.

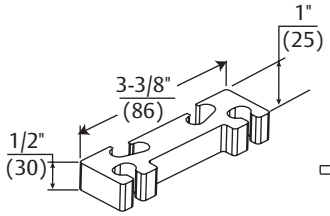

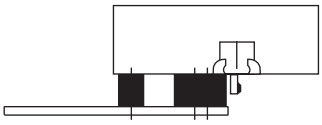

Clearance/Support Blade Stop - 6891 Spacer Block: For use where the door frame has a blade stop and the soffit plate must be mounted on the frame rabbet. This accessory is used in combination with the standard spacer block to provide clearance of the blade stop.

NORTON RIXSON

ASSA ABLOY

7570 SERIES
SECURITY DOOR CLOSER

UNITROL® ARM

Closer Mounting Plate

Narrow Top Rail - 7788 Drop Plate: For use where a narrow top rail prevents the closer from being mounted directly to the door surface. This drop plate can be used to mount a closer on a top rail as narrow as 2-3/8" (60mm) in height.

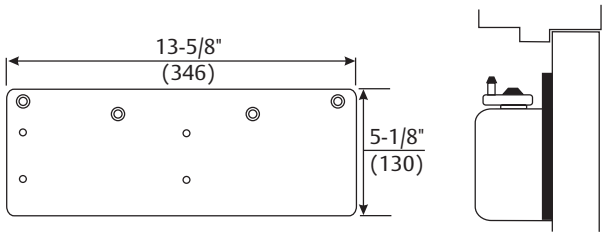

Soffit Plate Reinforcing Brackets

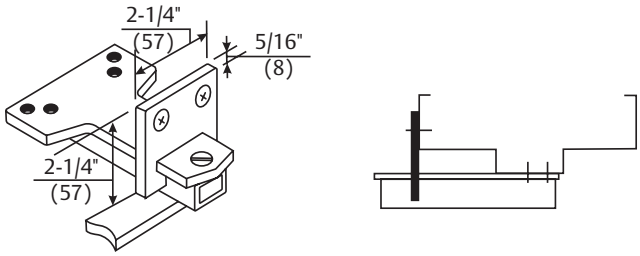

Additional Support - 6190 Reinforcing Bracket: Standard for use with all Parallel Arm Unitrol Door Controls. Provides additional support to the soffit plate on installations with door frame reveals from 1-7/8" to 4-5/8" (48 to 117mm).

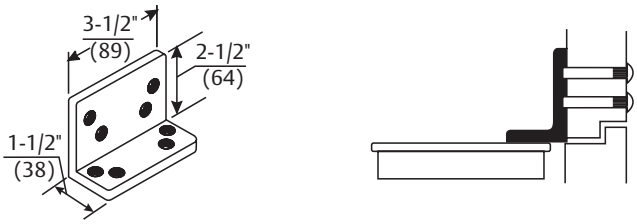

Flush Rabbeted Transom - 2022 Angle Bracket: Optional for use with all Parallel Arm Unitrol Door Controls. For use where rabbeted or flush transom conditions prevent installation of the soffit plate assembly. This bracket fastens to the overhead transom to provide a mounting surface for the soffit plate assembly.

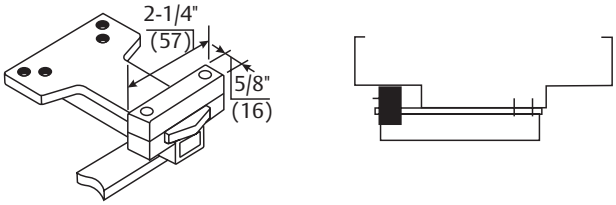

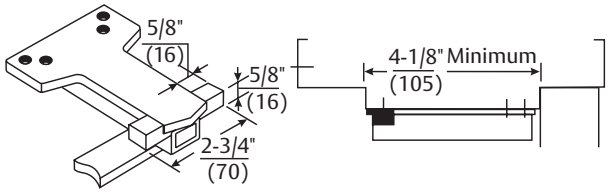

Wide Frame - 6191 Reinforcing Kit: Optional for use with all Parallel Arm Unitrol Door Controls. Used to support the soffit plate on installations with wide frames. Clamps may be used with or without the spacer block, depending on frame conditions.

BODY ASSEMBLIES, COVERS

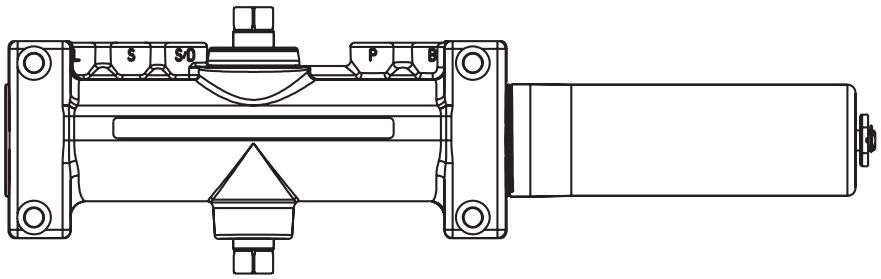

Closer Bodies	
Part Number	**Description**
7500LAP	Multi-Size Closer Body
7500DALAP	With Delayed Action

LAP = Less All Parts

Covers				
Part Number	**Mounting**	**Handing**	**Dimensions**	**Material**
7770MRR	Regular Arm	Right Hand	Length: 13-5/8" (346mm) Width: 3-3/4" (95mm) Projection: 2-3/16" (56mm)	Metal
7770MRL		Left Hand		
7770MPR	Parallel Arm	Right Hand		
7770MPL		Left Hand		

NORTON RIXSON

ASSA ABLOY

7570 SERIES
SECURITY DOOR CLOSER

REGULAR RIGID ARM

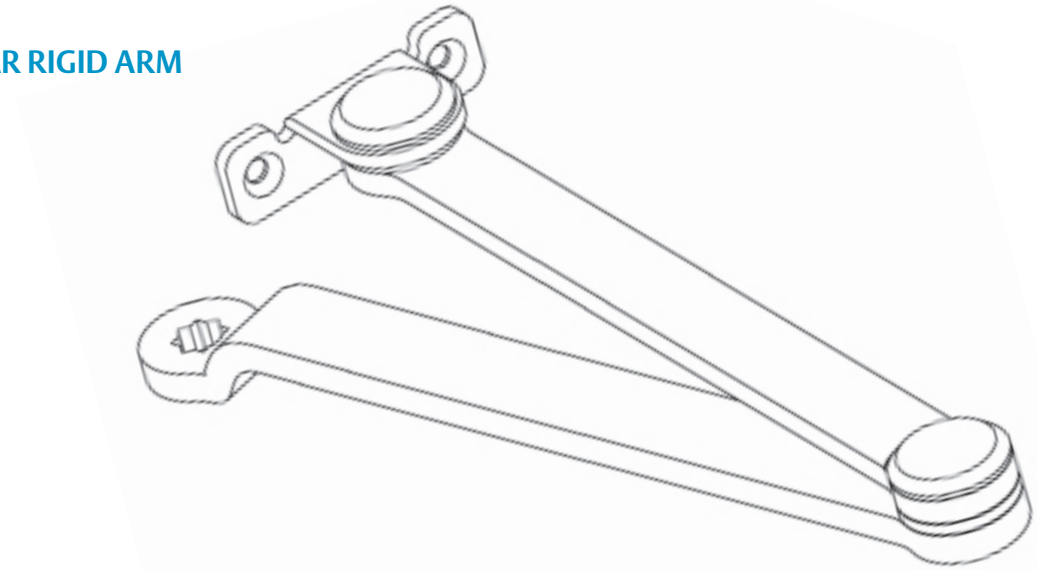

Note: Mounting hardware included with all parts orders.

Closer Series	Arm Function	Complete Arm Assembly
R7570	Non-Hold Open	7771-1

PARALLEL RIGID ARM

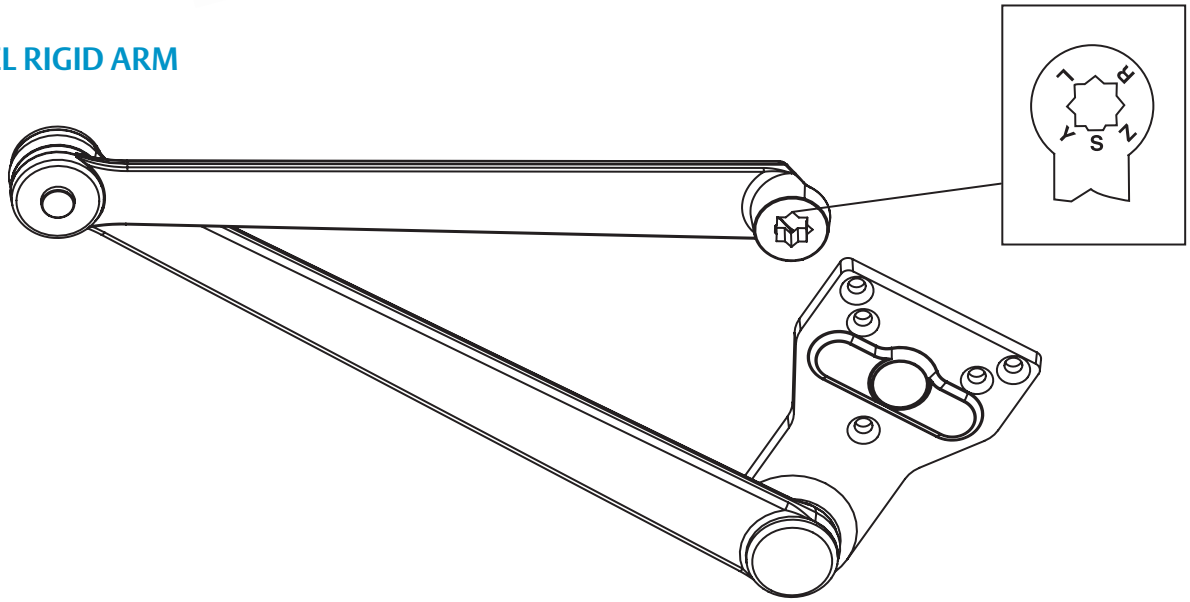

Note: Mounting hardware included with all parts orders.

Closer Series	Arm Function	Complete Arm Assembly
PR7570	Non-Hold Open	7771-5

CLOSERPLUS® ARM

Hold Open Arm Shown (CLP-T)

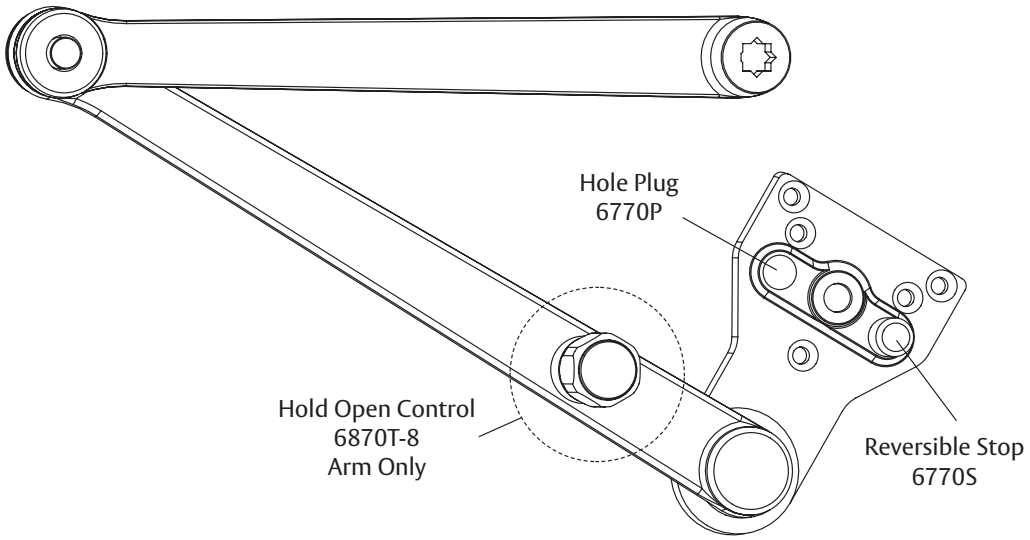

Note: Mounting hardware included with all parts orders.

Closer Series	Arm Function	Complete Arm Assembly
CLP7570	Non-Hold Open	CLP7771-5
CLP7570T	Thumbturn Hold Open	CLP7771-8T

CLOSERPLUS SPRING™ ARM

Non-Hold Open Arm Shown

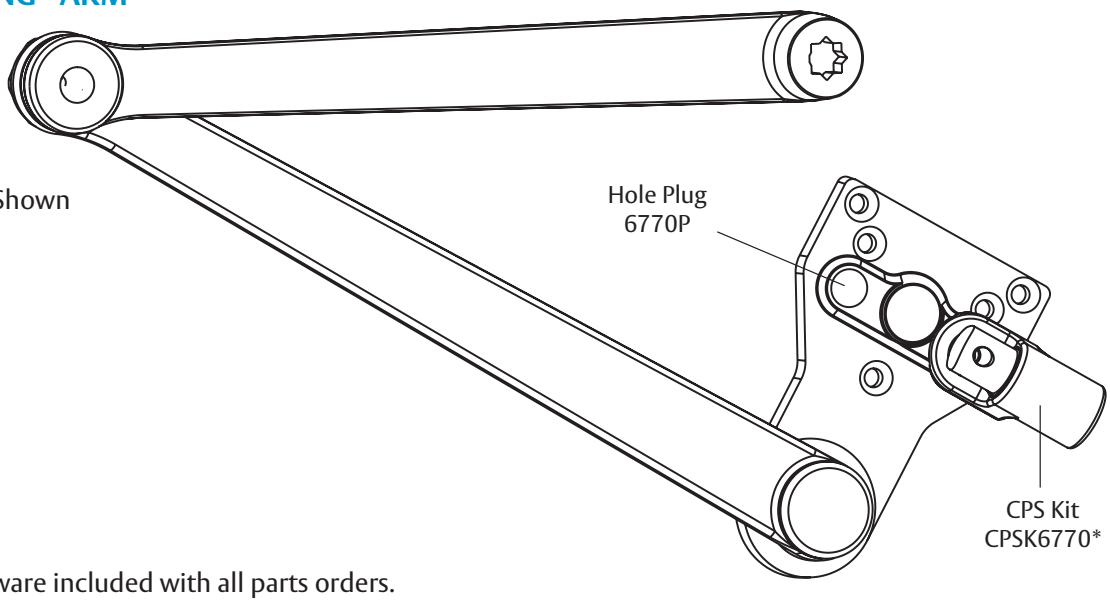

Note: Mounting hardware included with all parts orders.

Closer Series	Arm Function	Complete Arm Assembly
CPS7570	Non-Hold Open	CPS7771-5
CPS7570T	Thumbturn Hold Open	CPS7771-8T

* CPSK6770 Kit can be used to upgrade CLP7771-5 or CLP7771-8T arms.

NORTON RIXSON

ASSA ABLOY

7570 SERIES
SECURITY DOOR CLOSER

UNITROL® ARM

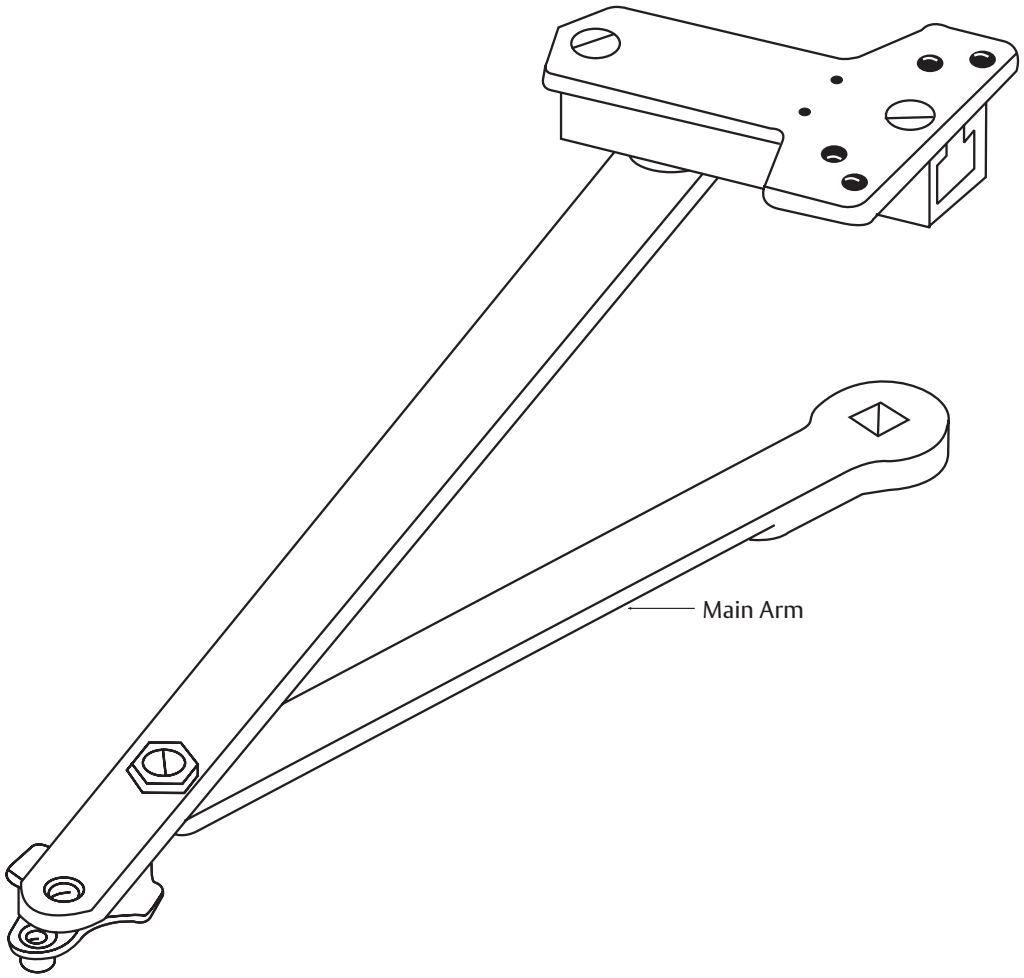

Note: Mounting hardware included with all parts orders.

Door Width (cm)	Main Arm Length* (mm)	Complete Arm Assembly
		Non-Hold Open
28" - 32" (71- 81)	9-1/2" (241)	6100-11
33"- 41" (84 - 104)	11" (279)	6100-13
42" - 48" (107 - 122)	12-1/2" (318)	6100-14

* Center to center length.
Only available in painted finishes.

TRACK ASSEMBLIES

Non-Hold Open Arm Shown

Non-Hold Open	
Model	**Slide Track Assembly**
Pull-side mounted	7771ST-1T
Push-side mounted	7771ST-5T

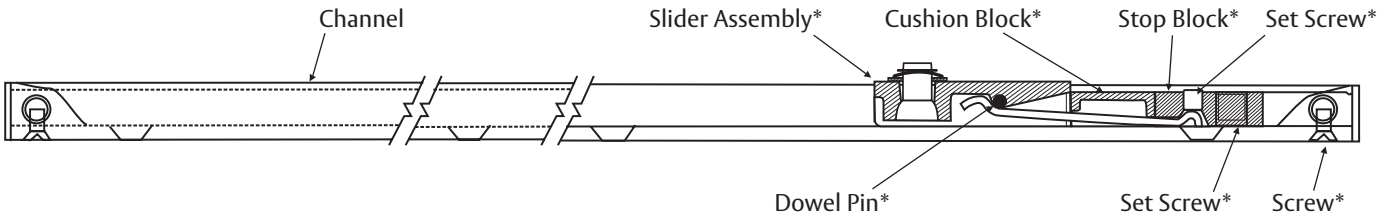

*Part of an Assembly Pack
Non-Hold Open = 7740SLD

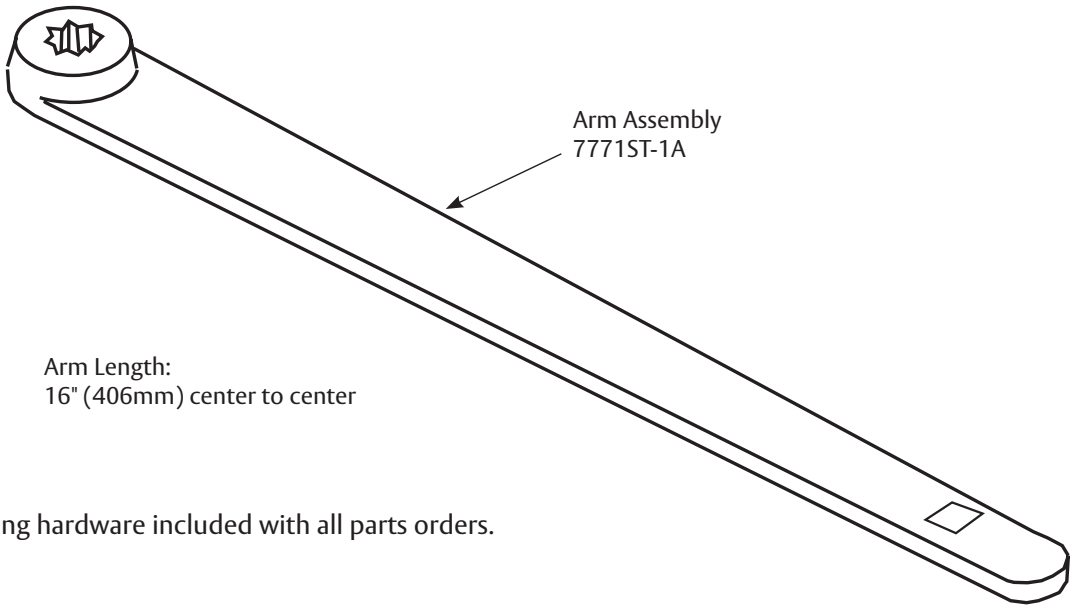

Arm Length:
16" (406mm) center to center

Note: Mounting hardware included with all parts orders.

NORTON RIXSON

ASSA ABLOY

7570 SERIES
SECURITY DOOR CLOSER

FASTENERS

Type	Description	Arm					
		RA	PR	CLP	CLS	UNI	ST
Torx®	Lobular *Torx* drive screws	S	S	S	S	S	S
SN	Sex Nut	O	O	O	O	S	S
SDST	Self Drilling Self Tapping	O	O	O	O	O	O

S = Standard; O = Optional

Torx drive screws, for tamper resistance are standard with 7570 closers. These screws are only offered with machine threads for fastening to metal doors and frames. #14-10 wood or sheet metal fasteners if required, must be supplied by others.

SN are for use on unreinforced hollow metal doors or to prevent any hollow metal door from collapse/dimpling. They can also be used for thru bolting on wood doors. **When selected as an add-on option,** SN are supplied for 1-3/4" (44mm) thick doors unless specified for 2-1/4" (57mm) thick doors.

Torx® Screw Pack^	
Arm Type	**Part Number**
Regular Rigid Heavy-Duty	RTX47
Parallel Rigid, CloserPlus® CloserPlus Spring™	PRTX47
Unitrol® Arm	UNITX47

^Torx screws with machine screw threads are supplied with security closers.

FINISHES

Norton Rixson offers waterborne acrylic, polyster powder coat and plated finishes. Custom finishes are available on special order. A sample and approval is required.

Waterborne acrylic and polyester powder coat will withstand 100 hours of salt spray (ANSI requires 25 hours).

Specify BHMA Designation	Description
600[1]	Prime Coat
605[2]	Bright Brass
606[2]	Satin Brass
611[2]	Bright Bronze
612[2]	Satin Bronze
613E	Dark Oxidized Satin Bronze - Equivalent
619[2]	Satin Nickel
625[2]	Bright Chrome
626[2]	Satin Chrome

Specify BHMA Designation	Description	Complements the following finishes
689	Aluminum	628, 625, 629, 630, 651, 652
690	Statuary Bronze	640, 613
691	Dull Bronze	612, 637, 639
693	Black	315
694	Medium Amber	313
696	Gold	605, 606, 632, 633
BSP	Black Suede Powder	
WSP	White Suede Powder	

1 600 is a special rust inhibiting prime coat. Closers can be ordered prime coat only (specify closer x 600). An additional charge applies if finish coat is required over prime coat.

2 Plated finishes.

- Closer bodies and plastic covers are available in waterborne acrylic finishes. Arms and metal covers are available in powder coat or plated finishes.
- When a plated finish is ordered, arm and cover will be plated unless "cover only" is specified.

NORTON RIXSON

ASSA ABLOY

7570 SERIES
SECURITY DOOR CLOSER

HOW TO ORDER

For optimum protection of door and frame assemblies, always use auxiliary wall, floor, or overhead door stop.

CLP — **Prefixes**

75 — **First & Second Digit**
Defines closer series

7 — **Third Digit**
Specifies some options

0 — **Fourth Digit**
Specifies closer size

T — **Suffixes**

Prefixes

- **No Prefix** – Regular Rigid arm
- **PR** – Parallel Rigid arm (parallel arm only). Non-hold open only.
- **PS** – 7570ST for push side mounting only.
- **CLP** – CloserPlus® arm (parallel arm only).
- **CPS** – CloserPlus Spring™ arm (parallel arm only).
- **UNI** – Unitrol® arm (parallel arm only - specify door width). Frame reveals 1-7/8" to 4-5/8" (48-117mm) standard.

Third Digit

- **7** – Specifies closer having a security arm, security cover and Torx® security screws (specify hand).

Fourth Digit

- **0** – Adjustable 1-6

Suffixes

- **None** – Non-hold open arm function
- **ST** – Slide track – single lever arm (auxiliary stop recommended)
- **T** – Thumbturn hold open on CloserPlus® (CLP) or CloserPlus Spring™ (CPS) arm
- **EBC** – Enhanced Backcheck
- **DA** – Delayed Action
- **EP** – Extra Power (specify model 7776EP)

NOTE:

- Before installing a door closer, verify the accessibility, fire, and life-safety requirements that are in effect. This includes the mounting height and projection into the clear opening. Check the adopted state and local building codes and consult the Authority Having Jurisdiction (AHJ)
- To maintain the warranty and ensure proper operation of the product, follow the installation instructions & templates and install on the inside of the building.
- Consult NFPA 80 for the hinge requirements on a fire door.
- Failure to use fasteners supplied with closer may void factory warranty.
- Optional fasteners are available for a variety of applications. Consult the door and frame manufacturer to ensure the proper fasteners are used to maintain certifications.
- Sizing charts are based on 1-3/4" x 7' standard weight doors swinging to 110°. Other application conditions (e.g. larger door heights or weight) may require larger size closer. Adjusting the spring power to meet the low opening force requirements of the Americans With Disabilities Act or ANSI/BHMA Standard A117.1, may not provide adequate closing power to dependably close and latch the door in some conditions (i.e. air movement from wind gusts or building stack pressure).or wind/draft conditions) may require adjustment of spring setting, selection of a larger size closer or different closer.

NORTON RIXSON

ASSA ABLOY

8000 SERIES
ARCHITECTURAL DOOR CLOSER

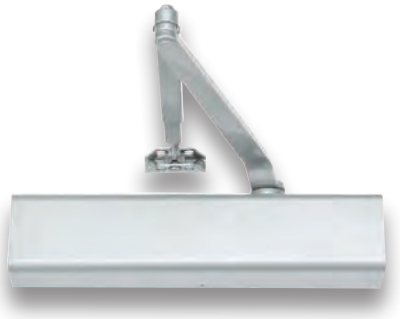

INTRODUCTION

Multi-sized surface closer offering a complete range of arms and a sleek, minimal design suited for moderate- to high-traffic, architectural openings.

FEATURES

- Exceeds 25 million cycles
- Adjustable spring sizes 1 through 6
- Tri-Style® packaging standard (regular arm, top jamb and parallel arm mounting)
- Non-handed
- Staked valves
- Cast aluminum closer body
- Rack and pinion design
- 1-1/4" (32mm) diameter piston
- 5/8" (16mm) diameter pinion journals
- 2-1/8" (54mm) projection (standard covers)
- All standard arm applications (with slim, full or metal covers) allow doors to swing 180 degrees, conditions permitting
- Full size template
- Standard, separate and independent, latch, sweep and back check intensity valves
- Application specific arms: Regular (S), Top Jamb (JS) and Parallel (P)
- Heavy-duty arms; Regular Rigid, Parallel Rigid, CloserPlus®, CloserPlus Spring™, Unitrol®
- Slide Tracks: push or pull side mounting
- 30-year limited warranty

OPTIONAL FEATURES

- Lead lined metal cover - suffix MLL
- Metal, architectural plastic or architectural metal covers (8501 only)
- Delayed action

Features	8301	8501
Slim Line Cover	✓	
Full cover		✓

NORTON RIXSON

ASSA ABLOY

8000 SERIES
ARCHITECTURAL DOOR CLOSER

OVERVIEW

CUTAWAY VIEW

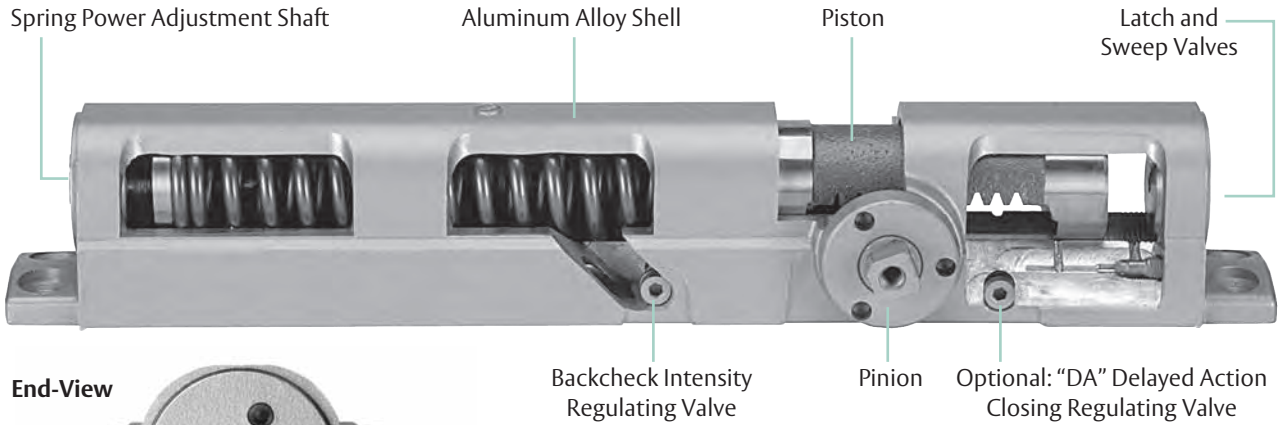

End-View

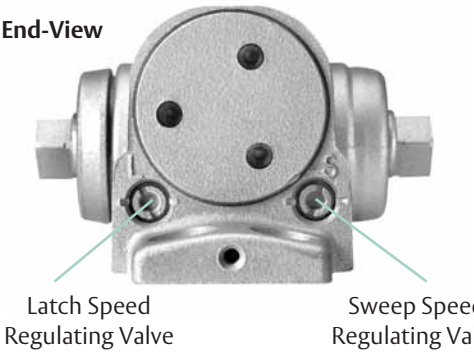

CERTIFICATIONS

- ANSI/BHMA A156.4, Grade 1 certified
- UL / cUL listed for use on fire rated doors
- UL10C listed for positive pressure fire test
- 8301 and 8501 door closers are designed to comply with requirements for the Americans with Disabilities Act (A.D.A)and ANSI standard A117.1
- This product is manufactured in an ISO 9001, ISO 14001 facility
- UL certified environmental product declaration

CAUTION: Door Closers for Low Opening Force Applications:
Door closers installed in openings required to meet the requirements of the Americans With Disabilities Act or ANSI/BHMA Standard A117.1, when adjusted to meet those requirements, may not provide adequate closing power to dependably close and latch the door based on opening or site conditions.

EXPLANATION OF FEATURES

Aluminum Alloy Housing

Closer bodies are constructed of a special aluminum alloy, carefully selected to accommodate interactive steel components and operating conditions.

Rack & Pinion Operation

Provides a smooth constant control of the door through its full opening and closing cycle. 180° door swing can be achieved when door, frame, hardware and arm function do not interfere.

Non-handed

With few exceptions all series 8301/ 8501 door closers are non-handed and can be installed on either right- or left-hand swing doors. Pinion shaft extends vertically through the closer body in both directions. Some options will require that the hand of the closer be specified.

Sweep Speed Control Valve

Allows adjustment of door speed from the door's full open position down to approximately 10° from the closed position.

Latch Speed Control Value

Allows adjustment of door speed from approximately 10° down to the door's fully closed position.

Tri-Style®

8301/8501 comes with screws, brackets and soffit plates to allow for regular, top jamb, and parallel arm installations.

Adjustable Backcheck Cushion Valve

Provides control of the door in the opening cycle, beginning at approximately 75° of door opening. It cushions the door opening when the door is forcibly opened beyond its pre-adjusted limits.

Standard Molded Covers

Molded of high-impact U.L. listed material. These covers are non-handed for all applications.

Warranty

Limited 30-year warranty for defects and life of the building on the aluminum housing.

Closer Fluid

NorGlide® closer fluid is a specially formulated multi-viscosity hydraulic fluid that contains lubricity and anti-oxidation agents that provide optimum performance and efficiency. This fluid complements the interaction of the door closer's aluminum housing with its steel and brass components, while maintaining stable viscosity to allow the door closer to perform in temperatures ranging from extremely high to as low as -40° F.

DOOR CLOSER POWER OPTIONS

Series 8301/8501 Multi-Sized Door Closer

Adjustable through the power range of sizes 1 through 6; as outlined in ANSI/ BHMA specification A156.4 option PT 4H.

Closers will also comply with the opening force requirements as outlined in the Americans with Disabilities Act (ADA) and ANSI/BHMA standard A117.1 for interior doors.

Optional Metal Cover

This steel cover is non-handed for regular and parallel arm applications, but is handed for top jamb applications. Cover is available in sprayed or plated finishes.



Optional Architectural Covers *

Plastic

Architectural plastic covers are molded of high-impact U.L. listed material. They are non-handed and available in sprayed finishes.

Metal

The architectural metal covers are steel and non-handed for all applications. These covers are available in sprayed or plated finishes.



Optional ABS Cover

Consult factory for details

NORTON RIXSON

ASSA ABLOY

8000 SERIES
ARCHITECTURAL DOOR CLOSER

EXPLANATION OF FEATURES

Adjustable Delayed Action Closing
An optional hydraulic feature that adds a third speed range to the closing cycle. This feature becomes effective when the door is opened and released at any point beyond 70°. The amount of time delay depends upon the combination of the angle of door release and valve adjustment. The valve can be adjusted with a 1/8" (3mm) hex key from no delay time up to maximum delay times of:

Door Opened and Released at	Approximate Time of Delay Cycle
180°	4-5 minutes
120°	2-3 minutes
90°	25-30 seconds

Pressure Relief Safety Valve
The delayed action hydraulic system contains a pressure relief valve. Any time the door is forced toward the closed direction while it is in the closing cycle, the valve will open and permit the door to close. This prevents damage to door, frame and closer.

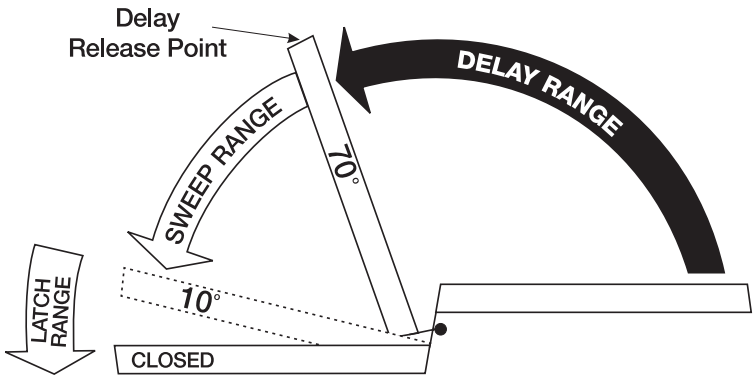

Suggested Applications
Delayed Action closing allows slow moving traffic to clear the opening before the door closer's normal closing cycle begins. This feature can be helpful in health care facilities such as hospitals and nursing homes. It provides sufficient time for persons on crutches or in wheelchairs to pass through a door without concern of it closing. At the same time, it can accommodate the facility's staff with movement of food service carts, beds, and other wheeled traffic.

Use of delayed action closers on many doors throughout industrial and commercial buildings can also assist the flow of traffic. Locations where additional time to clear the opening is advantageous are doors between office and factory/warehouse facilities, doors to workshops or laboratories, to kitchen and food processing areas, etc.

Non-Hold Open
Self-closes door every time door is opened. Auxiliary stop (by others) required except when using the CloserPlus®, CloserPlus Spring™ or Unitrol® arms.

Hold Open
Achieved by means of friction or ball and detent/ roller. Friction hold open has a range of 90° to 180° using template location and mechanical adjustment.

Ball and detent or roller hold open is effective in a range of 85° to 110°.

Hold open arm door closers are not permitted to be used on fire door assemblies.

Door Opening Degrees

Arm Function	Regular Top Jamb Parallel Arm	Parallel Rigid Arm	CloserPlus® Parallel Arm	CloserPlus Spring™ Parallel Arm	Unitrol® Parallel Arm	Unitrol® Top Jamb	Low Profile Regular, Parallel	Slide Track
Non-Hold Open	✓	✓	85° to 110°	85° to 110°	85° to 110°	85° to 110°	✓	85° to 110°/180°
Hold Open	90° to 180°	85° to 180°	85° to 110°	85° to 110°	85° to 180°	85° to 180°	N/A	85° to 110°

✓=180° trim and template permitting

SUGGESTED SPECIFICATIONS

8301/8501 Series

Closers for interior and exterior doors shall be full rack-and-pinion type with cast aluminum alloy shell. Closers shall be surface mounted and shall project no more than 2-1/8" from the surface of the door with standard cover. Closers shall be non-handed to permit installation on doors of either hand. Closer fluid shall contain lubricity and anti-oxidation agents. Closer fluid shall maintain stable viscosity to allow door closer to perform in temperatures ranging from extremely high to as low as -40°F. Closers shall have multi-size spring power adjustment to permit setting of spring from size 1 through size 6. Closers shall have two non-critical valves, hex key adjusted, to independently regulate sweep speed and latch speed. Closers shall have adjustable backcheck intensity controlled by a hex key adjusted valve.

[Closers shall have adjustable delayed action closing controlled by a hex key adjustable valve.]

Regular arm and top jamb closers shall have a non-hold open shoe permitting 15% (+ or – 7-1/2%) power adjustment. **Closers shall be enclosed in a [molded resin cover] [plated or sprayed metal cover], Closers to be Norton Rixson [8301/8501] [8501M] [8501MA] [8501A].

**For special arms insert the appropriate specification from column two on this page.

**Unitrol® Arm

Door closers shall have a fixed door stop feature effective at one point selected at installation, from 85° - 110° in five-degree increments.

Door stop shall be cushioned by a shock-absorbing heavy-duty spring action effective at the [soffit plate] [arm shoe] pivot. [Closers shall be provided for parallel arm installation using a rigid steel main arm and secondary arm lengths proportional to the door width.] [Closers shall be provided for top jamb installation using a forged steel, rigid main arm and telescoping secondary arm adequate for the frame reveal of the openings.]

**CloserPlus® Arm

Door closers shall have a field reversible door stop. Door closer shall have a feature with selectable on and off ball and detent hold open. Hold open tension shall be adjustable effective at one point selected at installation, from 85° - 110° in five degree increments. [Hold open mechanism shall have engage/disengage selection actuated by thumbturn]. Closers shall be provided for parallel arm installation using a forged rigid steel main arm and secondary arm.

**CloserPlus Spring™ Arm

Door closers shall have built-in door stop [and holder] effective at one point selected at installation, from 85° - 110° in five-degree increments. Door stop mechanism shall be reversible and have a buffer spring that engages prior to the dead stop feature, reducing shock loads to the door and frame assembly. Door stop mechanism shall be non-handed and attached to soffit plate. [Hold open mechanism shall have engage/disengage selection actuated by thumbturn]. Closers shall be provided for parallel installation using a forged rigid steel main arm and secondary arm.

NORTON RIXSON

ASSA ABLOY

8000 SERIES
ARCHITECTURAL DOOR CLOSER

APPLICATIONS

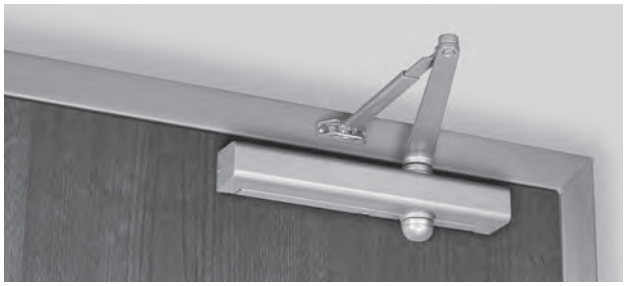

8301 - slim cover

Regular Arm
This is the only pull side application where a double lever arm is used. It is the most power-efficient application for a door closer. Sufficient frame, door and/or ceiling clearance must be considered.



8501 - full cover

Since the arm assembly projects directly out from the frame, this application may present an aesthetics issue or be prone to vandalism.



Top Jamb
For efficiency reasons this application provides the best alternative to the regular arm application. There must be sufficient frame face and/or ceiling clearance for this application. It requires a top rail on the door of just 2-1/4" (57mm). This application provides the best door control for doors in exterior walls that swing out of a building.



The entire door closer and arm assembly project from the frame, similar to the regular arm application, where matters of appearance and malicious abuse can be of concern. Consideration must be given to depth of frame reveal.



Parallel Arm
This application provides the most appealing design appearance for a surface mounted door closer having a double lever arm. This also makes it beneficial in vandalism-prone areas. It is on the push side of the door and the arm assembly extends almost parallel to the door. In the closed position, there is very little or no hardware projecting beyond the frame face in most situations.



Due to the geometry of the arm it is approximately 25% less power efficient than a regular arm application. The entire closer and arm assembly are mounted below the frame stop. Top rail clearance dimensions will vary based on the type of cover used.

APPLICATIONS



Non-hold open arm shown

Parallel Rigid Arm

An enhanced variation of the standard parallel arm assembly that is intended for use in heavy traffic areas where auxiliary door stops are installed.

Hold open available - specify hand when ordering.



Non-hold open arm shown

CloserPlus® Arm

Similar to the Parallel Rigid arm, this arm incorporates a stop at the arm's soffit plate to dead stop the door at a predetermined degree of door swing between 85° to 110°, in 5° increments. Prior to dead stop the door closer's backcheck feature slows the door speed to reduce the impact of the stop action.

The CloserPlus Arm is intended for use where an auxiliary door stop cannot be utilized and no more than moderate abuse is anticipated. Where more extreme conditions are expected, use of a Unitrol arm is recommended.

Available with or without hold open. (Hold open strength is adjustable.)



Non-hold open arm shown

CloserPlus Spring™

This arm has all the characteristics of the CloserPlus arm with an additional steel buffer spring that provides greater protection at the end of the door opening cycle.

For extreme conditions, use of a Unitrol arm is recommended. Available with or without hold open.



CloserPlus Ramp™

The CLP-R uses a patent pending ramp and plunger design that easily slides into place reducing wear often seen on traditional hold open arms. Ideal for applications where the door will constantly be pulled out of hold open.

NORTON RIXSON

ASSA ABLOY

8000 SERIES
ARCHITECTURAL DOOR CLOSER

APPLICATIONS



Regular Rigid Arm

This double lever arm features a non-adjustable secondary arm. Orbitally riveted joints prevent tampering or disassembly. Prefix "R" to model number. Available non-hold open only.



Non-hold open arm shown

Parallel Rigid Offset Arm

This heavy-duty parallel rigid arm provides additional vertical clearance. It is well suited for applications where weather stripping or other hardware prevents the use of the standard Parallel Rigid (PR) soffit plate. The non-hold open and hold arms allow 1-1/4" clearance. When used in conjunction with a 6891 spacer block, the PRO arm provides 1-7/8" clearance to accommodate the use of a surface overhead stop/holder.



Parallel



Top Jamb

Unitrol® Arm

Can be used for either parallel arm or top jamb applications. Unitrol arms combine the features of a double lever arm overhead door stop/holder with the backcheck feature of the door closer to reduce door stopping shock loads to a minimum. The Unitrol uses a compression spring buffer at the soffit plate/arm shoe that will absorb 30 lbs. of force, 5° prior to the door's dead stop. Coupled with the door closer's backcheck feature, this arm provides the most controlled stop available with a surface door closer.

For parallel arm applications there are three different length arm assemblies. Each length is designed for a specific range of door widths, to provide precise door control. This further lessens the dead stop impact on the door's hinges/pivots.

Only available in painted finishes.

NORTON RIXSON

ASSA ABLOY

8000 SERIES
ARCHITECTURAL DOOR CLOSER

APPLICATIONS



Pull Side



Low Profile Pull Side



Push Side



Low Profile Push Side

Slide Track

Whether pull or push side mounted, slide track applications provide the designer with the smoothest lines available in a surface mounted door closer. The single lever arm allows components to be located in a stack configuration to minimize projection and eliminate obtrusive arm angles. The arm geometry reduces door closer power efficiency by approximately 25% from that of a regular arm.

Standard Unit

Adjustable 85° to 110° (hold open and non-hold open). Track is supplied with a spring buffered stop. An auxiliary stop, by others, is recommended.

- Specify if hold open unit is required.
- 180° swing (non-hold open, pull side only) is also available. This track assembly requires that a door stop, by others, be supplied to stop the door.

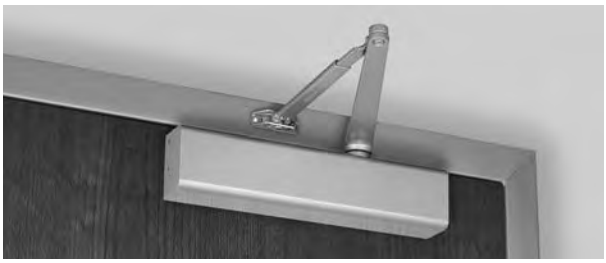

Regular Arm - Regular Arm allows closer to be installed where there is as little as 1" (25mm) of frame face or ceiling clearance.



Parallel Arm - Parallel Arm allows closer to be installed 1/2" (13mm) higher up on door than standard parallel arm application.

Low Profile Arm

Supplied with 8381/8581 series door closers for non-hold open installations only. Low profile arms have a reduced height elbow joint and a straight main arm. This enables the door closer to be installed in less vertical space.

- **Note:** Low profile arm door closers are not supplied with Tri-Style® packaging.

NORTON RIXSON

ASSA ABLOY

8000 SERIES
ARCHITECTURAL DOOR CLOSER

REGULAR ARM

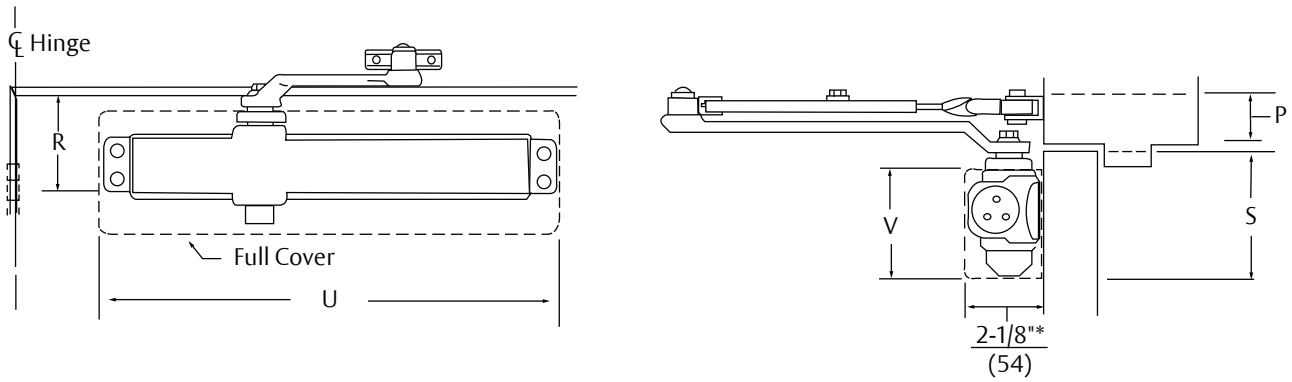

Mounting holes for closer body are spaced 3/4" (19mm) vertically x 12" (305mm) horizontally.

* Projection is for Slim Line or Full Covers. Projection for Metal Covers = 2-3/16" (56mm). Projection for Architectural Plastic & Architectural Metal Covers = 2-1/4" (57mm).

Closer Series	Covers	P Minimum Ceiling Clearance			R Minimum Top Rail				S Minimum Top Rail Clearance		U Closer Length	V Closer Height
					W/O Drop Plate		W/8146 Drop Plate					
		NHO	Low Profile	HO	NHO	Low Profile	NHO	Low Profile	NHO	Low Profile		
8101	No Cover	1-1/2" (38)	1" (25)	1-5/8" (41)	2-1/2" (64)	2-3/8" (60)	1-5/8" (41)	1-1/2" (38)	3-1/2" (89)	3-3/8" (86)	12-3/4" (324)	2-7/8" (73)
8301	Slim Line Plastic										13" (330)	
8501	Full Plastic											
8501M	Metal								4-1/4" (108)	4-1/8" (105)	13-5/8" (346)	3-3/4" (95)
8501A	Arch. Plastic								3-5/8" (92)	3-1/2" (89)	14" (356)	3-1/8" (79)
8501MA	Arch. Metal								3-1/2" (89)	3-3/8" (86)		3" (76)

Model Number	
Non-Hold Open	Hold Open
8301 8501	8301H 8501H

Notes:

- Door closers are set at midpower range from the factory
- Measurements are inches/mm unless noted
- Standard door widths: 30"-48" (76-122cm)

TOP JAMB ARM

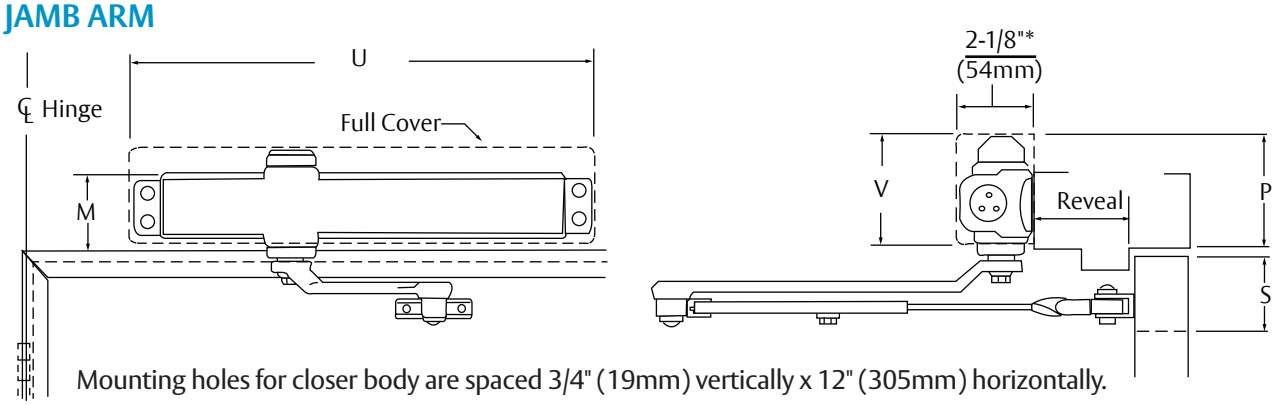

Mounting holes for closer body are spaced 3/4" (19mm) vertically x 12" (305mm) horizontally.

* Projection is for Slim Line or Full Covers. Projection for Metal Covers = 2-3/16" (56mm). Projection for Architectural Plastic & Architectural Metal Covers = 2-1/4" (57mm).

Closer Series	Covers	M Minimum Frame Face			P Minimum Ceiling Clearance			S Minimum Top Rail Clearance 5/8" (16mm) Frame Stop									U Closer Length	V Closer Height
								W/O Drop Plate			W/8146 Drop Plate			With 8148/8547 Drop Plate				
		W/O Drop Plate	With 8146 Drop Plate	With 8148, 8158, 8547, 8547A Drop Plate	W/O Drop Plate	With 8146 Drop Plate	With 8148, 8158, 8547, 8547A Drop Plate	NHO	Low Profile	HO	NHO	Low Profile	HO	NHO	Low Profile	HO		
8101	No Cover	1-3/4" (40)	1-1/8" (29)	1-1/2" (38)	2-3/4" (70)	1-5/8" (41)	1-1/2" (38)	2-1/4" (57)	N/A	2-1/2" (64)	3-3/8" (86)	2-3/4" (70)	3-5/8" (92)	4-3/8" (111)	3-3/4" (95)	4-5/8" (117)	12-3/4" (324)	2-7/8" (73)
8301	Slim Line Plastic																13" (330)	
8501	Full Plastic																	
8501M	Metal		N/A	1-5/8" (41)	3-3/4" (95)	N/A	1-5/8" (41)										13-5/8" (346)	3-3/4" (95)
8501A	Arch. Plastic			1-1/2" (38)	3" (76)		1-1/2" (38)										14" (356)	3-1/8" (79)
8501MA	Arch. Metal				2-7/8" (73)													3" (76)

Model Number	
Non-Hold Open	Hold Open
8301 8501	8301H 8501H

Notes:

- Door closers are set at midpower range from the factory
- Measurements are inches/mm unless noted
- Standard door widths: 30"-48" (76-122cm)
- Reveal range information is based upon 1-3/4" (44) doors hung on 4-1/2" wide hinges

Reveal Information

Model Number	Reveal Range Inches (mm)	Maximum Door Opening	
		NHO	HO
J8301, J8501	2-3/4" (70) to 4-1/4" (108)	180°	
J8301, J8501	4-1/4" (108) to 7" (178)	150°	
J8301H, J8501H	2-1/8" (54) to 4-1/4" (108)		180°
J8301H, J8501H	4-1/4" (108) to 6-3/4" (171)		150°

Reveal Information (regular arm installed top jamb)

Model Number	Reveal Range Inches (mm)	Maximum Door Opening	
		NHO	HO
8301, 8501	0 to 2-7/8" (73)	180°	—
8301, 8501 w/Drop Plate^^	0 to 2-3/4" (70)	180°	
8301H, 8501H	0 to 2-3/4" (70)		180°

^^ Drop plate 8146, 8148, 8158, 8547 or 8547A

NORTON RIXSON

ASSA ABLOY

8000 SERIES
ARCHITECTURAL DOOR CLOSER

PARALLEL ARM

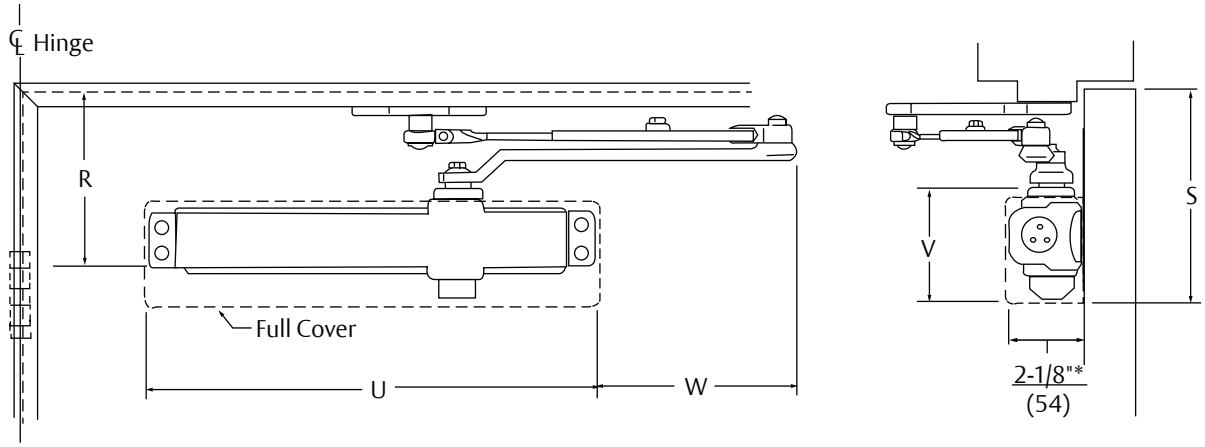

Mounting holes for closer body are spaced 3/4" (19mm) vertically x 12" (305mm) horizontally.

* Projection is for Slim Line or Full Covers. Projection for Metal Covers = 2-3/16" (56mm). Projection for Architectural Plastic & Architectural Metal Covers = 2-1/4" (57mm).

Closer Series	Covers	R Minimum Top Rail Minimum Top Rail 5/8" (16mm) Frame Stop						S Minimum Top Rail Clearance			U Closer Length	V Closer Height	W Arm Extension
		W/O Drop Plate			With 8148, 8158, 8548, 8548A Drop Plate								
		NHO	Low Profile	HO	NHO	Low Profile	HO	NHO	Low Profile	HO			
8101	No Cover	5-1/4" (133)	4-5/8" (117)	5-1/4" (133)	3" (76)	2-3/8" (60)	3" (76)	6-1/4" (159)	5-5/8" (143)	6-1/4" (159)	12-3/4" (324)	2-7/8" (73)	8-1/8" (206)
8301	Slim Line Plastic										13" (330)		8" (203)
8501	Full Plastic												
8501M	Metal							6-7/8" (175)	6-1/4" (159)	6-7/8" (175)	13-5/8" (346)	3-3/4" (95)	7-5/8" (194)
8501A	Arch. Plastic							6" (152)	5-3/8" (137)	6" (152)	14" (356)	3-1/8" (79)	
8501MA	Arch. Metal							5-7/8" (149)	5-1/4" (133)	5-7/8" (149)		3" (76)	

Model Number	
Non-Hold Open	Hold Open
8301 8501	8301H 8501H

Notes:

- Door closers are set at midpower range from the factory
- Measurements are inches/mm unless noted
- Standard door widths: 30"-48" (76-122cm)

PARALLEL RIGID ARM

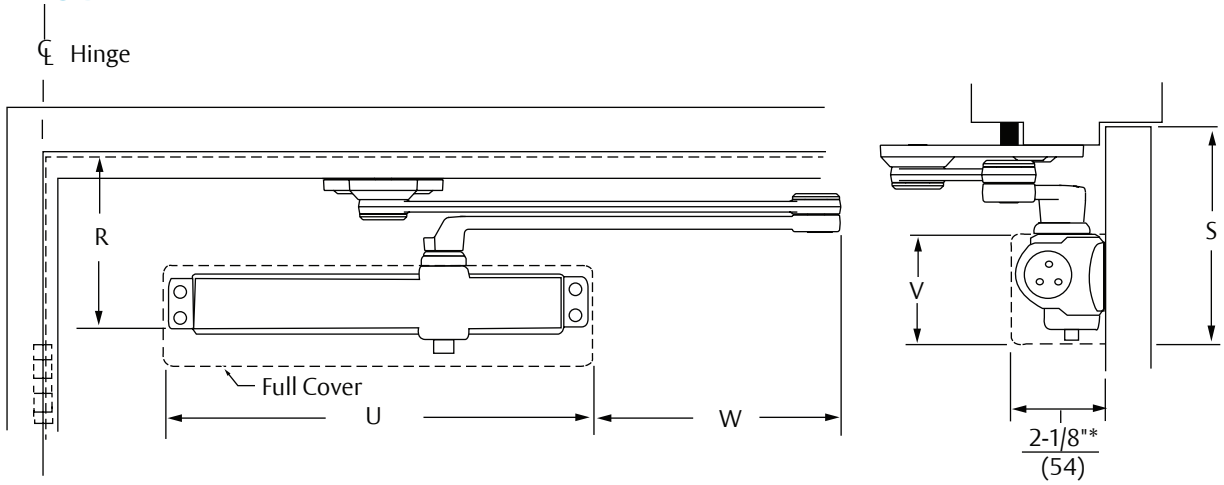

Mounting holes for closer body are spaced 3/4" (19mm) vertically x 12" (305mm) horizontally.

* Projection is for Slim Line or Full Covers. Projection for Metal Covers = 2-3/16" (56mm). Projection for Architectural Plastic & Architectural Metal Covers = 2-1/4" (57mm).

Closer Series	Covers	R Minimum Top Rail		S Minimum Top Rail Clearance	U Closer Length	V Closer Height	W Arm Extension
		W/O Drop Plate	With Drop Plate				
8101	No Cover	4-5/8" (117)	2-3/8" (60)	5-7/8" (149)	12-3/4" (324)	2-7/8" (73)	8" (203)
8301	Slim Line Plastic				13" (330)		
8501	Full Plastic						
8501M	Metal			6-1/2" (165)	13-5/8" (346)	3-7/8" (98)	7-5/8" (194)
8501A	Arch. Plastic			6" (152)	14" (356)	3-1/8" (79)	7-1/2" (191)
8501MA	Arch. Metal			5-7/8" (149)		3" (76)	

Model Number	
Stop Only	Hold Open
PR8301 PR8501	PR8301H PR8501H

Notes:

- Door closers are set at midpower range from the factory
- Measurements are inches/mm unless noted
- Standard door widths: 28"-48" (71-122cm)

NORTON RIXSON

ASSA ABLOY

8000 SERIES
ARCHITECTURAL DOOR CLOSER

CLOSERPLUS® ARM

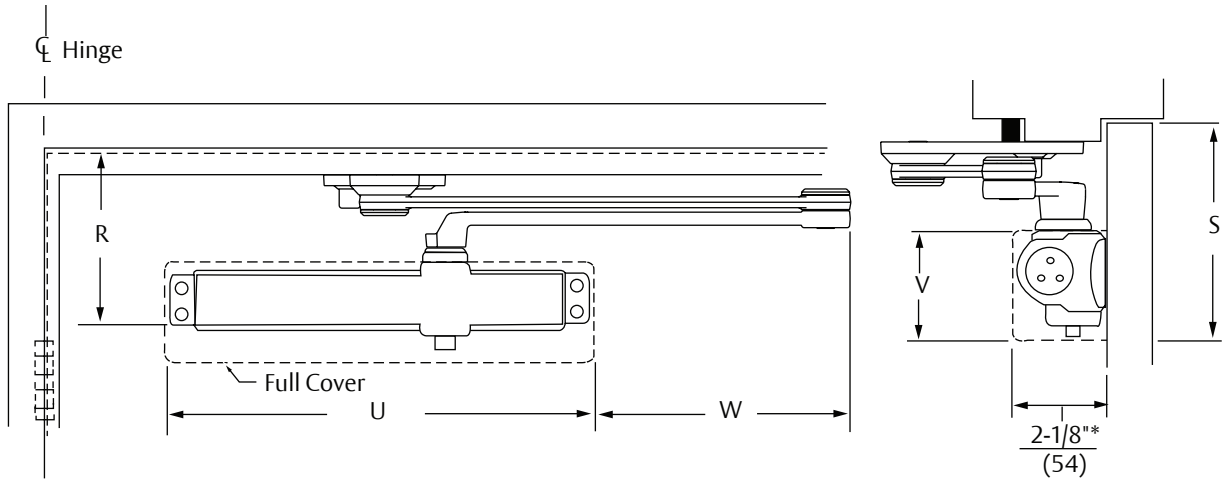

Mounting holes for closer body are spaced 3/4" (19mm) vertically x 12" (305mm) horizontally.

* Projection is for Slim Line or Full Covers. Projection for Metal Covers = 2-3/16" (56mm). Projection for Architectural Plastic & Architectural Metal Covers = 2-1/4" (57mm).

Closer Series	Covers	R Minimum Top Rail		S Minimum Top Rail Clearance	U Closer Length	V Closer Height	W Arm Extension
		W/O Drop Plate	With Drop Plate				
8101	No Cover	4-5/8" (117)	2-3/8" (60)	5-7/8" (149)	12-3/4" (324)	2-7/8" (73)	8" (203)
8301	Slim Line Plastic				13" (330)		
8501	Full Plastic						
8501M	Metal			6-1/2" (165)	13-5/8" (346)	3-7/8" (98)	7-5/8" (194)
8501A	Arch. Plastic			6" (152)	14" (356)	3-1/8" (79)	7-1/2" (191)
8501MA	Arch. Metal			5-7/8" (149)		3" (76)	

Model Number		
Stop Only	Thumbturn Hold Open	Ramp Hold Open
CLP8301 CLP8501	CLP8301T CLP8501T	CLP8301R CLP8501R

Notes:

- Door closers are set at midpower range from the factory
- Measurements are inches/mm unless noted
- Standard door widths: 28"-48" (71-122cm)

NORTON RIXSON

ASSA ABLOY

8000 SERIES
ARCHITECTURAL DOOR CLOSER

CLOSERPLUS SPRING™ ARM

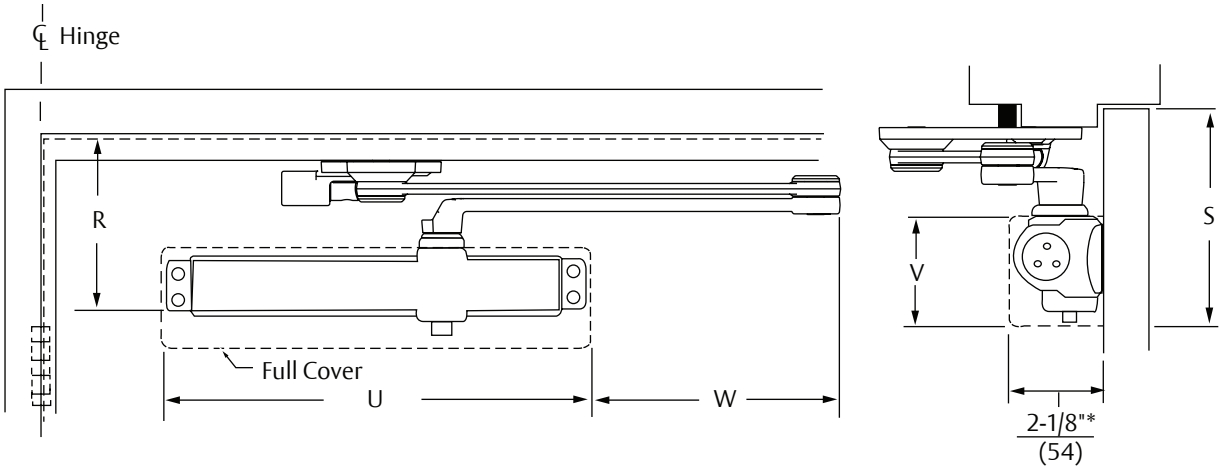

Mounting holes for closer body are spaced 3/4" (19mm) vertically x 12" (305mm) horizontally.

* Projection is for Slim Line or Full Covers. Projection for Metal Covers = 2-3/16" (56mm). Projection for Architectural Plastic & Architectural Metal Covers = 2-1/4" (57mm).

Closer Series	Covers	R Minimum Top Rail		S Minimum Top Rail Clearance	U Closer Length	V Closer Height	W Arm Extension
		W/O Drop Plate	With Drop Plate				
8101	No Cover	4-5/8" (117)	2-3/8" (60)	5-7/8" (149)	12-3/4" (324)	2-7/8" (73)	8" (203)
8301	Slim Line Plastic				13" (330)		
8501	Full Plastic						
8501M	Metal			6-1/2" (165)	13-5/8" (346)	3-7/8" (98)	7-5/8" (194)
8501A	Arch. Plastic			6" (152)	14" (356)	3-1/8" (79)	7-1/2" (191)
8501MA	Arch. Metal			5-7/8" (149)		3" (76)	

Model Number	
Stop Only	Hold Open
CPS8301 CPS8501	CPS8301T CPS8501T

Notes:

- Door closers are set at midpower range from the factory
- Measurements are inches/mm unless noted
- Standard door widths: 28"-48" (71-122cm)

Experience a safer and more open world

NORTON RIXSON

ASSA ABLOY

8000 SERIES
ARCHITECTURAL DOOR CLOSER

REGULAR RIGID HEAVY-DUTY ARM

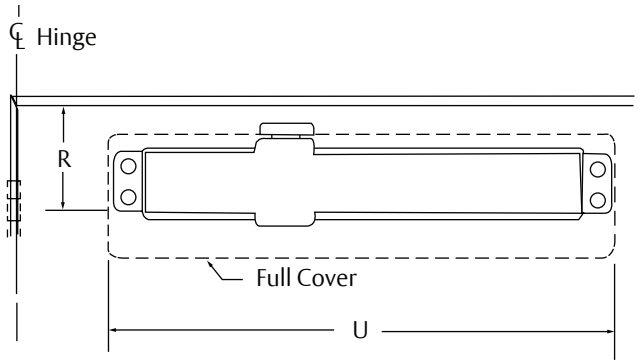

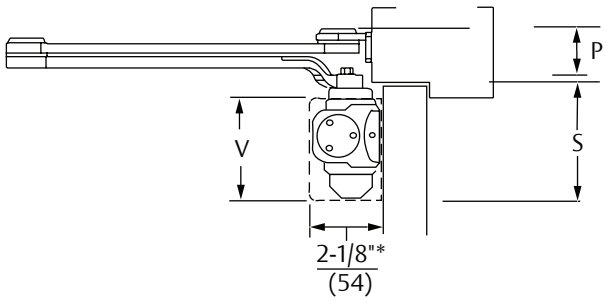

Mounting holes for closer body are spaced 3/4" (19mm) vertically x 12" (305mm) horizontally.

* Projection is for Slim Line or Full Covers. Projection for Metal Covers = 2-3/16" (56mm). Projection for Architectural Plastic & Architectural Metal Covers = 2-1/4" (57mm).

Closer Series	Covers	P Minimum Ceiling Clearance	R Minimum Top Rail		S Minimum Top Rail Clearance	U Closer Length	V Closer Height
			W/O Drop Plate	W/8146 Drop Plate			
		NHO	NHO	NHO	NHO		
8101	No Cover	1-3/4" (44)	2-1/2" (64)	1-5/8" (41)	3-1/2" (89)"	12-3/4" (324)	2-7/8" (73)
8301	Slim Line Plastic					13" (330)	
8501	Full Plastic						
8501M	Metal				4-1/4" (108)	13-5/8" (346)	3-3/4" (95)
8501A	Arch. Plastic				3-5/8 (92)	14" (356)	3-1/8" (79)
8501MA	Arch. Metal				3-1/2" (89)		3" (76)

Model Number
Non-Hold Open Only
R8301 R8501

Notes:

- Door closers are set at midpower range from the factory
- Measurements are inches/mm unless noted
- Standard door widths: interior – 36"-54" (91-137cm)
  exterior – 30"-52" (76-132cm)

PARALLEL RIGID OFFSET ARM

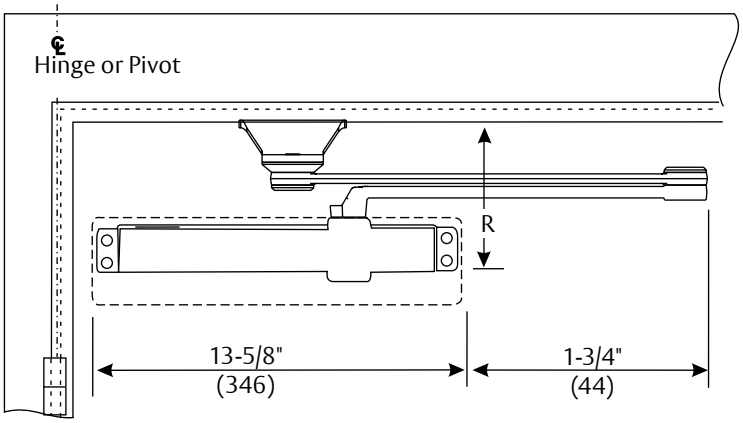

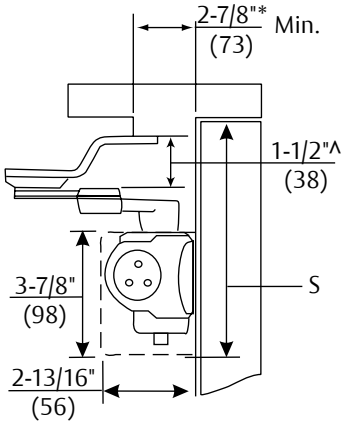

Mounting holes for closer body are spaced 2-3/8" (60mm) vertically x 6-3/4" (171mm) horizontally.
^ If clearance greater than 1-1/2" is needed, 6891 spacer block is required.

* Projection is for Slim Line or Full Covers. Projection for Metal Covers = 2-3/16" (56mm). Projection for Architectural Plastic & Architectural Metal Covers = 2-1/4" (57mm).

R (inches/mm) Minimum Top Rail of Door with 5/8" (16mm) Frame Stop		S Minimum Top Rail of Door	
Without 6891 Spacer	**With 6891 Spacer**	**Without 6891 Spacer**	**With 6891 Spacer**
7-1/8" (181)	7-5/8" (194)	7-5/8" (194)	8-1/8" (206)

Model Number	
Non-Hold Open	**Hold Open**
PRO8301 PRO8501	PRO8301H PRO8501H

Notes:

- Door closers are set at midpower range from the factory
- Closers with hold open arms are handed. Specify when ordering.
- Measurements are inches/mm unless noted
- Standard door widths: interior 30"-48" (76-122cm)
  exterior 32-48" (81-122cm)

NORTON RIXSON

ASSA ABLOY

8000 SERIES
ARCHITECTURAL DOOR CLOSER

PARALLEL UNITROL® ARM

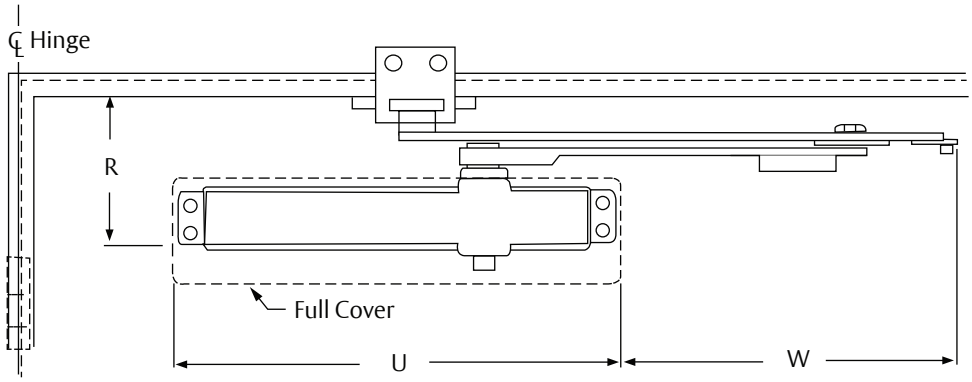

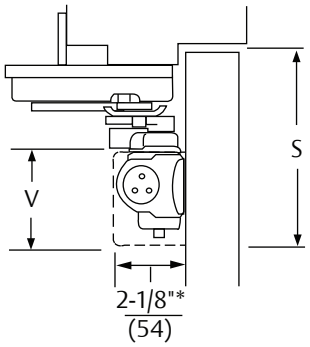

Mounting holes for closer body are spaced 3/4" (19mm) vertically x 12" (305mm) horizontally.

*Projection is for Slim Line or Full Covers. Projection for Metal Covers = 2-3/16" (56mm). Projection for Architectural Plastic & Architectural Metal Covers = 2-1/4" (57mm).

Closer Series	Door Width	Covers	R Minimum Top Rail		S Minimum	U Closer Length	V Closer Height	W Arm Extension
			W/O Drop Plate	With Drop Plate				
8301	28"-32"	Slim Line	4-3/4" (121)	2-1/2" (64)	5-3/4" (146)	13" (330)	2-7/8" (73)	8-3/8" (213)
	33"-41"							9-7/8" (251)
	42"-48"							11-1/4" (286)
8501	33"-41"^	Full Plastic						9-7/8" (251)
8501M		Metal			6-3/8" (162)	13-5/8" (346)	3-7/8 (98)	9-1/2" (241)
8501A		Arch. Plastic			5-1/2" (140)	14" (356)	3-1/8" (79)	9-3/8" (238)
8501MA		Arch. Metal			5-3/8" (137)		3" (76)	9" (229)

^ Consult installation instructions for additional door width dimensions.

Model Number		
Stop Only	Hold Open	x Specify Door Width
UNI8301 UNI8501	UNI8301H UNI8501H	

Notes:

- Door closers are set at midpower range from the factory
- Measurements are inches/mm unless noted
- Standard door widths: 28"-48" (71-122cm)

TOP JAMB UNITROL® ARM

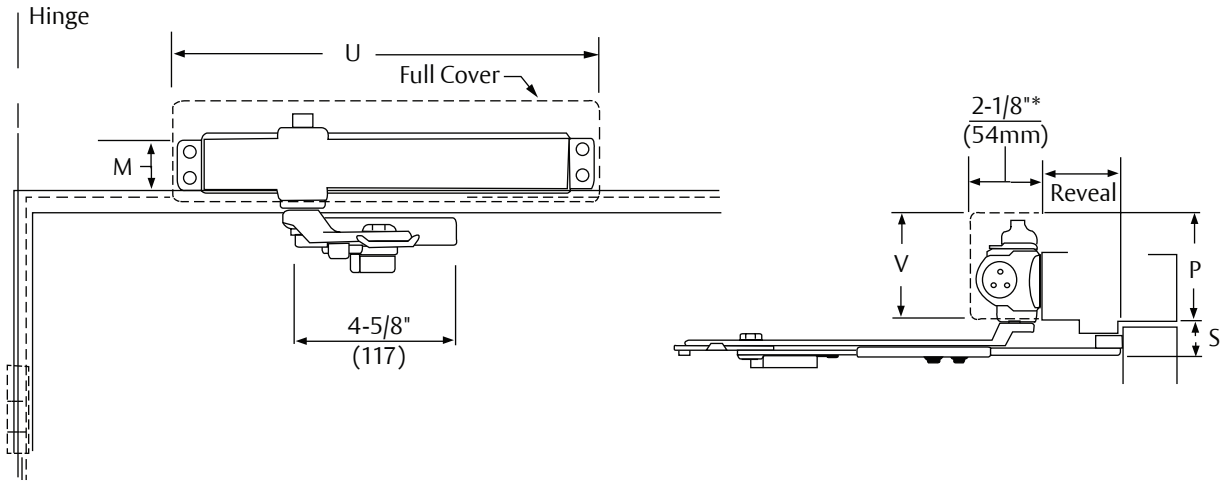

Mounting holes for closer body are spaced 3/4" (19mm) vertically x 12" (305mm) horizontally.

* Projection is for Slim Line or Full Covers. Projection for Metal Covers = 2-3/16" (56mm). Projection for Architectural Plastic & Architectural Metal Covers = 2-1/4" (57mm).

Closer Series	Covers	R Minimum Top Rail		P Minimum Ceiling Clearance		S Minimum Top Rail Clearance		U Closer Length	V Closer Height
		W/O Drop Plate	With 8148, 8158, 8547, 8547A Drop Plate	W/O Drop Plate	With Drop Plate	W/O Drop Plate	With 8148, 8158, 8547, 8547A Drop Plate		
8301	Slim Line	1-3/4" (44)	1-1/2" (38)	2-3/4" (70)	1-1/2" (38)	1-7/8" (48)	3-3/4" (95)	13" (330)	2-7/8" (73)
8501	Full								
8501M	Metal		1-5/8" (41)	3-3/4" (95)	1-5/8" (41)			13-5/8" (346)	3-7/8" (98)
8501A	Arch. Plastic		1-1/2" (38)	3" (76)	1-1/2" (38)			14" (356)	3-1/8" (79)
8501MA	Arch. Metal			2-7/8" (73)					

Model Number		
Non-Hold Open	Hold Open	x Specify Frame Reveal
UNIJ8301 UNIJ8501	UNIJ8301H UNIJ8501H	

Notes:

- Door closers are set at midpower range from the factory
- Measurements are inches/mm unless noted
- Standard door widths: 28"-48" (71-122cm)

NORTON RIXSON

ASSA ABLOY

8000 SERIES
ARCHITECTURAL DOOR CLOSER

PULL SIDE SLIDE TRACK

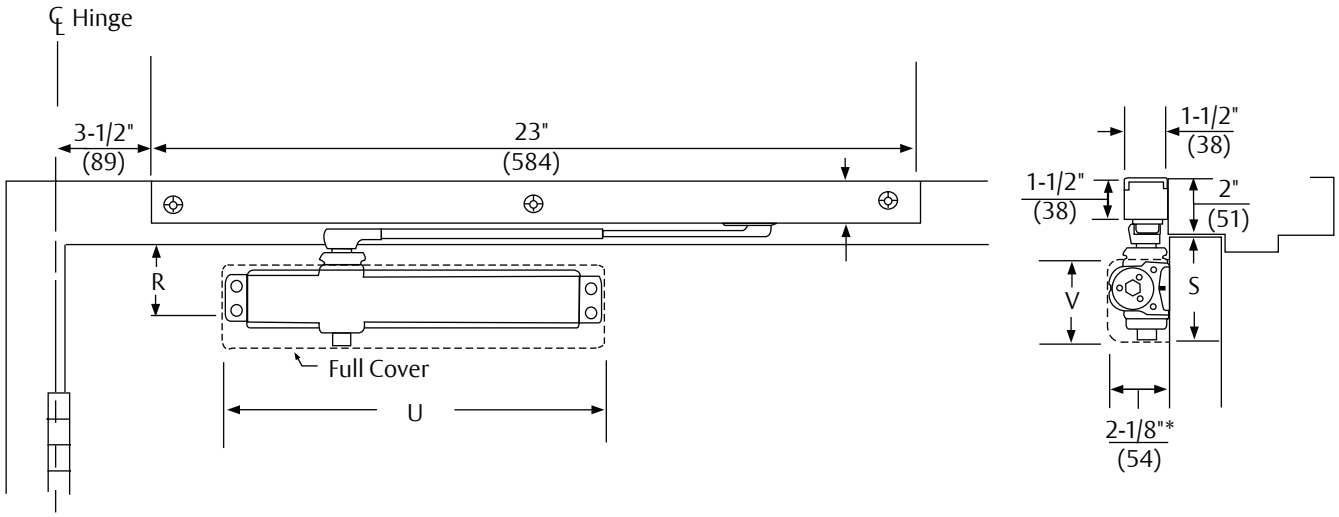

Mounting holes for closer body are spaced 3/4" (19mm) vertically x 12" (305mm) horizontally.

* Projection is for Slim Line or Full Covers. Projection for Metal Covers = 2-3/16" (56mm). Projection for Architectural Plastic & Architectural Metal Covers = 2-1/4" (57mm).

Closer Series	R Minimum Top Rail		S Minimum Top Rail Clearance				U Closer Length				V Closer Height			
	W/O Drop Plate	With 8146 Drop Plate	Slim or Full Cover	Metal Cover	Arch Plastic	Arch Metal	Slim or Full Cover	Metal Cover	Arch Plastic	Arch Metal	Slim or Full Cover	Metal Cover	Arch Plastic	Arch Metal
8301ST	2-1/2" (64)	1-5/8" (41)	3-1/2" (89)	4-1/8" (105)	3-5/8" (92)	3-1/2" (89)	13" (330)	13-5/8" (346)	14" (356)		2-7/8" (73)	3-3/4" (95)	3-1/8" (79)	3" (76)
8501ST														

Model Number		
Non-Hold Open		Hold Open
85°-110°++	85°-180°~~	85°-110°~~
8301ST 8501ST	8301ST-180 8501ST-180	8301STH 8501STH

++ Track is furnished with a spring buffered stop. Additional stop, by others, is recommended where abusive conditions are anticipated.

~~ Track is supplied without the spring buffered assembly. An auxiliary door stop, by others, is required.

Notes:

- Door closers are set at midpower range from the factory
- Measurements are inches/mm unless noted
- Standard door widths: interior 32"-48" (81-122cm)
  exterior 32"-38" (81-97cm)

PUSH SIDE SLIDE TRACK

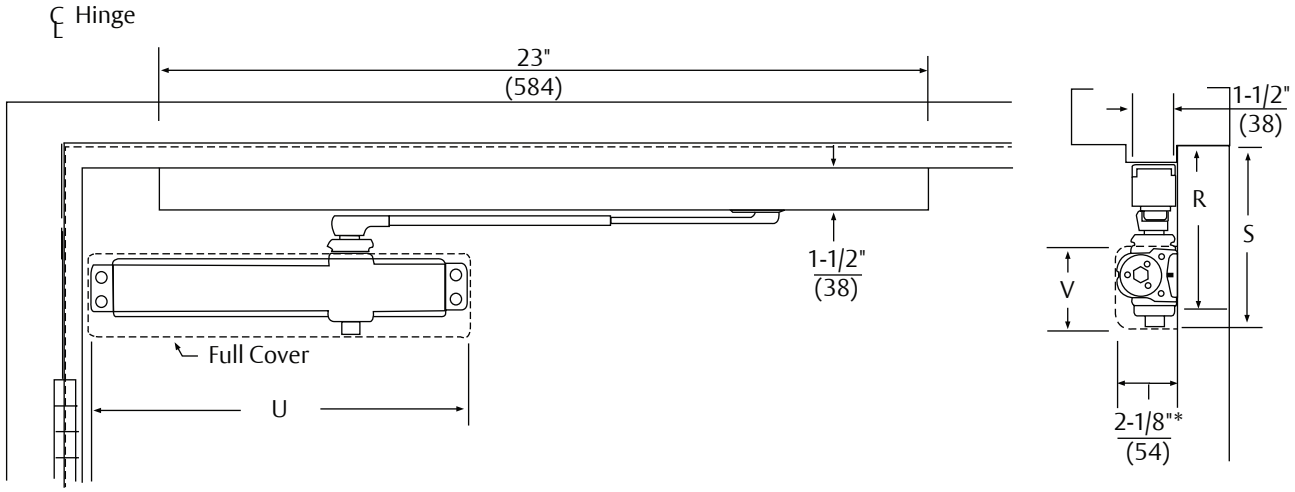

Mounting holes for closer body are spaced 3/4" (19mm) vertically x 12" (305mm) horizontally.

* Projection is for Slim Line or Full Covers. Projection for Metal Covers = 2-3/16" (56mm). Projection for Architectural Plastic & Architectural Metal Covers = 2-1/4" (57mm).

Closer Series	R Minimum Top Rail		S Minimum Top Rail Clearance				U Closer Length				V Closer Height			
	W/O Drop Plate	With 8146, 8158, 8548, 8548A Drop Plate	Slim or Full Cover	Metal Cover	Arch Plastic	Arch Metal	Slim or Full Cover	Metal Cover	Arch Plastic	Arch Metal	Slim or Full Cover	Metal Cover	Arch Plastic	Arch Metal
PS8301ST	5" (127)	2-3/4" (70)	6" (152)	6-5/8" (168)	6-1/8" (156)	6" (152)	13" (330)	13-5/8" (346)	14" (356)		2-7/8" (73)	3-3/4" (95)	3-1/8" (79)	3" (76)
PS8501ST														

Model Number	
Non-Hold Open	Hold Open
85°-110°	
PS8301ST PS8501ST	PS8301STH PS8501STH

Notes:

- Door closers are set at midpower range from the factory
- All track assemblies are supplied with a spring buffered stop
- A separate door stop, by others, is recommended where abusive conditions are anticipated
- Measurements are inches/mm unless noted
- Standard door widths: interior 32"-48" (81-122cm)
  exterior 32"-38" (81-97cm)

NORTON RIXSON

ASSA ABLOY

8000 SERIES
ARCHITECTURAL DOOR CLOSER

LOW PROFILE PULL SIDE SLIDE TRACK

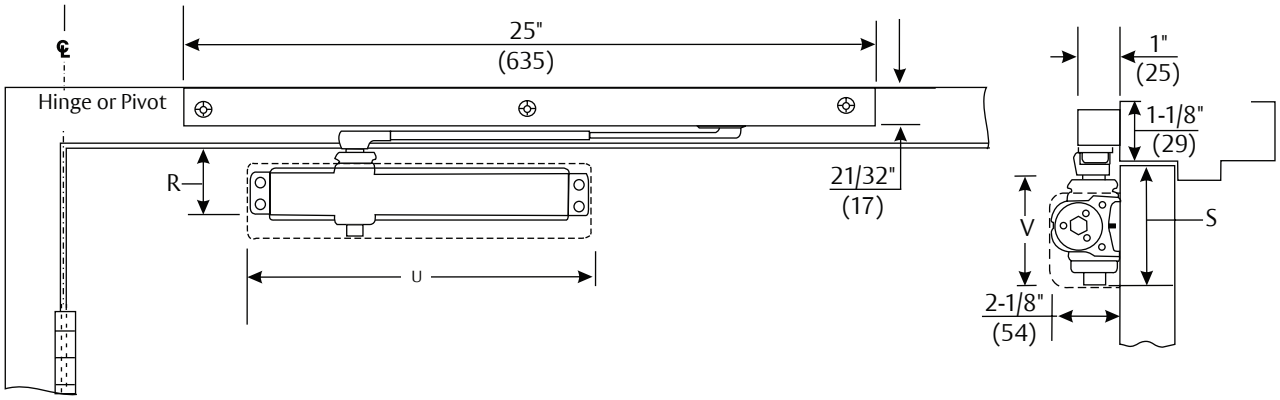

Mounting holes for closer body are spaced 3/4" (19mm) vertically x 12" (305mm) horizontally.

*Projection is for Slim Line or Full Covers. Projection for Metal Covers = 2-3/16" (56mm). Projection for Architectural Plastic & Architectural Metal Covers = 2-1/4" (57mm).

Closer Series	R Minimum Top Rail		S Minimum Top Rail Clearance				U Closer Length				V Closer Height			
	W/O Drop Plate	With 8146 Drop Plate	Slim or Full Cover	Metal Cover	Arch Plastic	Arch Metal	Slim or Full Cover	Metal Cover	Arch Plastic	Arch Metal	Slim or Full Cover	Metal Cover	Arch Plastic	Arch Metal
8341ST	2-1/2" (64)	5/8" (16)	3" (76)	4-5/8" (117)	3-1/8" (79)	3" (76)	13" (330)	13-5/8" (346)	14" (356)		3" (76)	3-7/8" (98)	3-1/4" (83)	3-1/8" (79)
8541ST														

Model Number	
Non-Hold Open	Hold Open
8341ST 8541ST	8341STH 8541STH

Notes:

- Door closers are set at midpower range from the factory
- Measurements are inches/mm unless noted
- Standard door widths: **interior only** 32"-48" (81-122cm)

LOW PROFILE PUSH SIDE SLIDE TRACK

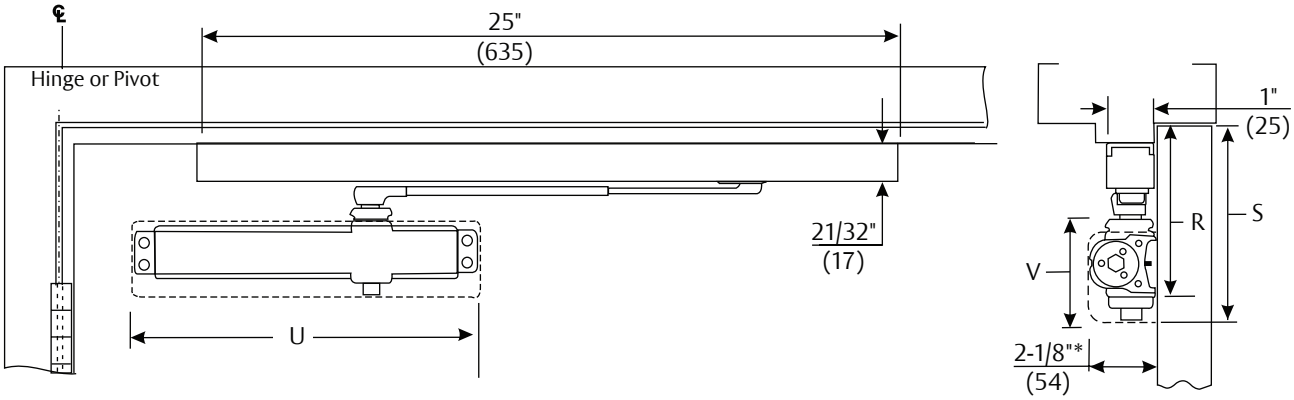

Mounting holes for closer body are spaced 3/4" (19mm) vertically x12" (305mm) horizontally.

*Projection is for Slim Line or Full Covers. Projection for Metal Covers = 2-3/16" (56mm). Projection for Architectural Plastic & Architectural Metal Covers = 2-1/4" (57mm).

Closer Series	R Minimum Top Rail		S Minimum Top Rail Clearance				U Closer Length				V Closer Height			
	W/O Drop Plate	With 8146, 8158, 8548, 8548A Drop Plate	Slim or Full Cover	Metal Cover	Arch Plastic	Arch Metal	Slim or Full Cover	Metal Cover	Arch Plastic	Arch Metal	Slim or Full Cover	Metal Cover	Arch Plastic	Arch Metal
PS8341ST PS8541ST	4" (102)	1-3/4" (44)	5" (127)	5-5/8" (143)	5-1/8" (130)	5" (127)	13" (330)	13-5/8" (346)	14" (356)		3" (76)	3-7/8" (98)	3-1/4" (83)	3-1/8" (79)

Model Number	
Non-Hold Open	Hold Open
PS8341ST PS8541ST	PS8341STH PS8541STH

Notes:

- Door closers are set at midpower range from the factory
- Measurements are inches/mm unless noted
- Standard door widths: **interior only** 32"-48" (81-122cm)

NORTON RIXSON

ASSA ABLOY

8000 SERIES
ARCHITECTURAL DOOR CLOSER

REGULAR ARM

Closer Mounting Plate Slim Line Installations

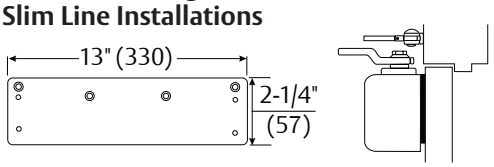

Narrow Top Rail - 8146 Drop Plate:

For use where the narrow top rail of the door prevents the closer from being mounted directly on to the door surface. This drop plate must be used for any Series 8000 closer mounted on a top rail between 1-9/16" and 2-7/16" (40 and 62mm) in height, or any Series 8080 closer mounted on a top rail between 1-7/16" and 2-5/16" (36 and 59mm) in height.

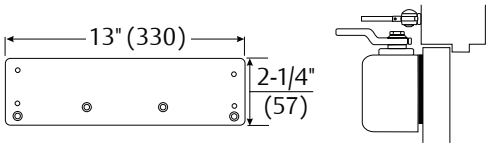

Concealed Door Holder - 8146 Drop Plate:

For use where a concealed door holder prevents normal mounting of the closer to the door. This is the same plate used for narrow rail mounting, but is inverted for this application to permit the mounting screws to clear the bottom of the door-holder preparation in the top rail of the door. This places the centerline of the plate's upper mounting screws at 2-3/16" (56mm) from the top of the door.

Full Cover Installations

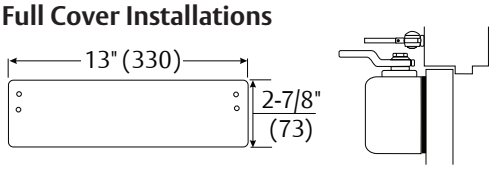

Exposed Back - 8445 Molded Full Cover Decorative Back Plate:

For use on doors with glass lights where a closer with a molded full cover is installed and the closer back is exposed. This plate covers the back of the installation to give a pleasing appearance from the reverse side.

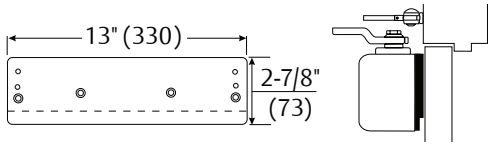

Exposed Back/Narrow Top Rail - Exposed Back Concealed Door Holder - 8446 Molded Full Cover Drop Plate Kit:

For use with molded full cover installation when an 8146 Plate is needed as a drop plate on a narrow top rail, or as a clearance plate for a concealed door holder, and the closer back is exposed. Kit contains an 8146 Drop Plate and an 8445 Decorative Plate.

Metal Cover Installations

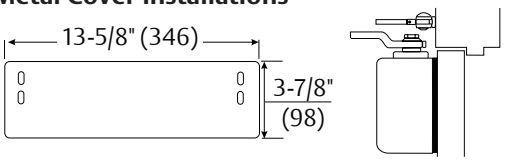

Exposed Back - 8545 Metal Cover Decorative Back Plate:

For use on doors with glass lights where a closer with a metal full cover is installed and the closer back is exposed. This plate covers the back of the installation to give a pleasing appearance from the reverse side.

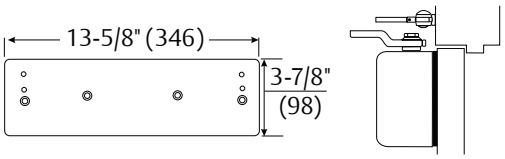

Concealed Door Holder - 8546 Metal Cover Drop Plate:

For uswhere a concealed door holder prevents the normal mounting of the closer to the door. This plate permits the mounting screws to clear the bottom of the door-holder preparation in the top rail of the door. This places the centerline of the plate's upper mounting screws at 2-3/16" (56mm) from the top of the door.

Exposed Back/Narrow Top Rail - 8549 Metal Cover Drop Plate Kit:

For use with metal full cover installations, when an 8146 Plate is needed as a drop plate on a narrow top rail and the closer back is exposed. Kit contains an 8146 Drop Plate and an 8545 Decorative Plate.

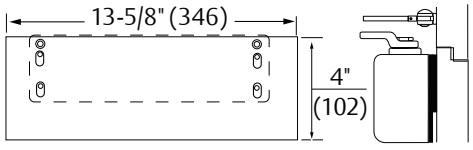

REGULAR ARM

Closer Mounting Plate
Architectural Plastic or Metal Cover Installations

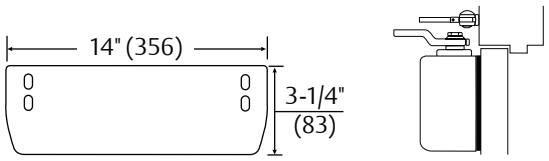

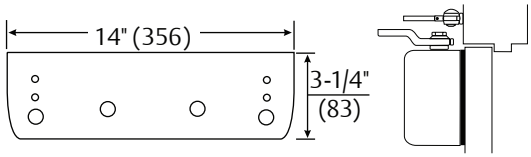

Exposed Back - 8545A Architectural Plastic or Architectural Metal Cover Decorative Back Plate:

For use on doors with glass lights where a closer with an architectural plastic or metal cover is installed and the closer back is exposed. This plate covers the back of the installation to give a pleasing appearance from the reverse side.

Concealed Door Holder - 8546A Architectural Plastic or Architectural Metal Cover Drop Plate:

For use where a concealed door holder prevents the normal mounting of the closer to the door. This plate permits the mounting screws to clear the bottom of door-holder preparation in the top rail of the door. This places the centerline of the plate's upper mounting screws at 2-3/16" (56mm) from the top of the door.

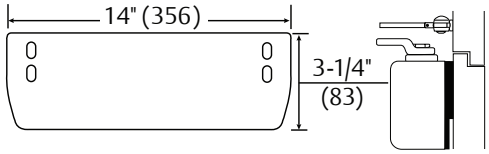

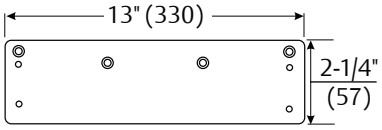

Exposed Back/Narrow Top Rail - 8549A Architectural Plastic or Architectural Metal Cover Drop Plate Kit:

For use with architectural plastic or metal cover installations when an 8146 plate is needed as a drop plate on a narrow top rail and the closer back is exposed. Kit contains an 8146 Drop Plate and an 8545A Decorative Plate.

8000 SERIES
ARCHITECTURAL DOOR CLOSER

REGULAR ARM

Brackets for Non-Hold Open Arms

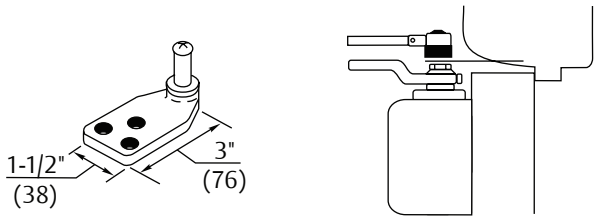

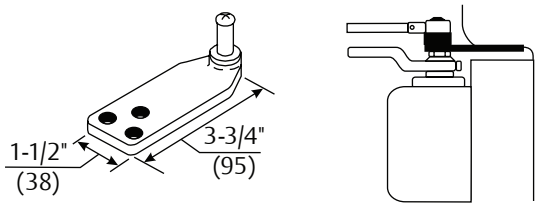

Molded/Bull Nose Trim - 2403B Bracket:

For use where the door frame has molded or bull nose trim which will not accept a standard non-hold open shoe. The bracket is mortised into the frame rabbet, and projects beyond the face of the frame. It will accommodate a frame rabbet up to 2" (51mm) deep.

Molded / Bull Nose Trim - 2403-3/4 Bracket:

This bracket is similar to, but longer than, the 2403B bracket. It is designed to accommodate frame rabbets from 2" to 2-7/8" (51 to 73mm) deep.

Brackets for Non-Hold Open Arms

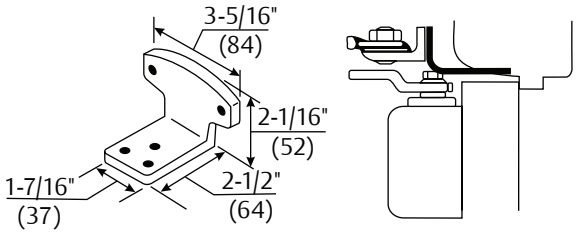

Molded / Bull Nose Trim - 80 Bracket:

For use where the door frame has molded or bull nose trim which will not accept a standard hold open shoe. It is mortised into the frame rabbet, and projects beyond the face of the frame. It will accommodate a rabbet up to 2" (51mm) deep. This bracket is used in combination with the standard hold-open mounting shoe.

TOP JAMB ARM

Closer Mounting Plates
Slim Line Installations

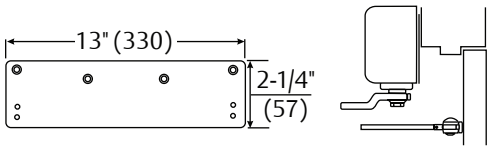

Low Ceiling Clearance - 8146 Drop Plate:

For use where low ceiling clearance prevents normal top jamb mounting. This plate is used when clearance is from 1-7/8" to 2-7/8" (48 to 73mm). Where ceiling clearance is less than 1-7/8" (48mm) see 8148 Drop Plate on page 106.

Overhead Door Holder - 8146 Drop Plate:

For use where a surface or concealed overhead door holder prevents normal top jamb mounting. This plate drops the closer and allows arm mounting screws to clear the bottom of the door holder. This places the centerline of the arm mounting screws at 2-7/8" (73mm) from the top of the door.

TOP JAMB ARM

Closer Mounting Plates
Slim Line Installations

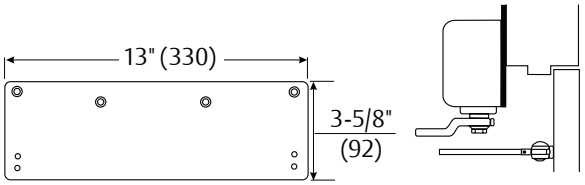

Low Ceiling Clearance - 8148 Drop Plate:

For use where the ceiling clearance is between 1-1/2" and 1-3/4" (38 and 44mm).

Metal Cover Installations

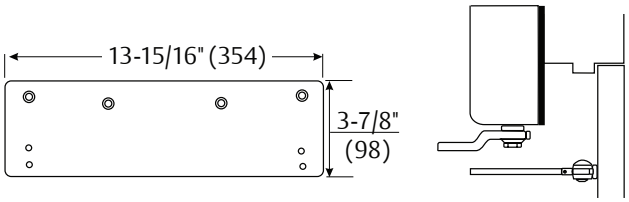

Low Ceiling Clearance - Overhead Door Holder - 8547 Metal Full Cover Drop Plate:

For use where a low ceiling clearance prevents normal top jamb mounting. This plate is used when the clearance is between 1-5/8" and 3-7/8" (41 and 98mm). Or for use where a surface or concealed overhead door holder prevents normal top jamb mounting of a closer with a metal full cover.

This plate drops the closer and allows arm mounting screws to clear the bottom of the door holder. This places the centerline of the arm mounting screws at 3-7/8" (98mm) from the top of the door.

Architectural Plastic or Metal Cover Installations

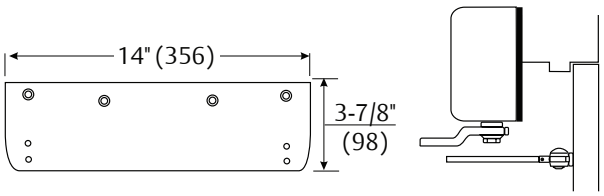

Low Ceiling Clearance - Overhead Door Holder - 8547A Architectural Plastic or Architectural Metal Cover Drop Plate:

For use where low ceiling clearance prevents normal top jamb mounting. This plate is used when the clearance is between 1-5/8" and 3-7/8" (41 and 98mm). Also for use where a surface or concealed overhead door holder prevents normal top jamb mounting of a closer with an architectural plastic or metal full cover. This plate drops the closer and allows arm mounting screws to clear the bottom of the door holder. This places the centerline of the arm mounting screws at 3-7/8" (98mm) from the top of the door.

8000 SERIES
ARCHITECTURAL DOOR CLOSER

PARALLEL ARM

Closer Mounting Plates
Slim Line Installations

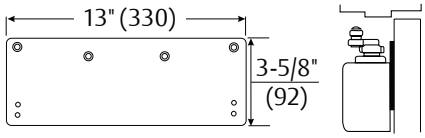

Narrow Top Rail - 8148 Drop Plate:

For use where a narrow top rail prevents the closer from being mounted directly to the door surface. This drop plate can be used to mount a closer on a top rail as narrow as 2-7/8" (73mm) in height.

Full Cover Installations

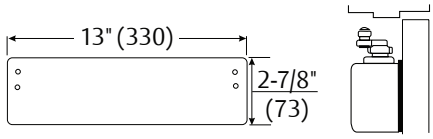

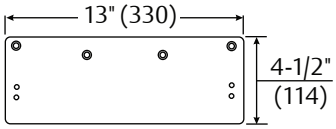

Exposed Back - 8445 Molded Full Cover Decorative Back Plate:

For use on doors with glass lights where a closer with molded full cover is installed and the closer back is exposed. This plate covers the back of the installation to give a pleasing appearance from the reverse side.

Exposed Back/Narrow Top Rail - 8158 Molded Full Cover Drop Plate:

For use on doors with glass lights where a closer with molded full cover is installed and the back of the closer is exposed. This covers the back of the installation and gives a pleasing appearance from the reverse side.

Metal Cover Installations

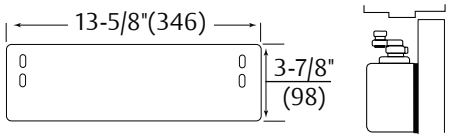

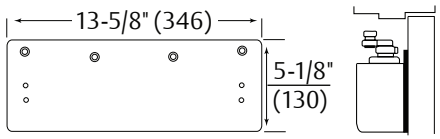

Exposed Back - 8545 Metal Full Cover Decorative Back Plate:

For use on doors with glass lights where a closer with full metal cover is installed and the back of the closer is exposed. This plate covers the back of the installation and gives a pleasing appearance from the reverse side.

Exposed Back/Narrow Top Rail - 8548 Metal Full Cover Drop Plate:

For use on doors with glass lights where a closer with metal full cover is installed on a narrow top rail, and the back of the cover is exposed. This drop plate can be used to mount a closer on a top rail as narrow as 2-7/8" (73mm) in height. This plate covers the back of the installation and gives a pleasing appearance from the reverse side.

Architectural Plastic or Metal Cover Installations

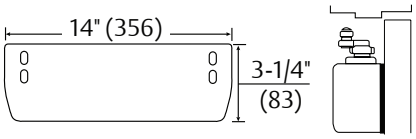

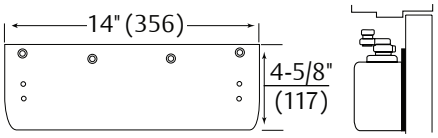

Exposed Back - 8545A Architectural Plastic or Architectural Metal Cover Decorative Back Plate:

For use on doors with glass lights where a closer with an architectural plastic or metal cover is installed and the closer back is exposed. This plate covers the back of the installation to give a pleasing appearance from the reverse side.

Exposed Back/Narrow Top Rail - 8548A Architectural Plastic or Architectural Metal Cover Drop Plate:

For use on doors with glass lights where a closer with an architectural plastic or metal cover is installed on a narrow top rail, and the back of the cover is exposed. This drop plate can be used to mount a closer on a top rail as narrow as 2-7/8" (73mm) in height. This plate covers the back of the installation to give a pleasing appearance from the reverse side.

PARALLEL ARM

Brackets for Non-Hold Open Arms

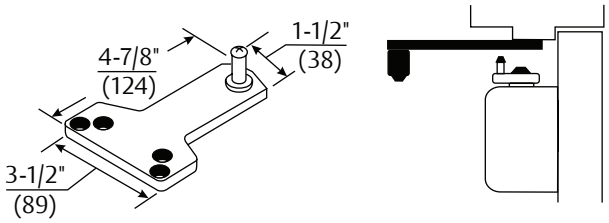

Standard Installation - 1618A Soffit Plate:

This soffit plate is supplied standard with parallel arm closers. It can be mounted where the frame soffit is as narrow as 1" (25 mm).

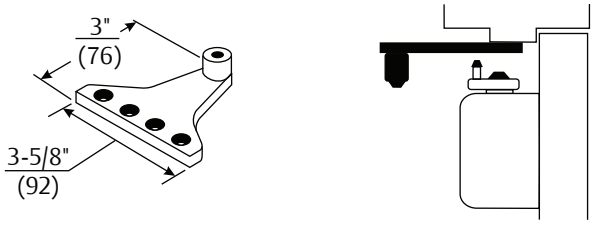

Narrow Frame/Removable Stop - 2018B Soffit Plate:

For use where a narrow frame or frame with removable stop does not permit use of the standard soffit plate. This soffit plate may be mounted on the frame soffit or the frame rabbet where the stop does not exceed 5/8" (16mm) in height. All of the screw holes are in a straight line, requiring as little as 1-1/4" (32mm) of frame reveal to mount bracket and maintain good closer arm geometry. Where the frame soffit is as wide as 2" (51mm), this soffit plate may be used to clear weather-stripping that is up to 1-3/8" (35mm) wide and 5/8" (16mm) in height.

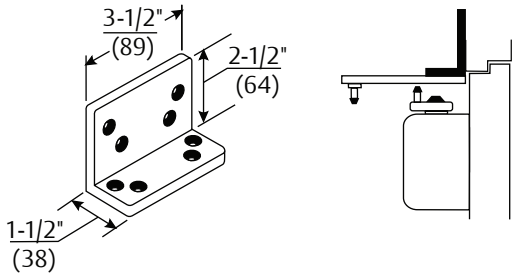

Flush Transom - 2022 Angle Bracket:

For use where rabbeted or flush transom conditions prevent installation of a soffit plate. Used in combination with the 1618 soffit plate, or may be used in combination with the 2018S soffit plate when it is necessary for the closer arm to clear a separate overhead door holder.

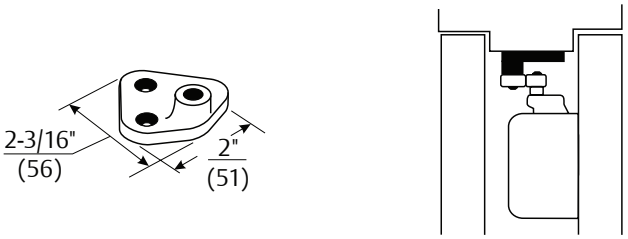

Mounting between Doors - 2018 Soffit Bracket:

For use where insufficient space between companion doors does not permit use of other soffit plates. This bracket permits mounting of the closer between doors with as little as 3" (76mm) of header space. Permits closer arm to clear up to 5/8" (16mm) high stop.

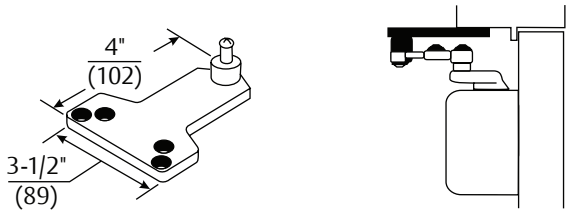

Blade/Applied Stop - 2018D Soffit Plate:

For use where a blade or applied stop does not permit installation of the standard soffit plate. Mounts to either the frame soffit or rabbet. Since this soffit plate projects 7/8" (22mm) less than a standard soffit plate, it requires a minimum frame reveal of 1-1/2" (38mm). Permits closer to clear up to a 5/8" (16mm) stop.

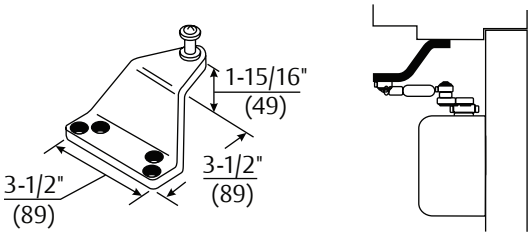

Extra-Clearance - 2018S Offset Soffit Plate:

For use where the need for additional clearance prevents use of the standard soffit plate. This plate mounts to the frame soffit to provide up to 2" (51mm) of clearance when a separate overhead door holder is used. Standard mounting requires a 2-5/8" (67mm) wide frame soffit. It may also be used where unusually high frame stops or weatherstripping prevent the use of other soffit plates.

8000 SERIES
ARCHITECTURAL DOOR CLOSER

PARALLEL ARM

Brackets for Non-Hold Open & Hold Open Arms

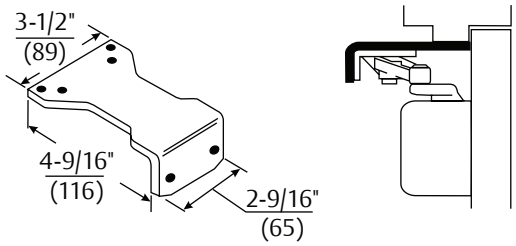

Parallel Hold Open - 1628H Adapter Plate:

Supplied standard with all parallel arm hold open closers. It can also be used to convert regular arm or top jamb hold open arms to parallel arm installation. It can be mounted where the frame soffit is as narrow as 1" (25mm).

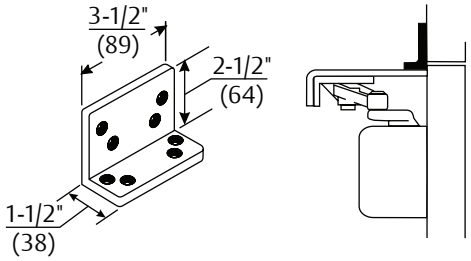

Flush Transom - 2022 Angle Bracket:

For use where rabbeted or flush transom conditions prevent installation of a soffit plate. Used in combination with the 1628H adapter plate, this bracket fastens to the overhead transom to provide a mounting surface for the soffit plate assembly.

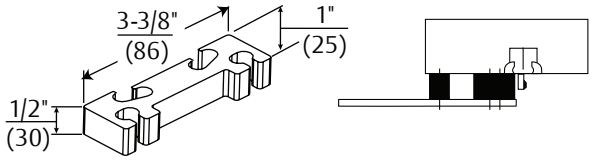

Clearance/Support Blade Stop - 6891 Spacer Block:

For use where the door frame has a blade stop and the soffit plate must be mounted on the frame rabbet. This accessory is used in combination with the standard spacer block to provide clearance of the blade stop. Also used with non-hold open arms.

PARALLEL RIGID, CLOSERPLUS & CLOSERPLUS SPRING ARMS

Closer Mounting Plate
Slim Line Installations

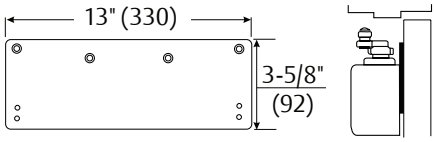

Narrow Top Rail - 8148 Drop Plate:

For use where a narrow top rail prevents the closer from being mounted directly to the door surface. This drop plate can be used to mount a closer on a top rail as narrow as 2-9/16" (65mm) in height.

Full Cover Installations

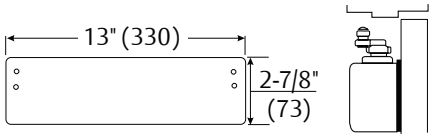

Exposed Back - 8445 Molded Full Cover Decorative Back Plate:

For use on doors with glass lights where a closer with molded full cover is installed and the closer back is exposed. This plate covers the back of the installation to give a pleasing appearance from the reverse side.

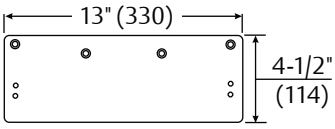

Exposed Back/Narrow Top Rail - 8158 Molded Full Cover Drop Plate:

For use on doors with glass lights where a closer with molded full cover is installed and the back of the closer is exposed. This covers the back of the installation and gives a pleasing appearance from the reverse side.

Metal Cover Installations

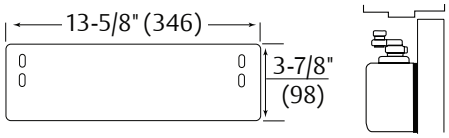

Exposed Back - 8545 Metal Full Cover Decorative Back Plate:

For use on doors with glass lights where a closer with full metal cover is installed and the back of the closer is exposed. This plate covers the back of the installation and gives a pleasing appearance from the reverse side.

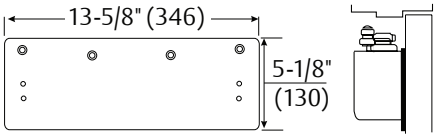

Exposed Back/Narrow Top Rail - 8548 Metal Full Cover Drop Plate:

For use on doors with glass lights where a closer with metal full cover is installed on a narrow top rail, and the back of the cover is exposed. This drop plate can be used to mount a closer on a top rail as narrow as 2-9/16" (65mm) in height. This plate covers the back of the installation and gives a pleasing appearance from the reverse side.

Architectural Plastic or Metal Cover Installations

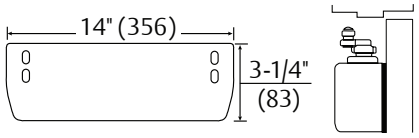

Exposed Back - 8545A Architectural Plastic or Architectural Metal Cover Decorative Back Plate:

For use on doors with glass lights where a closer with an architectural plastic or metal cover is installed and the closer back is exposed. This plate covers the back of the installation to give a pleasing appearance from the reverse side.

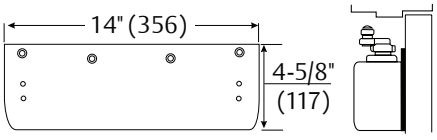

Exposed Back/Narrow Top Rail - 8548A Architectural Plastic or Architectural Plastic or Architectural Metal Cover Drop Plate:

For use on doors with glass lights where a closer with an architectural plastic or metal cover is installed on a narrow top rail, and the back of the cover is exposed. This drop plate can be used to mount a closer on a top rail as narrow as 2-9/16" (65mm) in height. This plate covers the back of the installation to give a pleasing appearance from the reverse side.

8000 SERIES
ARCHITECTURAL DOOR CLOSER

PARALLEL RIGID, CLOSERPLUS & CLOSERPLUS SPRING ARMS

Brackets for Non-Hold Open Arms & Hold Open Arms

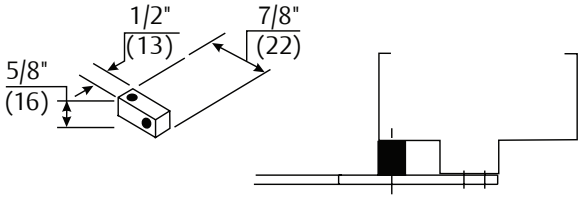

Standard - 2019S Spacer Block:

For use where a narrow frame soffit does not provide adequate support for the soffit plate. Supplied as standard with all parallel rigid arm closers.

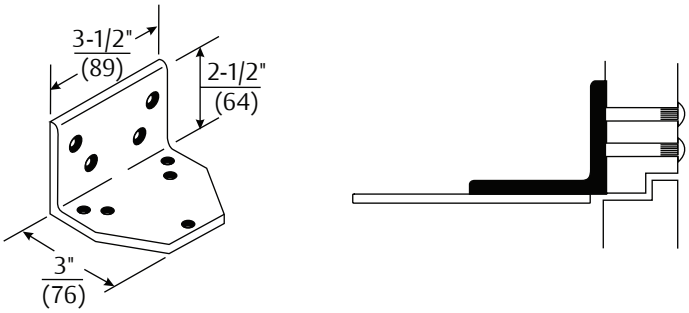

Flush Rabbeted Transom - 2019L Angle Bracket:

For use where flush transom conditions prevent mounting of the standard soffit plate. This bracket is used in combination with the standard soffit plate.

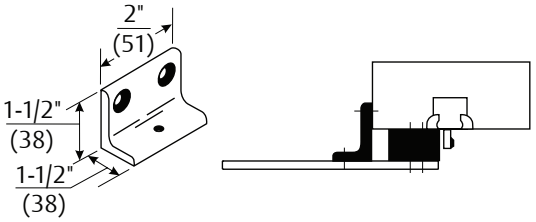

Narrow Frame - 6890 Support Bracket:

For use where the frame is narrow and the soffit plate cannot be mounted directly to the frame soffit or rabbet. Used in combination with the 6891 Spacer B lock on blade stop frames to provide extra support and needed clearance of the blade stop. Used on frames where the frame stop does not exceed 5/8" (16mm) in height.

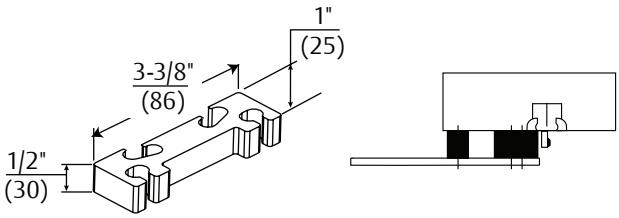

Clearance/Support Blade Stop - 6891 Spacer Block:

For use where the door frame has a blade stop and the soffit plate must be mounted on the frame rabbet. This accessory is used in combination with the standard spacer block to provide clearance of the blade stop.

UNITROL® ARM

Closer Mounting Plate Parallel Arm

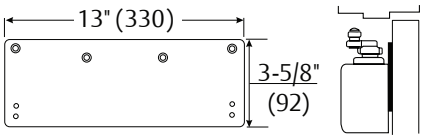

Narrow Top Rail - 8148 Drop Plate:

For use where a narrow top rail prevents the closer from being mounted directly to the door surface. This drop plate can be used to mount a closer on a top rail as narrow as 2-7/16" (62mm) in height.

Full Cover Installations

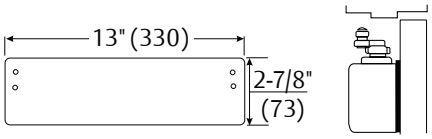

Exposed Back - 8445 Molded Full Cover Decorative Back Plate:

For use on doors with glass lights where a closer with molded full cover is installed and the closer back is exposed. This plate covers the back of the installation to give a pleasing appearance from the reverse side.

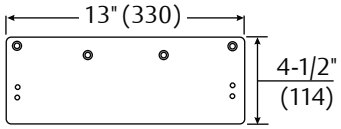

Exposed Back/Narrow Top Rail - 8158 Molded Full Cover Drop Plate:

For use on doors with glass lights where a closer with molded full cover is installed and the back of the closer is exposed. This covers the back of the installation and gives a pleasing appearance from the reverse side.

Metal Cover Installations

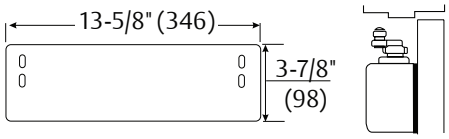

Exposed Back - 8545 Metal Full Cover Decorative Back Plate:

For use on doors with glass lights where a closer with full metal cover is installed and the back of the closer is exposed. This plate covers the back of the installation and gives a pleasing appearance from the reverse side.

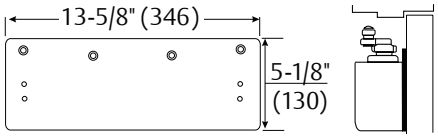

Exposed Back/Narrow Top Rail - 8548 Metal Full Cover Drop Plate:

For use on doors with glass lights where a closer with metal full cover is installed on a narrow top rail, and the back of the cover is exposed. This drop plate can be used to mount a closer on a top rail as narrow as 2-9/16" (65mm) in height. This plate covers the back of the installation and gives a pleasing appearance from the reverse side.

Architectural Plastic or Metal Cover Installations

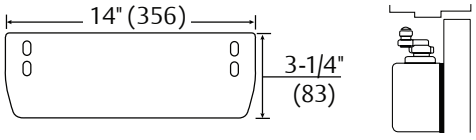

Exposed Back - 8545A Architectural Plastic or Architectural Metal Cover Decorative Back Plate:

For use on doors with glass lights where a closer with an architectural plastic or metal cover is installed and the closer back is exposed. This plate covers the back of the installation to give a pleasing appearance from the reverse side.

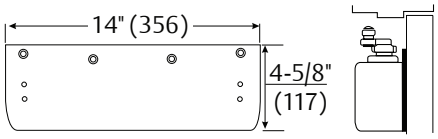

Exposed Back/Narrow Top Rail - 8548A Architectural Plastic or Architectural Plastic or Architectural Metal Cover Drop Plate:

For use on doors with glass lights where a closer with an architectural plastic or metal cover is installed on a narrow top rail, and the back of the cover is exposed. This drop plate can be used to mount a closer on a top rail as narrow as 2-7/16" (62mm) in height. This plate covers the back of the installation to give a pleasing appearance from the reverse side.

8000 SERIES
ARCHITECTURAL DOOR CLOSER

UNITROL® ARM

Soffit Plate Reinforcing Brackets (for Parallel Arm)

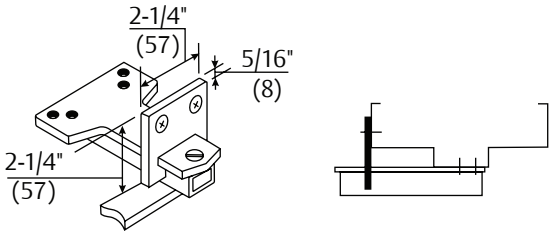

Additional Support - 6190 Reinforcing Bracket:

Standard for use with all parallel arm Unitrol door controls. Provides additional support to the soffit plate on installations with door frame reveals from 1-7/8" to 4-5/8" (48 to 117mm).

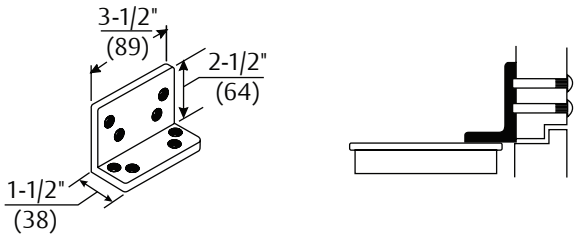

Flush Rabbeted Transom - 2022 Angle Bracket:

Optional for use with all parallel arm Unitrol door controls. For use where rabbeted or flush transom conditions prevent installation of the soffit plate assembly. This bracket fastens to the overhead transom to provide a mounting surface for the soffit plate assembly.

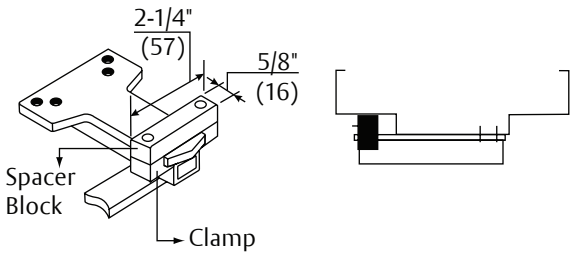

Wide Frame - 6191 Reinforcing Kit:

Optional for use with all parallel arm Unitrol door controls. Used to support the soffit plate on installations with wide frames. Clamps may be used with or without the spacer block, depending on frame conditions.

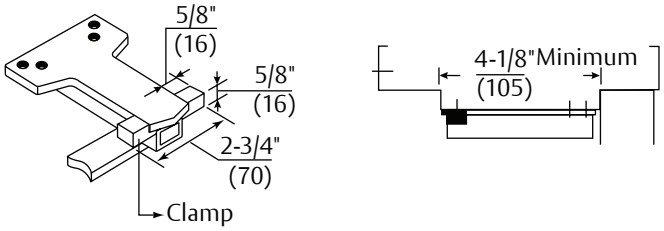

UNITROL® ARM

Closer Mounting Plate Top Jamb

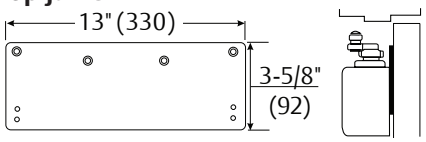

Narrow Top Rail - 8148 Drop Plate:

For use where a narrow top rail prevents the closer from being mounted directly to the door surface. This drop plate can be used to mount a closer on a top rail as narrow as 2-7/16" (62mm) in height.

Full Cover Installations

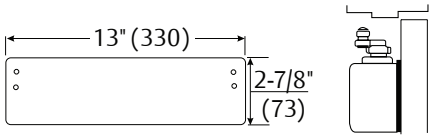

Exposed Back - 8445 Molded Full Cover Decorative Back Plate:

For use on doors with glass lights where a closer with molded full cover is installed and the closer back is exposed. This plate covers the back of the installation to give a pleasing appearance from the reverse side.

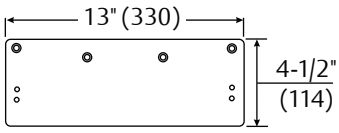

Exposed Back/Narrow Top Rail - 8158 Molded Full Cover Drop Plate:

For use on doors with glass lights where a closer with molded full cover is installed and the back of the closer is exposed. This covers the back of the installation and gives a pleasing appearance from the reverse side.

Metal Cover Installations

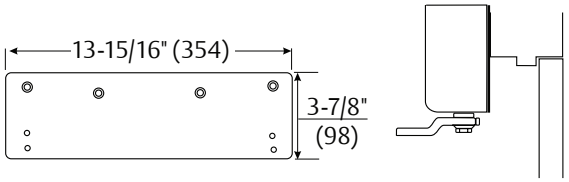

Low Ceiling Clearance - Overhead Door Holder - 8547 Metal Full Cover Drop Plate:

For use where a low ceiling clearance prevents normal top jamb mounting. This plate is used when the clearance is between 1-5/8" and 3-3/4" (41 and 95mm). Or for use where a surface or concealed overhead door holder prevents normal top jamb mounting of a closer with a metal full cover. This plate drops the closer and allows arm mounting screws to clear the bottom of the door holder. This places the centerline of the arm mounting screws at 3-7/8" (98mm) from the top of the door.

Architectural Plastic or Metal Cover Installations

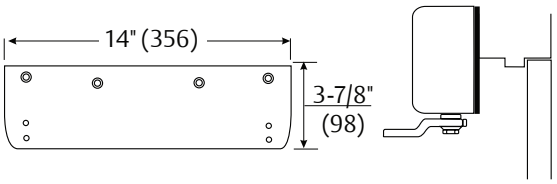

Low Ceiling Clearance - Overhead Door Holder - 8547A Architectural Plastic or Architectural Metal Cover Drop Plate:

For use where low ceiling clearance prevents normal top jamb mounting. This plate is used when the clearance is between 1-5/8" and 3-3/4" (41 and 95mm). Or for use where a surface or concealed overhead door holder prevents normal top jamb mounting of a closer with an architectural plastic or metal full cover. This plate drops the closer and allows arm mounting screws to clear the bottom of the door holder. This places the centerline of the arm mounting screws at 3-7/8" (98mm) from the top of the door.

NORTON RIXSON

ASSA ABLOY

8000 SERIES
ARCHITECTURAL DOOR CLOSER

DOOR CLOSER BODY ASSEMBLIES

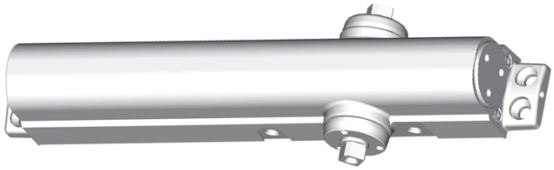

Model Number	Description
8101LAP	Multi-sized closer bodies (8101, 8301 or 8501)

LAP = Less All Parts

Closer Series	Plastic	Metal	Arch. Plastic	Arch. Metal
8301	8200P	N/A	N/A	N/A
8501	8400P	8400M	8400A	8400MA

Cover Model	Cover Drawing
Slim Line* 8200P or 8200PG 1-3/4" high x 2-1/8" deep x 13" long (44 x 54 x 330)	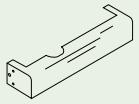
Full Plastic 8400P or 8400PG 2-7/8" high x 2-1/8" deep x 13" long (73 x 54 x 330)	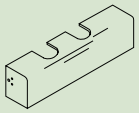
Full Metal 8400M 3-7/8" high x 2-3/16" deep x 13-5/8" long (98 x 54 x 346)	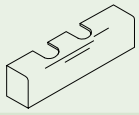
Architectural Plastic 8400A or 8400AG 3-3/32" high x 2-1/4" deep x 13-7/8" long (79 x 56 x 352)	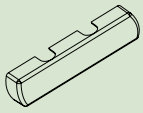
Architectural Metal 8400MA 3" high x 2-3/16" deep x 13-15/16" long (76 x 56 x 354)	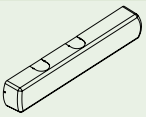

*The 1639 pinion cap is NOT included with the 8200P or 8200PG covers. The cap is included with the complete closer package (8300, 8301).

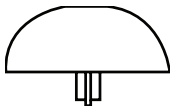

STEEL DOOR APPLICATION

Sleeve-nut : "SN" (4 per pack) or
Sleeve-nut & Screw: "SNB" (4 per pack)

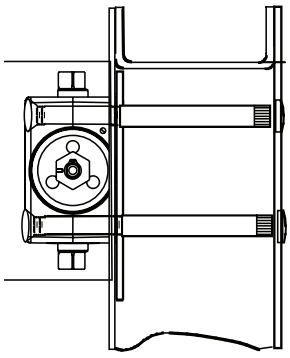

Door	SN's	SNB's
1-3/4"	SN-134	SNB134-38
2"	NA	SNB200-38
2-1/4"	SN-214	SNB214-38
S.S. SNB'S 1-3/4"	SN-134SS	SNB134SS-38

ALUMINUM AND WOOD DOOR APPLICATION (ALUMINUM DOOR SHOWN)

Thru Bolt & Grommet Nut : "TBGN" (4 per pack)

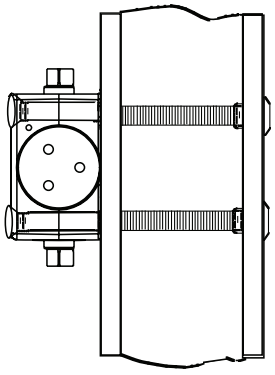

Door	SN's
1-3/8"	TBGN138-38
1-3/4"	TBGN134-38
2-1/4"	TBGN214-38

Arm Type	Torx® Screw Packs
Regular, Parallel & Top Jamb	TX38
Parallel Rigid, CloserPlus® & CloserPlus Spring™	PRTX38
Regular Rigid Heavy-Duty	RTX38
Unitrol®	UNITX38
Slide Track	STTX38

NON-HOLD OPEN ARM ASSEMBLIES

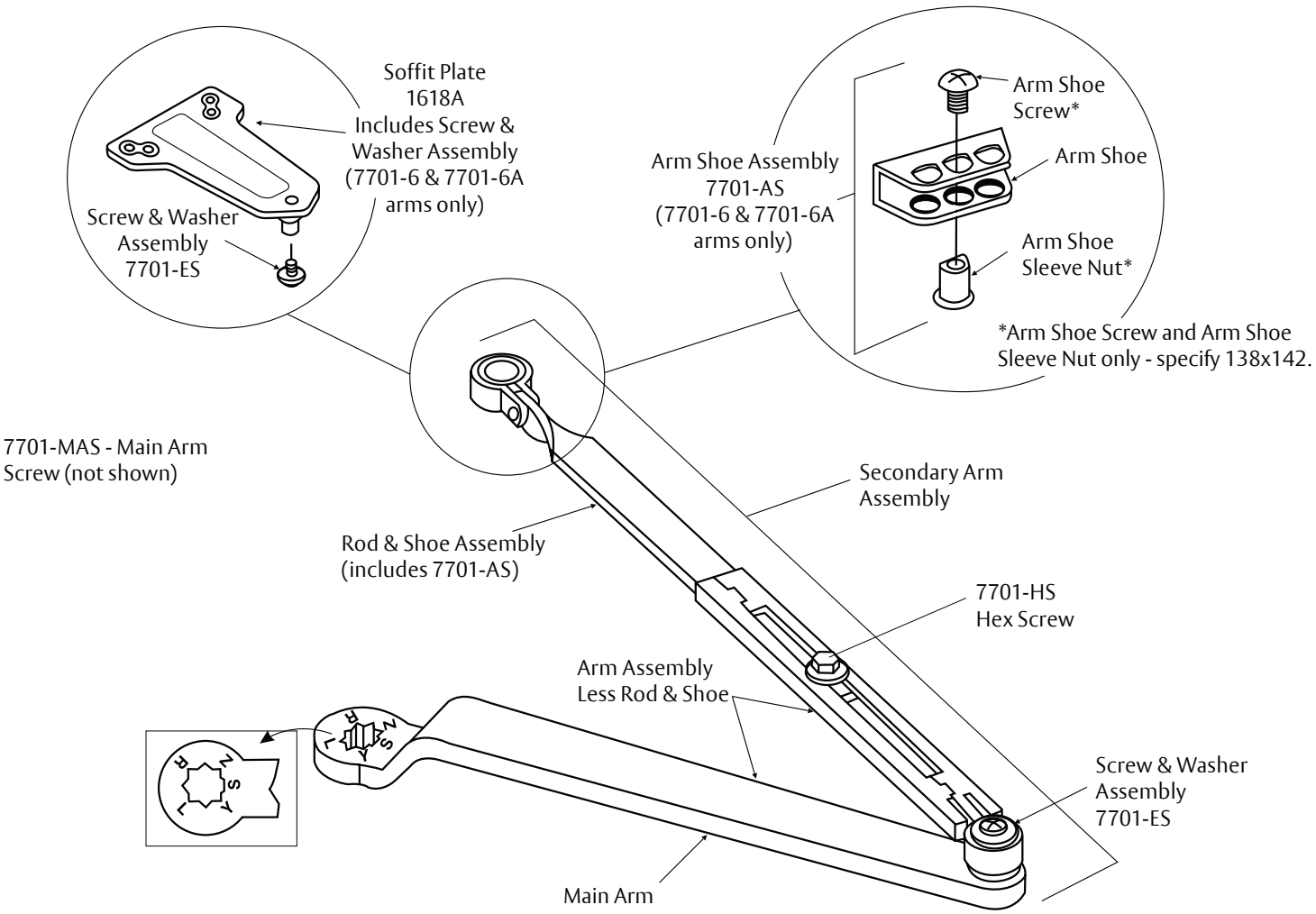

Note: Mounting hardware included with all parts orders.

Closer Series	Complete Arm Assembly	Main Arm Assembly[1] (length)(mm) (includes 7701-ES)	Secondary Arm Assembly (includes 7701-ES)	Arm Assembly Less Rod and Shoe	Rod & Shoe Assembly[2] (length)(mm)
8000	7701-1	7701-1M (11)(279)	7701-111	7701-1W	7701-11 (8-7/8)(225)
J8000	7701-1A		7701-121		7701-11A (12-9/16)(319)
P8000	7701-6		7701-116		7701-16 (8-7/8)(225)
P8000[3]	7701-6A		7701-116A		7701-16A (12-9/16)(319)
7500	7701-26 (tri pack includes 7701-1 plus 1618A plate)	1. C to C length shown in parentheses. 2. C of connecting link to end of rod shown in parentheses. 3. For 180° door swing when using a special template for doors hung on 6" to 8" (162 to 203mm) wide throw hinges.			

NORTON RIXSON

ASSA ABLOY

8000 SERIES
ARCHITECTURAL DOOR CLOSER

HOLD OPEN ARM ASSEMBLIES

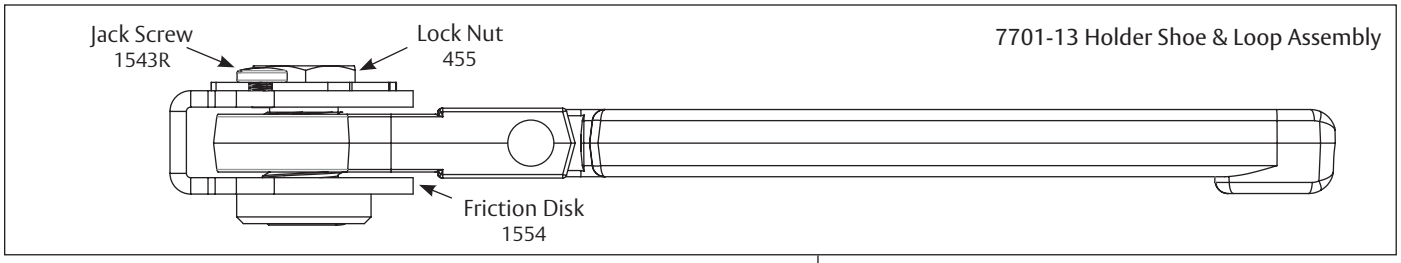

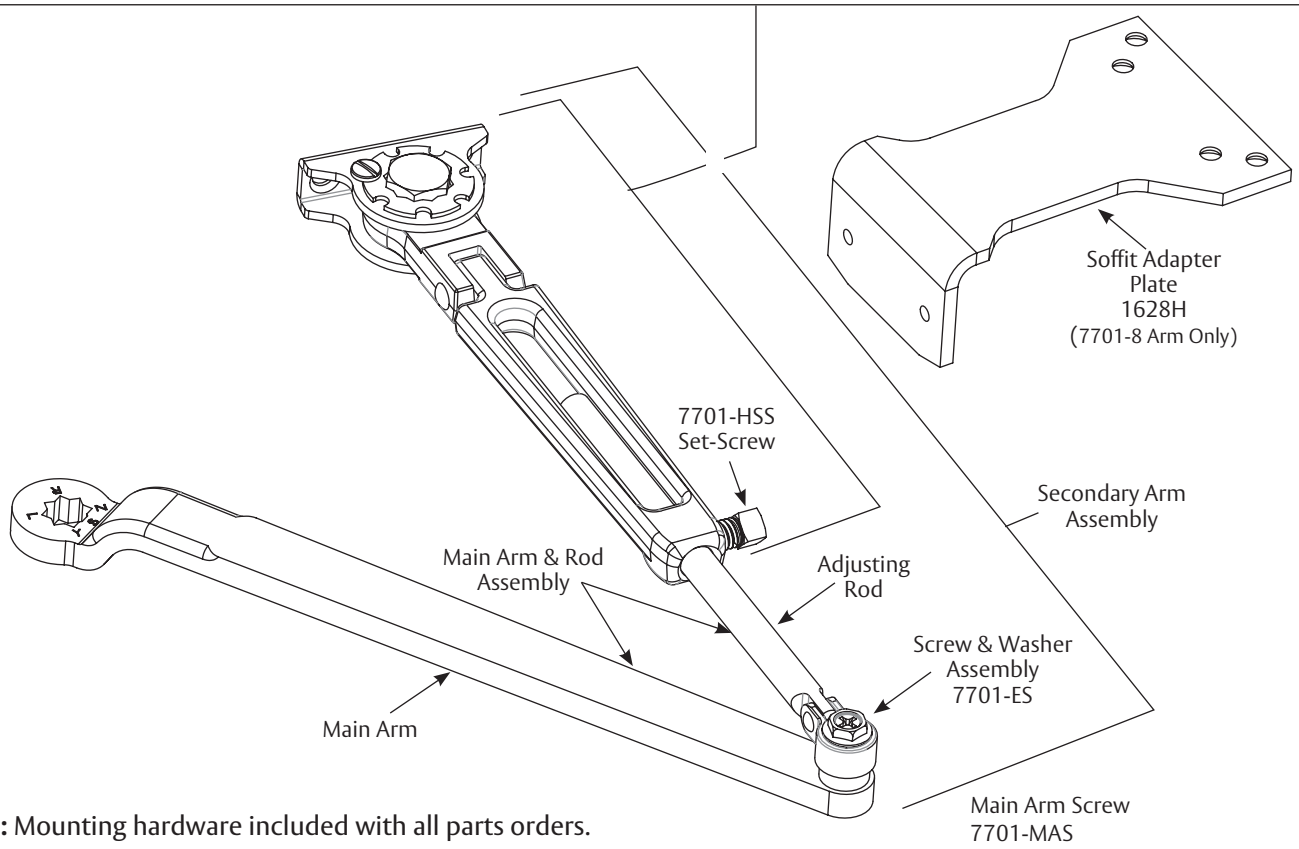

Note: Mounting hardware included with all parts orders.

Closer Series	Complete Arm	Main Arm Assembly[1] (mm) (includes 7701-ES)	Secondary Arm (includes 7701-ES)	Main Arm & Rod Assembly	Holder Shoe & Loop Assembly	Adjusting Rod[2] (Length)(mm)
8000H	7701-3/7701-8[3]	7701-1M (11)(279)	7701-113/7700-118 (Reg.) / (Par.)	7701-3W	7701-13/7701-18[4]	7701-31 (7-3/8)(187)
J8000H	7701-3A		7701-123	7701-3WA	7701-13	7701-31A (10-13/16)(275)

1. C to C length shown in parentheses.
2. C of connecting link to end of rod shown in parentheses.
3. Same as 7701-3 but includes 1628H soffit adapter plate.
4. Same as 7701-13 but includes 1628H soffit adapter plate.

PARALLEL RIGID ARM ASSEMBLIES

Non-Hold Open Arm Shown

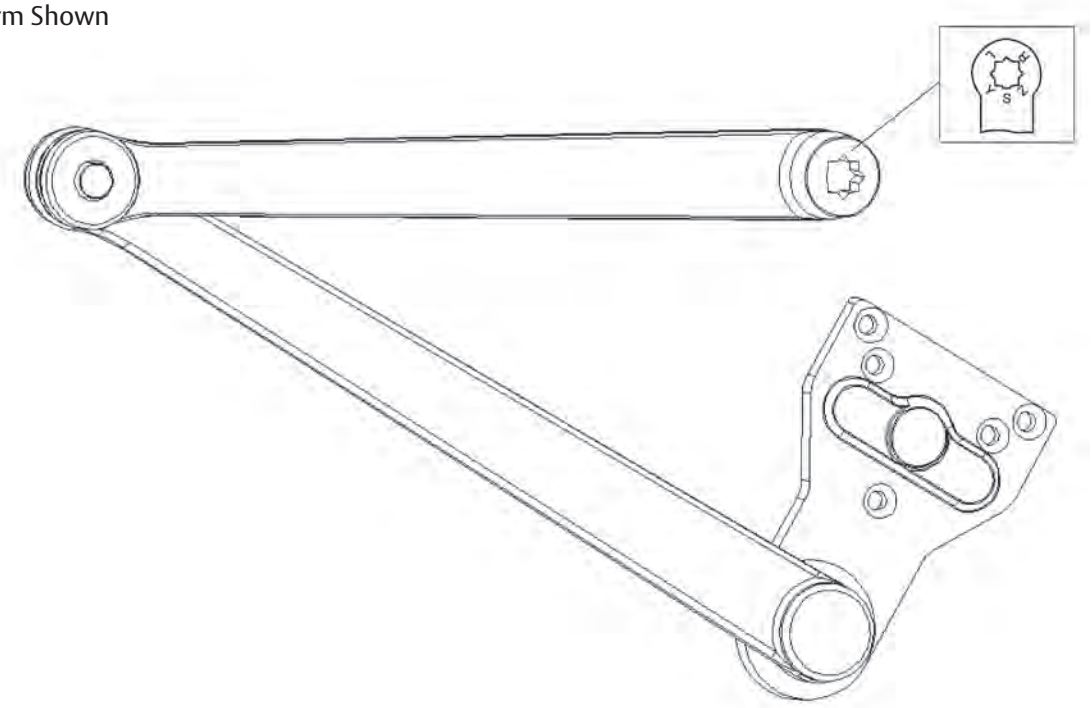

Hold Open Arms Only

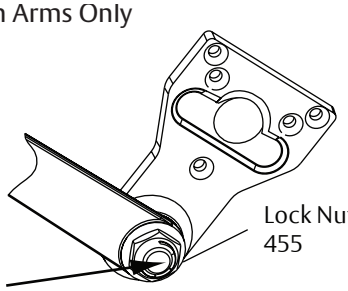

Note: Mounting hardware included with all parts orders.

Arm Function	Complete Arm Assembly
Non-Hold Open	PR7701-5
Hold Open	PR7701-8R (Right Hand)
	PR7701-8L (Left Hand)

NORTON RIXSON

ASSA ABLOY

8000 SERIES
ARCHITECTURAL DOOR CLOSER

CLOSERPLUS® ARM ASSEMBLIES

CLP
Non-Hold Open

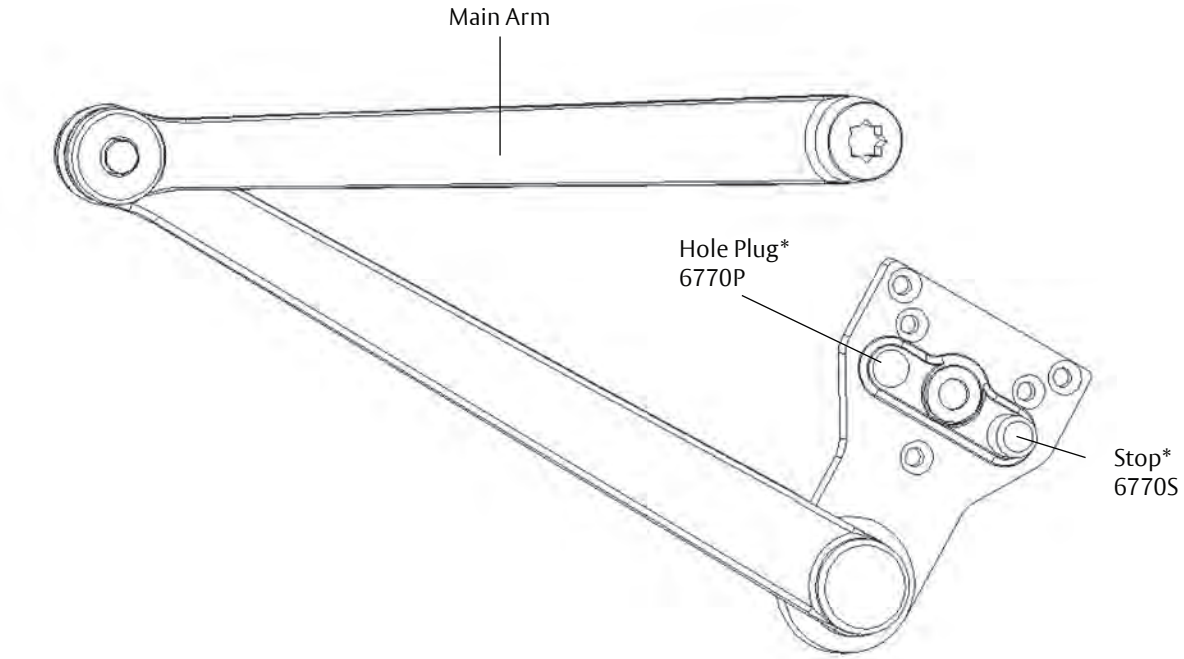

CLP-T
Thumbturn Hold Open

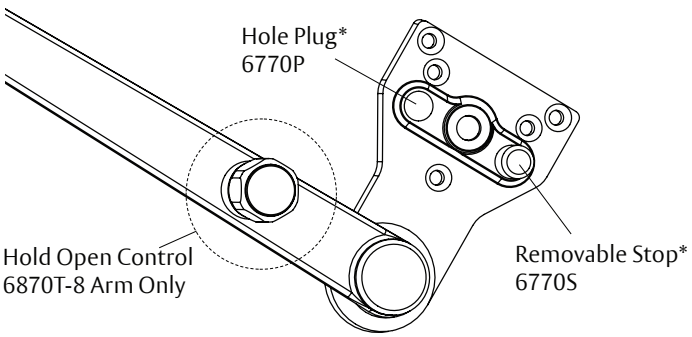

CLP-R
Ramp Hold Open

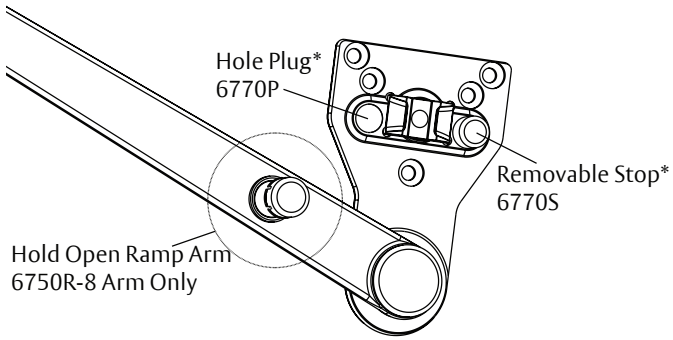

Note: Mounting hardware included with all parts orders.

Arm Function	Complete Arm Assembly
Non-Hold Open	6770-5
Thumbturn Hold Open	6870T-8
Ramp Hold Open	6750R-8

* These parts and screw pack are included with complete arm assemblies.

CLOSERPLUS SPRING™ ARM ASSEMBLIES

Non-Hold Open Arm Shown

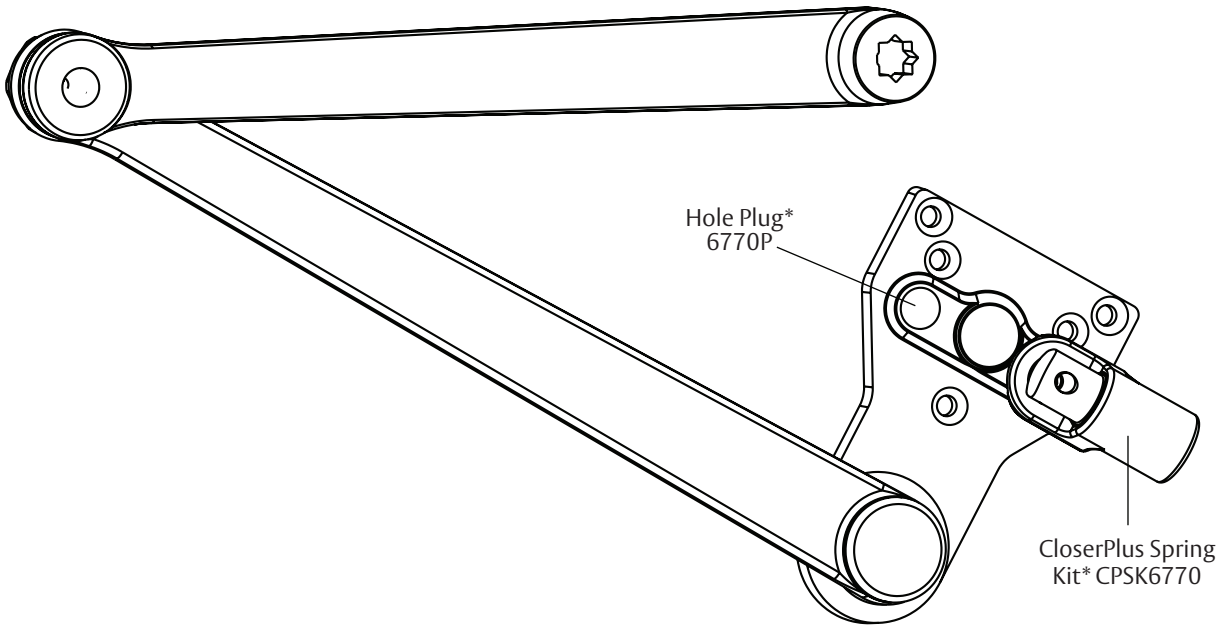

Note: Mounting hardware included with all parts orders.

Arm Function	Complete Arm Assembly
Non-Hold Open	CPS6770-5
Thumbturn Hold Open	CPS6870T-8

* These parts and screw pack are included with complete arm assemblies.

8000 SERIES
ARCHITECTURAL DOOR CLOSER

REGULAR RIGID HEAVY-DUTY ARMS

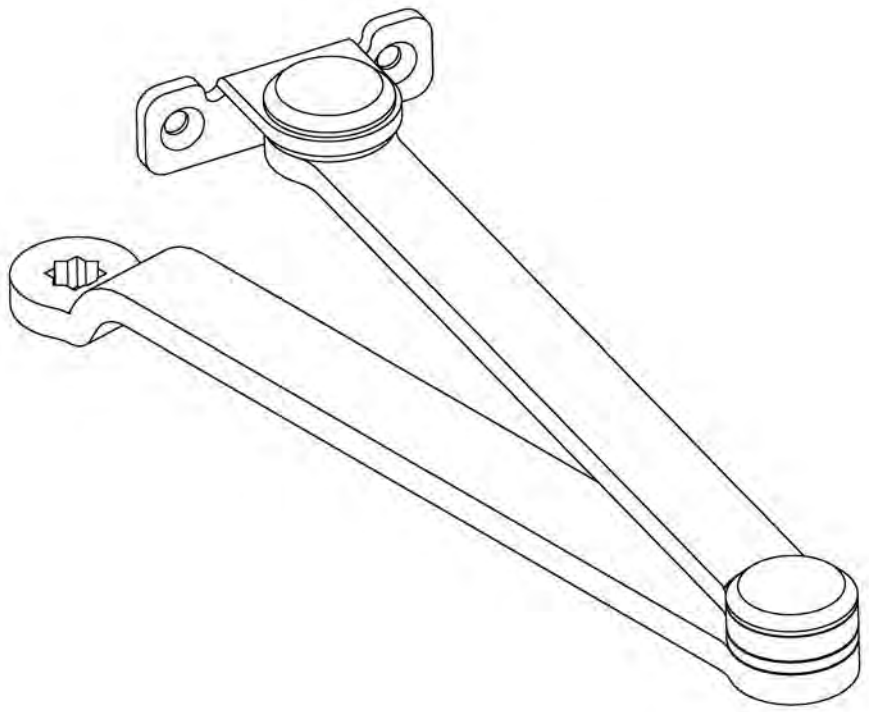

Note: Mounting hardware included with all parts orders.

Arm Function	Complete Arm Assembly
Non-Hold Open	R7701-1

PARALLEL RIGID OFFSET ARM ASSEMBLIES

Non-Hold Open

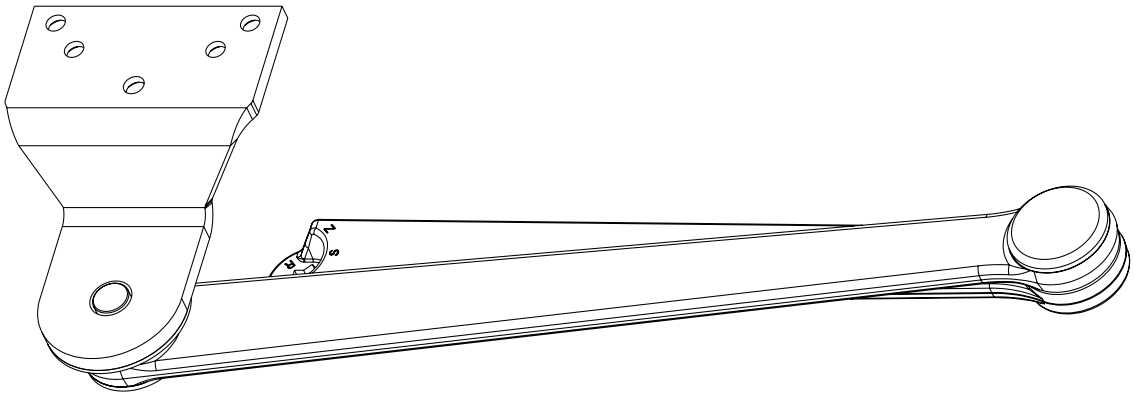

Side View

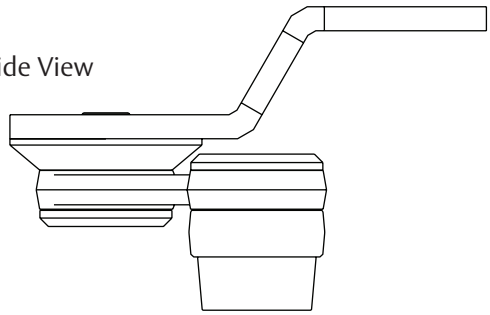

Note: Mounting hardware included with all parts orders.

Arm Function	Complete Arm Assembly
Non-Hold Open	PRO7701-5
Hold Open, Right Hand	PRO7701-8R
Hold Open, Left Hand	PRO7701-8L

8000 SERIES
ARCHITECTURAL DOOR CLOSER

UNITROL® ARM ASSEMBLIES

Parallel Arm

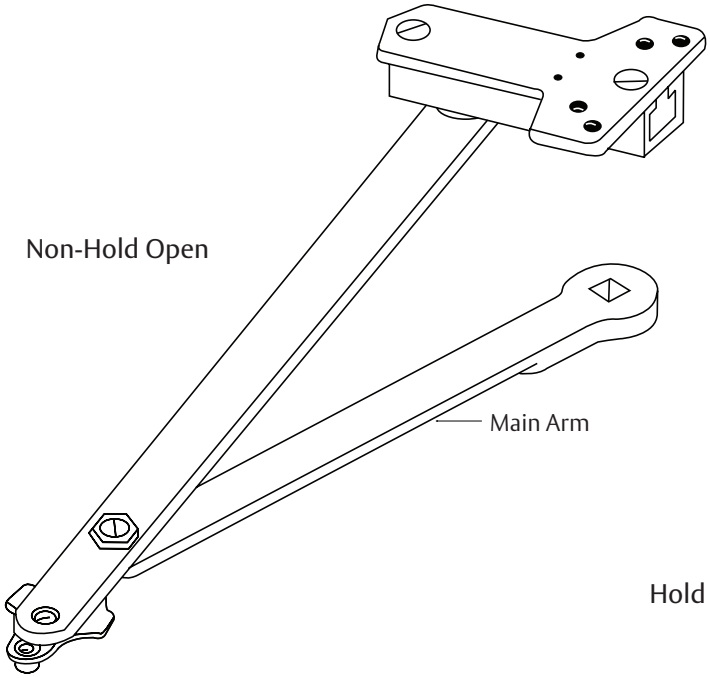

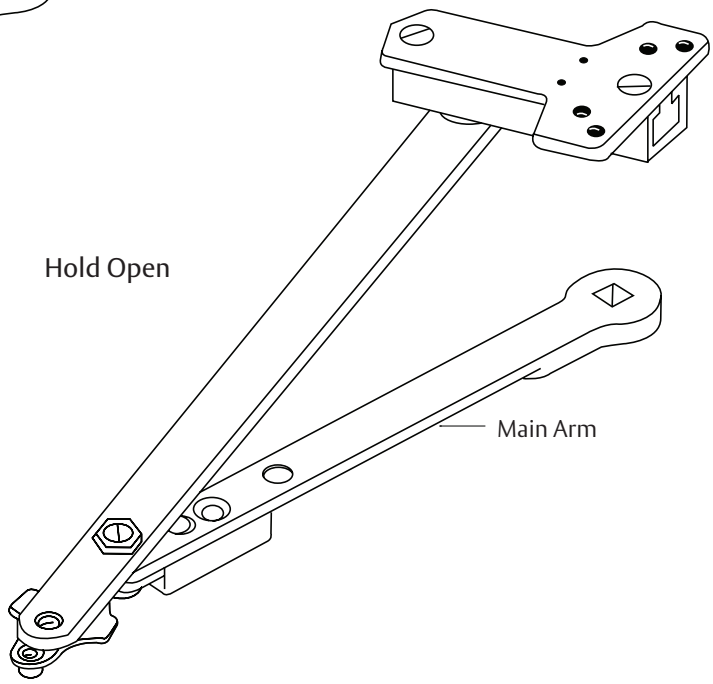

Note: Mounting hardware included with all parts orders.

Door Width (cm)	Main Arm Length* (mm)	Complete Arm Assembly	
		Non-Hold Open	Hold Open
28" - 32" (71- 81)	9-1/2" (241)	6100-11	6100-1
33"- 41" (84 - 104)	11" (279)	6100-13	6100-3
42" - 48" (107 - 122)	12-1/2" (318)	6100-14	6100-4

* Center to center length.
Only available in painted finishes.

UNITROL® ARM ASSEMBLIES

Top Jamb

Non-Hold Open

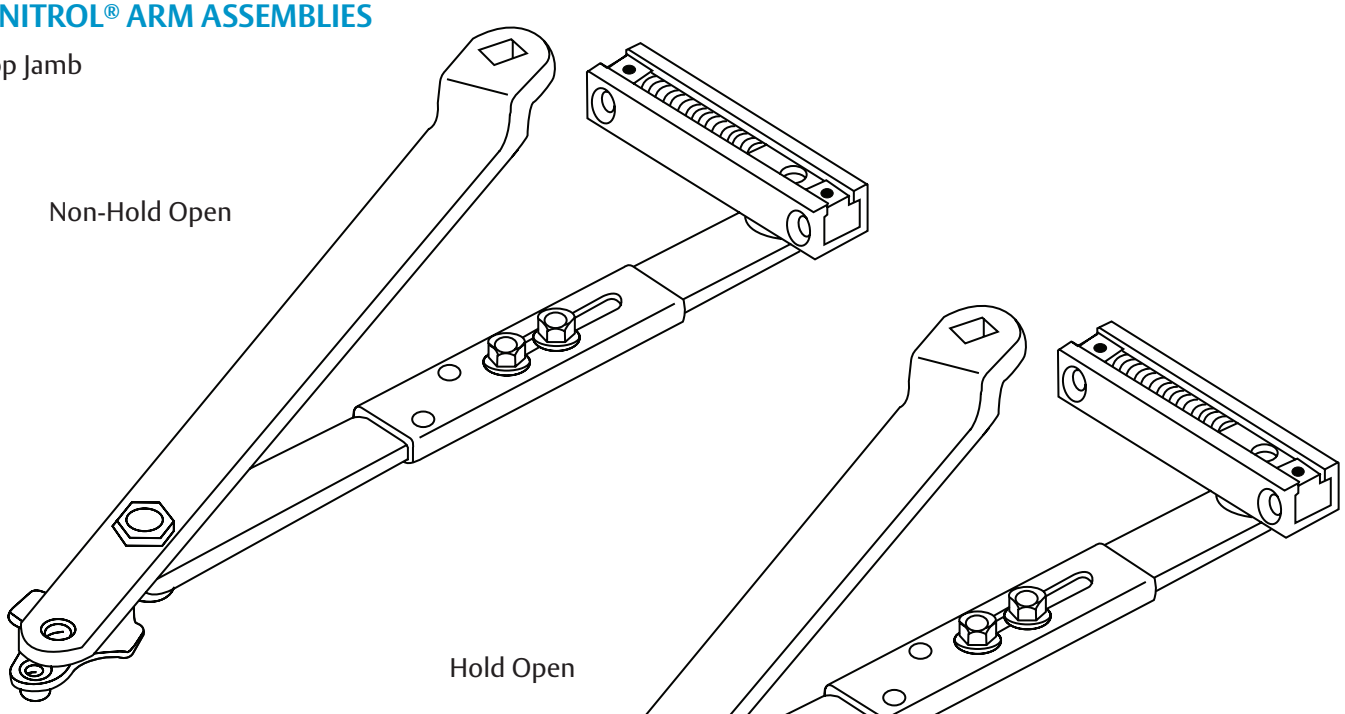

Hold Open

Note: Mounting hardware included with all parts orders.

Complete Arm Assembly		For Frame Reveals (mm)
Non-Hold Open	Hold Open	
J6100-4	J6100-7	2-1/8" - 3-1/4" (54 - 83)
J6200-4	J6200-7	1/2" - 2" (13 - 51)
J6400-4	J6400-7	3-3/8" - 4-1/4" (86 - 108)
J6500-41	J6500-71	4-3/8" - 5-3/8" (111 - 137)
J6500-42	J6500-72	5-1/2" - 6-3/8" (140 - 162)
J6500-43	J6500-73	6-1/2" - 7-3/8" (165 - 187)
J6600-4	J6600-7	0" - 3/8" (0 - 10)

Only available in painted finishes.

NORTON RIXSON

ASSA ABLOY

8000 SERIES
ARCHITECTURAL DOOR CLOSER

LOW PROFILE ARM ASSEMBLIES

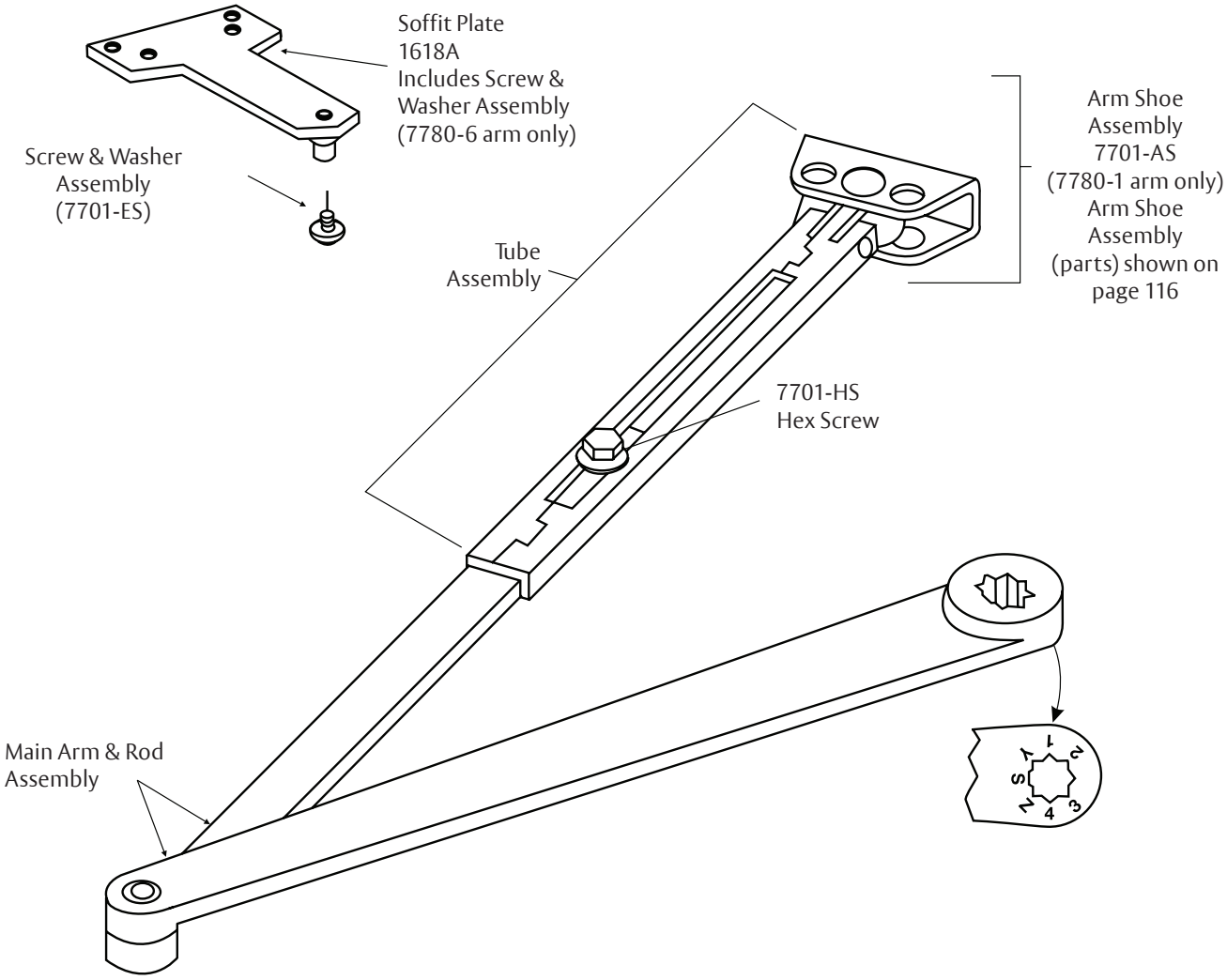

Note: Mounting hardware included with all parts orders.

Arm Application	Complete Arm Assembly	Main Arm & Adjusting Rod Assembly	Tube & Shoe/Soffit Assembly
Regular Arm	7780-1	7780-1MR	7780-1TS (With 7701-AS)
Parallel Arm	7780-6		7780-6TS (With 1618A)
Tri-pack	7780-26		

TRACK & ARM ASSEMBLIES

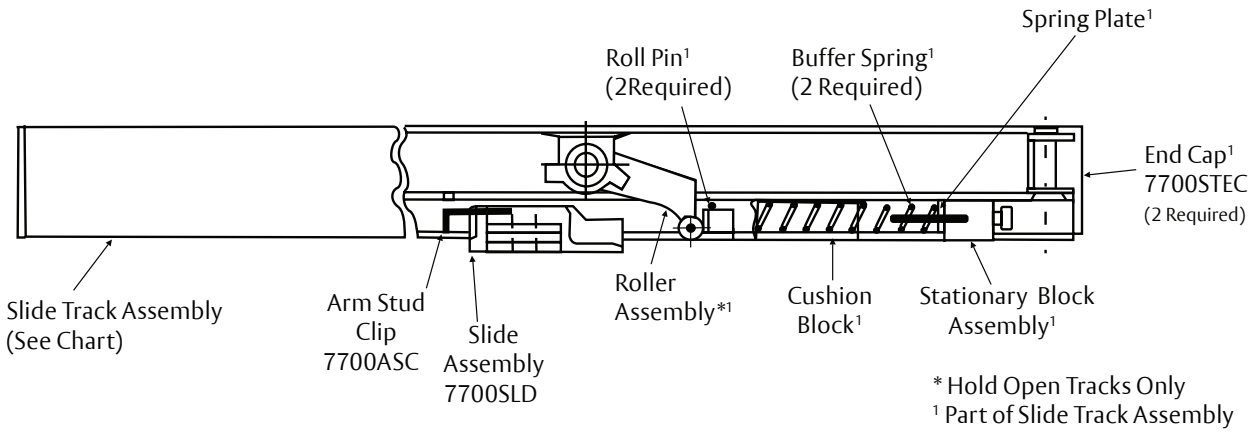

Note: Mounting hardware included with all parts orders.

Slide Track Assembly	Part Number	
Description	Non-Hold Open	Hold Open
Pull-side	7701ST-1T	7701ST-3T
Pull Side (180°)	7701ST-1T180	N/A
Push Side	7701ST-5T	7701ST-8T

8000 SERIES
ARCHITECTURAL DOOR CLOSER

TRACK & ARMS ASSEMBLIES

Standard Arm Assembly

7701ST-1A*[1]

Arm Tube Assembly
7701ST-1AT[1]

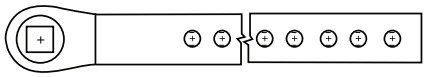

Adjusting Rod Assembly
7701ST-1AR[1]

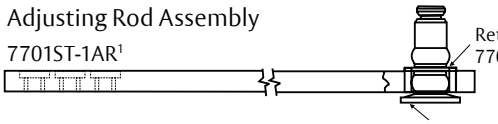

Double Egress Arm Assembly

7701PT-DE-1R (Right Hand)*[1]
7701PT-DE-1L (Left Hand)*[1]

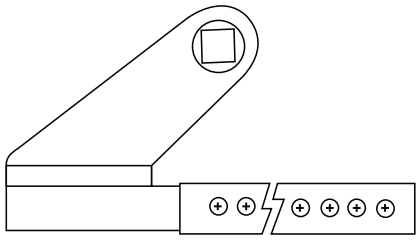

Arm Tube Assembly
7701ST-1ATR[1] (right hand)
7701ST-1ATL[1] (left hand)

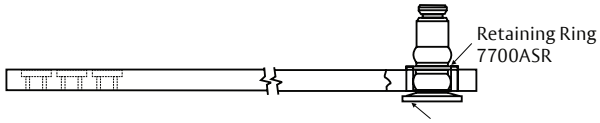

Adjusting Rod Assembly
7701ST-1AR[1]

TRACK ASSEMBLIES - SHALLOW DEPTH

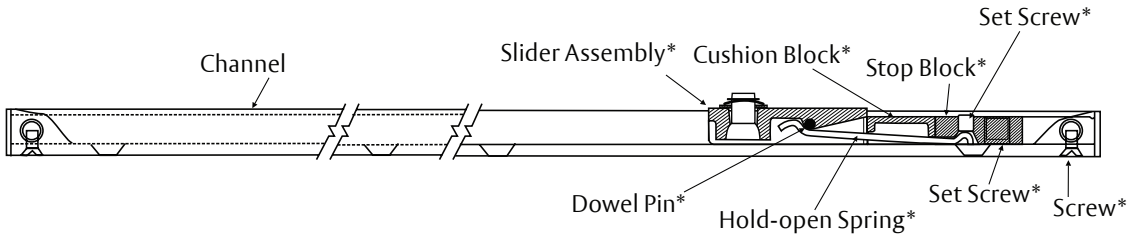

*Part of an Assembly Pack
NHo = 7740SLD
Ho = 7740HSLD

Note: Mounting hardware included with all parts orders.

Track Assemblies	Part Number	
Description	Non-Hold Open	Hold Open
Pull-side mounted	7740ST-1T	7740ST-3T
Push-side mounted	7740ST-5T	7740ST-8T

Arm Assembly

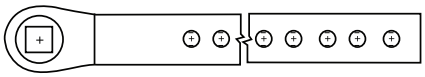

Arm Tube Assembly
7701ST-1AT[2]

7740ST-1A[1, 2]

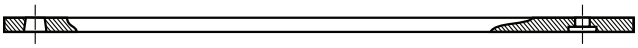

Adjusting Rod Assembly
7740ST-1AR[2]

1 Includes arm length adjusting screw.
2 Includes arm tube & adjusting rod assembly.

NORTON RIXSON

ASSA ABLOY

8000 SERIES
ARCHITECTURAL DOOR CLOSER

FASTENERS

Standard Fasteners	With Arms Specified Below					
	Regular Parallel & Top Jamb	Low Profile	Parallel Rigid (PR) CloserPlus (CLP) CloserPlus Spring (CPS)	Unitrol (UNI)	Unitrol-J (UNI-J)	Slide Track (ST)
Door						
Self Drilling Self Tapping	S	S	S	S		
Machine Screw	S	S	S	S	S	S
Sleeve Nut/Sex Nut			S	S	S	S
Frame						
Self Drilling Self Tapping	S	S	S	S	S	S
Machine Screw	S	S	S	S	S	S

S = Standard
Fasteners are standard (included) with closer package.
Examples:
8501 includes self drilling, self tapping and machine screws
PR8501 includes self drilling, self tapping, machine screws and sleeve nut/sex nuts

Optional Fasteners	Description	With Arms Specified Below					
		Regular Parallel & Top Jamb	Low Profile	Parallel Rigid (PR) CloserPlus (CLP) CloserPlus Spring (CPS)	Unitrol (UNI)	Unitrol-J (UNI-J)	Slide Track (ST)
Door							
SN^	Sleeve Nut/Sex Nut	O	O				
TBGN^	Thru Bolts & Grommet Nuts	O	O	O	O	O	O
SMS*	Sheet Metal Screws & Machine Screws	O	O	O	O	O	O
SSPxSMS	Standard Screw Pack & Sheet Metal Screws	O	O	O	O	O	O
TORX®*	Torx Drive Security Screw	O	O	O	O	O	O
Frame							
SMS*	Sheet Metal Screws & Machine Screws	O	O	O	O	O	O
SSPxSMS	Standard Screw Pack & Sheet Metal Screws	O	O	O	O	O	O
TORX®*	Torx Drive Security Screw	O	O	O	O	O	O

O = Optional
^ When SN or TBGN are ordered, standard screw packs are also furnished.
***When SMS or TORX screws are specified, standard screw packs ARE NOT furnished.**
Examples:
8501 x **SN** includes self drilling, self tapping, machine screws and sleeve/sex nuts
8501 x **SMS** includes sheet metal screws and machine screws

SN are for use on hollow metal doors and can also be used for thru bolting on wood doors. When selected SNs are supplied for 1-3/4" (44mm) thick doors unless specified for 2-1/4" (57mm) thick doors

TBGN are an alternative to SN for wood doors. When selected, TBGNs are supplied standard for 1-3/4" (44mm) thick doors. They can be specified for 2-1/4" (57mm) thick doors.

SMS - when the option is specified, closer will be packed with sheet metal screws for the door and sheet metal screws plus machine screws for the frame.

FINISHES

Norton Rixson offers waterborne acrylic, polyster powder coat and plated finishes. Custom finishes are available on special order. A sample and approval is required.

Waterborne acrylic and polyester powder coat will withstand 100 hours of salt spray (ANSI requires 25 hours).

Specify BHMA Designation	Description
600[1]	Prime Coat
605[2]	Bright Brass
606[2]	Satin Brass
611[2]	Bright Bronze
612[2]	Satin Bronze
613E	Dark Oxidized Satin Bronze - Equivalent
619[2]	Satin Nickel
625[2]	Bright Chrome
626[2]	Satin Chrome

Specify BHMA Designation	Description	Complements the following finishes
689	Aluminum	628, 625, 629, 630, 651, 652
690	Statuary Bronze	640, 613
691	Dull Bronze	612, 637, 639
693	Black	315
694	Medium Amber	313
696	Gold	605, 606, 632, 633
BSP	Black Suede Powder	
WSP	White Suede Powder	

1 600 is a special rust-inhibiting prime coat. Closers can be ordered prime coat only (specify closer x 600). An additional charge applies if finish coat is required over prime coat.

2 Plated finish

- Closer bodies and plastic covers are available in waterborne acrylic finishes. Arms and metal covers are available in powder coat or plated finishes.
- When a plated finish is ordered, arm and cover will be plated unless "cover only" is specified.

NORTON RIXSON

ASSA ABLOY

8000 SERIES
ARCHITECTURAL DOOR CLOSER

HOW TO ORDER

For optimum protection of door and frame assemblies, always use auxiliary wall, floor, or overhead door stop.

CLP	8	5	0	1	T
Prefixes	**First Digit** Defines Closer Series	**Second Digit** Specifies Cover Options	**Third Digit** Specifies Some Options	**Fourth Digit** Specifies Closer Size	**Suffixes**

Appearance Options
- **1 -** without cover
- **3 -** closer with Slim Line cover
- **5 -** closer with Full cover

1 - Adjustable 1-6

No Prefix- 8301/8501 series designates Tri-Style®
- **S -** 8301/8501 regular arm application only, non-hold open
- **JS -** 8301/8501 top jamb application only, non-hold open
- **P -** 8301/8501 parallel arm application only, non-hold open 8381/8581 low profile closer
- **J -** Top Jamb installation. 2-3/4 to 7" reveal - 150° swing
- **PR -** Parallel rigid arm (parallel arm only - specify hand for hold open functions)
- **PRO -** Parallel rigid arm with offset soffit plate (parallel arm only - specify hand for hold open applications)
- **PS -** For push side mounted slide track only
- **R -** Regular rigid heavy-duty arm (Torx® screws not included)
- **CLP -** CloserPlus® arm (parallel arm only)
- **CPS -** CloserPlus Spring™ arm (parallel arm only)
- **UNI -** Unitrol® arm (parallel arm only - specify door width)
- **UNIJ -** Unitrol arm (top jamb only - specify frame reveal)

- **0 -** Specifies standard type arms for non-hold open, hold open closers
- **4 -** Specifies low profile slide track
- **8 -** Specifies a low profile arm for non-hold open closers only

- **No Suffixes -** Standard non-hold open arm
- **H -** Standard hold open arm
- **M -** Metal cover; optional for series 8501 closers only (Specify hand for Top Jamb closer)
- **MLL -** Lead lined metal cover
- **A -** Optional Architectural Plastic cover (8501 only)
- **MA -** Optional Architectural Metal cover (8501 only)
- **T -** Thumbturn hold open on CloserPlus (CLP) & CloserPlus Spring (CPS) arms
- **DA -** Adjustable delayed action closing optional. Available with adjustable backcheck cushioning for all series
- **ST -** Slide track single lever arm (pull side standard. For push side prefix PS)
- **ST-180 -** Slide track single lever (pull side only); 180° swing
- **DE -** Pull side slide track arm for double egress frame with reveal (Handed)
- **G -** ABS cover
- **R -** Ramp hold open on CloserPlus® arm

Note:
- Before installing a door closer, verify the accessibility, fire, and life-safety requirements that are in effect. This includes the mounting height and projection into the clear opening. Check the adopted state and local building codes and consult the Authority Having Jurisdiction (AHJ)
- To maintain the warranty and ensure proper operation of the product, follow the installation instructions & templates and install on the inside of the building.
- Consult NFPA 80 for the hinge requirements on a fire door.
- Failure to use fasteners supplied with closer may void factory warranty.
- Optional fasteners are available for a variety of applications. Consult the door and frame manufacturer to ensure the proper fasteners are used to maintain certifications.
- Sizing charts are based on 1-3/4" x 7' standard weight doors swinging to 110°. Other application conditions (e.g. larger door heights or weight) may require larger size closer. Adjusting the spring power to meet the low opening force requirements of the Americans With Disabilities Act or ANSI/BHMA Standard A117.1, may not provide adequate closing power to dependably close and latch the door in some conditions (i.e. air movement from wind gusts or building stack pressure).

NORTON RIXSON

ASSA ABLOY

1600 SERIES
ALUMINUM STOREFRONT DOOR CLOSER

INTRODUCTION

The 1600 Series door closers offer proven quality, performance and reliability unmatched by the competition. A staple in the industry, these ANSI/BHMA Grade 1 closers are designed for exterior or interior doors. A full complement of regular and heavy-duty arms, brackets and options make the 1600 Series closers ideal for virtually any medium traffic, commercial application.

FEATURES

- Exceeds 25 million cycles
- Non-handed
- Rack-and-pinion design
- Cast aluminum closer body
- 2-7/8" (73mm) projection
- 1-3/8" (35mm) diameter piston
- 5/8" (16mm) diameter pinion journals
- Tri-Style® packaging (regular arm, top jamb and parallel arm mounting)
- All standard arm applications allow doors to swing 180°, conditions permitting
- Staked valves
- Heavy-duty arms: Parallel Rigid, CloserPlus®, CloserPlus Spring™, and Unitrol®
- Standard, separate and independent, latch, sweep and backcheck intensity valves
- 30-year limited warranty

Features	1600BC	1601
Sized springs 3 or 4 with no power adjustment	X	
Adjustable spring sizes 1 through 6		X

OPTIONAL FEATURES

- Molded plastic cover - specify suffix P
- Corrosion-resistant model (non-hold open only) - specify 1601SS (not tri-packed)

Experience a safer and more open world

NORTON RIXSON

ASSA ABLOY

1600 SERIES
ALUMINUM STOREFRONT DOOR CLOSER

OVERVIEW

CUTAWAY VIEW

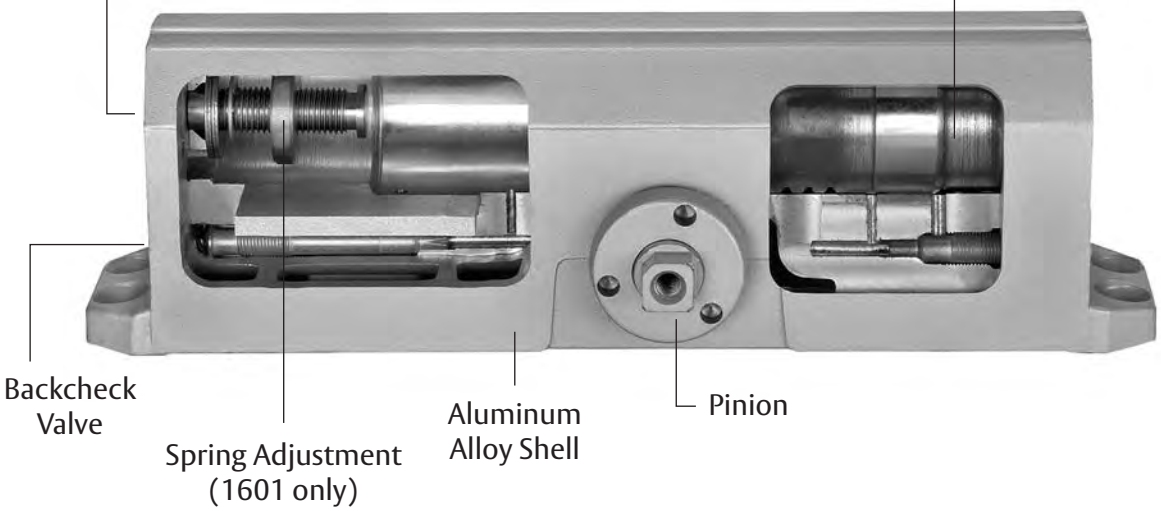

Spring omitted for illustration purposes

SIDE VIEW

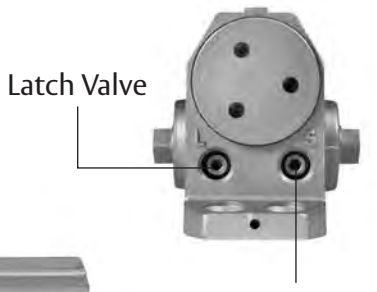

CERTIFICATIONS

- ANSI/BHMA A156.4, Grade 1 certified
- UL / cUL listed for use on fire rated doors
- UL10C listed for positive pressure fire test
- Manufactured in an ISO 9001 and ISO 14001 certified facility
- 1601 door closers are designed to comply with requirements for the Americans with Disabilities Act (A.D.A) and ANSI standard A117.1
- UL certification environmental product declaration

CAUTION: Door Closers for Low Opening Force Applications:

Door closers installed in openings required to meet the requirements of the Americans With Disabilities Act or ANSI/BHMA Standard A117.1, when adjusted to meet those requirements, may not provide adequate closing power to dependably close and latch the door based on opening or site conditions.

NORTON RIXSON

ASSA ABLOY

1600 SERIES
ALUMINUM STOREFRONT DOOR CLOSER

EXPLANATION OF FEATURES

Aluminum Alloy Housing
Closer bodies are constructed of a special aluminum alloy, carefully selected to accommodate interaction with steel components and operating conditions.

Rack & Pinion Operation
Provides a smooth constant control of the door through its full opening and closing cycle. 180° door swing can be achieved when door, frame, hardware and arm function do not limit door swing.

Non-Handed
With few exceptions, all series 1600BC and series 1601 door closers are non-handed and can be installed on either right- or left- hand swing doors. Pinion shaft extends vertically through the closer body in both directions. Some options (such as Parallel Rigid hold open arms) will require that the hand of the closer be specified.

Tri-Style®
1600BC/1601 closers come with screws, brackets & soffit plate to allow for regular, top jamb, & parallel arm installations.

Sweep Speed Control Valve
Allows adjustment of door speed from the door's full open position down to approximately 10° from the closed position.

Latch Speed Control Value
Allows adjustment of door speed from approximately 10° down to the door's fully closed position.

Adjustable Backcheck Cushion Valve
Provides control of the door in the opening cycle, beginning at approximately 75° of door opening. It slows/cushions the door opening, when the door is forcibly opened beyond its pre-adjusted opening speed limits.

Warranty
These closers carry a limited 30-year warranty against defects and a limited lifetime warranty on the aluminum housing.

Closer Fluid
NorGlide® door closer fluid is a specially formulated hydraulic fluid that contains lubricity and anti oxidation agents that provide optimum performance and efficiency. This fluid complements the interaction of the door closer's aluminum housing with its steel and zinc components, while maintaining stable viscosity to allow the door closer to perform in temperatures ranging from extremely high to as low as -40° F.

Door Closer Power Options
Sized Door Closer: 1600BC

Available in power sizes 3 or 4. Outlined in ANSI specification A156.4. Spring power is not adjustable.

Multi-Sized Door Closer: 1601

Adjustable through the power range of sizes 1 through 6 to comply with the opening force requirements as outlined in the Americans with Disabilities Act (A.D.A.) and ANSI A117.1 for interior doors. Outlined in ANSI specification A156.4.

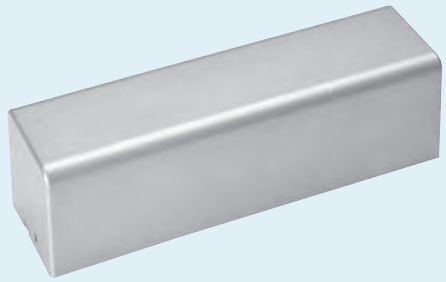

Optional Molded Cover - 1600P
Molded of high-impact U.L. listed material that covers the entire closer body assembly. This cover is non-handed for regular and parallel arm applications. Suffix "P" to catalog number. Not designed for top jamb applications.

Corrosion Resistant Door Closer
The series 1601SS door closers are available for use where corrosive conditions exist. This series is provided with zinc diecast adjustment valves, a 440 grade stainless steel pinion shaft, an all-aluminum body and bronze closer arm bushings; all other components and fasteners are of 302/303 grade stainless steel. This product is available for standard regular arm, top jamb and parallel arm, non-hold open, applications only. Not Tri-Style packed. "P" or "J" prefix required for parallel arm and top jamb applications.

Non-Hold Open
Self-closes door every time door is opened. Auxiliary stop (by others) required except when using the CloserPlus®, CloserPlus Spring™ or Unitrol® Arms.

Hold Open
Achieved by means of friction or ball and detent/roller. Friction hold open has a range of 90° to 180° using template location and mechanical adjustment. Ball and detent or roller hold open is effective in a range of 85° to 110°.

Hold open arm door closers are not permitted to be used on fire door assemblies.

Experience a safer and more open world

NORTON RIXSON

ASSA ABLOY

1600 SERIES
ALUMINUM STOREFRONT DOOR CLOSER

Door Opening Degrees

Arm Function	Regular Arm, Top Jamb Parallel Arm	Parallel Rigid Arm	*CloserPlus* Parallel Arm	*CloserPlus* Spring Parallel Arm	*Unitrol* Parallel Arm	*Unitrol* Top Jamb	Low Profile Regular, Parallel	Cushion Stop Arm
Non-Hold Open	✓	✓	85° to 110°	85° to 110°	85° to 110°	85° to 110°	✓	85° to 110°
Hold Open	90° to 180°	85° to 180°	85° to 110°	85° to 110°	85° to 110°	85° to 110°	N/A	N/A

✓ = *180° trim and template permitting*

SPECIFICATIONS

1601 Series

Closers for interior and exterior doors shall be full rack-and-pinion type with cast aluminum alloy shell. Closers shall be surface mounted and shall project no more that 2-7/8" from the surface of the door. Closers shall be non-handed to permit installation on doors of either hand. Closer fluid shall contain lubricity and anti-oxidation agents. Closer fluid shall maintain stable viscosity to allow door closer to perform in temperatures ranging from extremely high to as low as -40°F. Closers shall have multi-size spring power adjustment to permit setting of spring from (1 through 6). Closers shall have two non-critical valves, hex key adjusted, to independently regulate sweep and latch speed. Closers shall have adjustable backcheck cushioning controlled by a hex key adjusted valve.

[Closer body shall be enclosed in/concealed with a full molded cover.]

[Closers shall be highly corrosion resistant and shall have all external body components of aluminum, zinc alloy or stainless steel material and all stainless steel fasteners.]

Regular arm and top jamb closers shall have a non-hold open shoe permitting 15% (+/- 7-1/2%) power adjustment. ** Norton Rixson [1601] [1601SS].

***For special arms insert the appropriate specification from column two on this page.*

1600BC Series

Closers for interior and exterior doors shall be full rack-and-pinion type with cast aluminum alloy shell. Closers shall be surface mounted and shall project no more that 2-7/8" from the surface of the door. Closers shall be non-handed to permit installation of doors of either hand. Closer fluid shall contain lubricity and anti-oxidation agents. Closer fluid shall maintain stable viscosity to allow the door closer to perform in temperatures ranging from extremely high to as low as -40°F. Closers shall be sized for each door. Closers shall have two non-critical valves, hex key adjusted, to independently regulate sweep and latch speed. [Closers shall have adjustable backcheck cushioning controlled by a hex key adjusted valve.]

Regular arm and top jamb closers shall have a non-hold open shoe permitting 15% (+/- 7-1/2%) power adjustment.** Norton Rixson [1600BC].

***For special arms insert that specification here (see column two on this page).*

**Unitrol® Arm

Door closers shall have built in-door stop [and holder] effective at one point selected at installation, from 85° - 115° in five-degree increments. Door stop shall be cushioned by a shock-absorbing heavy-duty spring action effective at the [soffit plate] [arm shoe] pivot. [Closers shall be provided for parallel arm installation using rigid steel main arm and secondary arm lengths proportional to the door width to reduce racking at the hinge/pivot.] [Closers shall be provided for top jamb installation using steel, rigid main arm and telescoping secondary arm adequate for the frame reveal of the openings.] (Closer arm shall have ball and detent hold open feature that can be engaged or disengaged by 1/4 turn of mechanism; and hold open strength shall be adjustable.)

**CloserPlus® Arm

Door closers shall have built-in door stop [and holder] effective at one point selected at installation, from 85° - 110° in five-degree increments. Door stop mechanism shall be reversible and attached to soffit plate. [Hold open mechanism shall have engage/disengage and strength selection actuated by thumbturn.] Closers shall be provided for parallel arm installation using rigid steel main and secondary arm.

**CloserPlus Spring™ Arm

Door closers shall have built in door stop[and holder] effective at one point selected at installation, from 85° - 110° in five-degree increments. Door stop mechanism shall have a buffer spring that engages prior to the dead stop feature, reducing shock loads to the door and frame assembly. Door stop mechanism shall be reversible and attached to soffit plate. [Hold open mechanism shall have engage/disengage and strength selection actuated by thumbturn.] Closers shall be provided for parallel installation using rigid steel main and secondary arm.

APPLICATIONS



Regular Arm

This is the only pull-side application where a double lever arm is used. It is the most power-efficient application for a door closer. Sufficient frame, door and/or ceiling clearance must be considered.

Since the arm assembly projects directly out from the frame, this application may present an aesthetics issue or be prone to vandalism.

Non-hold open arm shown



Top Jamb

For efficiency reasons this application provides the best alternative to the regular arm application. There must be sufficient frame face and/or ceiling clearance for this application. It requires a top rail on the door of just 2-1/8" (54mm). This application provides the best door control for doors in exterior walls that swing out of a building.

The entire door closer and arm assembly project from the frame, similar to the regular arm application, where the matters of appearance and malicious abuse can be of concern. Consideration must be given to depth of the frame reveal.

Non-hold open arm shown



Parallel Arm

This application provides the most appealing design appearance for a surface-mounted door closer having a double lever arm. This may also be beneficial in vandalism-prone areas. It is on the push side of the door and the arm assembly extends almost parallel to the door. In the closed position, there is very little or no hardware projecting beyond the frame face in most situations.

Due to the geometry of the arm it is approximately 25% less power-efficient than a regular arm application.

The entire closer and arm assembly are mounted below the frame stop, requiring a top rail clearance on the door of between 5-3/8" (137mm), when using a low-profile arm (1680 series), to 6-3/8" (162mm), when using the hold open arm.

Non-hold open arm shown

NORTON RIXSON

ASSA ABLOY

1600 SERIES
ALUMINUM STOREFRONT DOOR CLOSER

APPLICATIONS



Corner Bracket

This application can be used where top jamb and parallel arm application will not accommodate the door and frame conditions. Requires minimal top rail on the door; however, vertical clearance to the floor within the door opening should be checked to ensure code compliance.

The close proximity, for this application, of the door closer to the door's pivot point reduces the door closer's power efficiency by approximately 25% when compared to a regular arm. The projection of the arm from the door face might pose questions regarding design parameters or environment.



Parallel Rigid Arm

An enhanced variation of the standard parallel arm assembly that is intended for use in heavy traffic areas where auxiliary door stops are installed.

Hold open arm available - specify hand when ordering.

Non-hold open arm shown



CloserPlus® Arm

Similar to the Parallel Rigid arm, this arm incorporates a stop at the arm's soffit plate to dead stop the door at a predetermined degree of door swing between 85° and 110°, in 5° increments. Prior to dead stop the door closer's backcheck feature slows the door speed to reduce the impact of the stop action.

The CloserPlus Arm is intended for use where an auxiliary door stop cannot be utilized and no more than moderate abuse is anticipated. Where more extreme conditions are expected, use of a Unitrol® arm is recommended.

Available with or without hold open. (Hold open tension is adjustable.)
Non-hold open arm shown



CloserPlus Spring™ Arm

This heavy-duty stop arm includes all the features of the *CloserPlus* arm, plus an added buffer spring that is compressed prior to the arm hitting the dead stop point. This greatly reduces the shock of the stopping action that occurs with the *CloserPlus* arm.

Thumbturn hold open is available.

NORTON RIXSON

ASSA ABLOY

1600 SERIES
ALUMINUM STOREFRONT DOOR CLOSER

APPLICATIONS

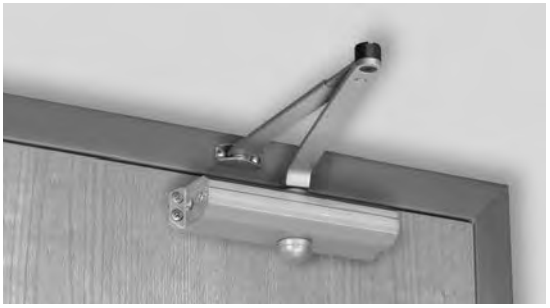

Cushion Stop Arm

The Cushion Stop arm is designed to help protect the closer from damage in applications where an auxiliary stop cannot be used and moderate abuse is anticipated. Available for regular arm, non-hold open installations, this arm has a stop mounted on the arm elbow and allows the door to swing 85° to 110° based on template installation.



Unitrol® Arm

Can be used for either parallel arm or top jamb applications. *Unitrol* arms combine the features of a double lever arm overhead door stop/holder with the backcheck feature of the door closer to reduce door stopping shock loads to a minimum. The *Unitrol* uses a compression spring buffer at the soffit plate/arm shoe that will absorb 30 lbs. of force, 5° prior to the door's dead stop. Coupled with the door closer's backcheck feature, this arm provides the most controlled stop available with a surface door closer.

For parallel arm applications there are three different length arm assemblies. Each length is designed for a specific range of door widths, to provide precise door control. This further lessens the dead stop impact on the door's hinges/pivots.

Only available in painted finishes.

Specify depth of reveal when using top jamb mounting.

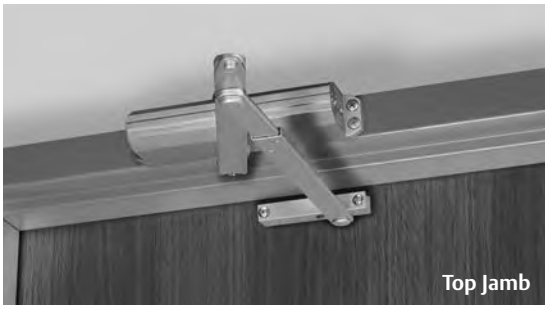

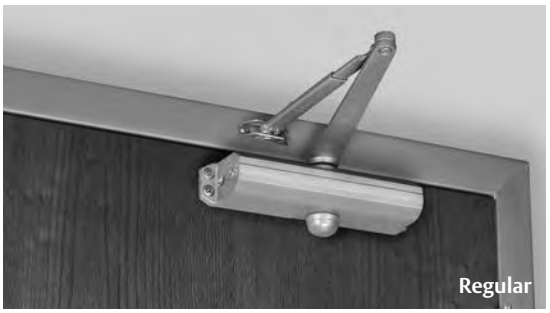

Low-Profile Arms

Supplied with series door closers for non-hold open installations only. Low-profile arms have a reduced height elbow joint and a straight main arm. This enables the door closer to be installed in less vertical space. Non-hold open function only.

Regular Arm: allows closer to be installed where there is as little as 1" (25mm) of frame face or ceiling clearance.



Parallel Arm: allows closer to be installed 1/2" (13mm) higher up on door than standard parallel arm application. Suffix "P" to the catalog number; i.e., P1680BC, P1681.

NORTON RIXSON

ASSA ABLOY

1600 SERIES
ALUMINUM STOREFRONT DOOR CLOSER

REGULAR ARM

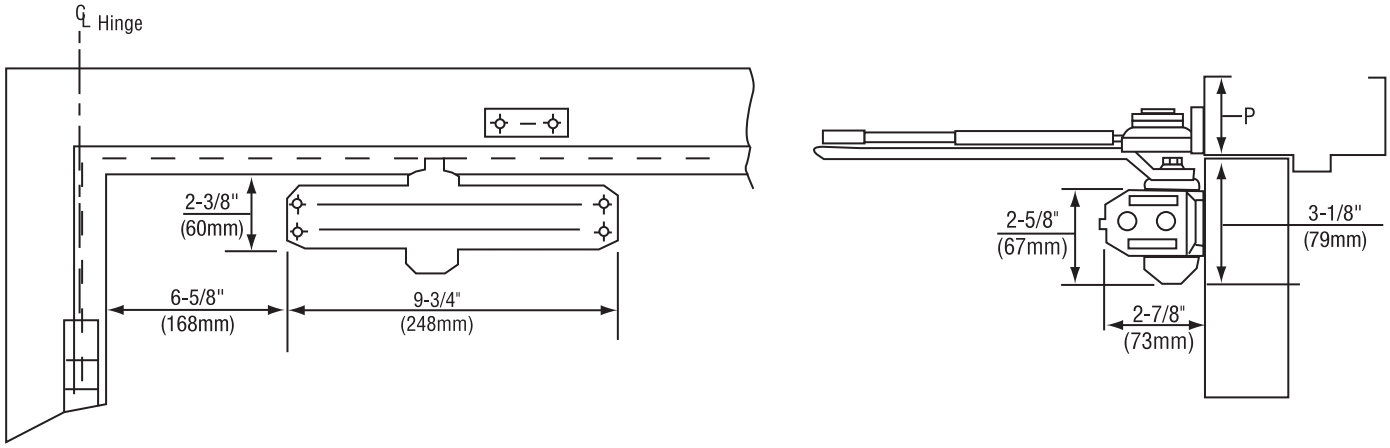

Mounting holes for closer body are spaced 3/4" (19mm) vertically x 9-1/16" (230mm) horizontally.

Maximum Door Size Inches (cm)		Model Number			
		Sized Closers		Multi-Sized Closers	
Interior	Exterior	Non-Hold Open	Hold Open	Non-Hold Open	Hold Open
32" (81)	—	—	—	1601	1601H
38" (97)	30" (76)	1603BC	1603BCH		
42" (107)	36" (91)	1604BC	1604BCH		
48" (122)	42" (107)	—	—		
—	48" (122)	—	—		

P Minimum Ceiling Clearance Inches/mm		
Non-Hold Open		Hold Open
1600BC/1601	1680BC/1681	1-5/8" (41)
1-1/2" (38)	1" (25)	

Notes:
1601 door closers are adjustable for sizes 1 through 6 and can be adjusted to conform to ADA opening force requirements.

NORTON RIXSON

ASSA ABLOY

1600 SERIES
ALUMINUM STOREFRONT DOOR CLOSER

TOP JAMB

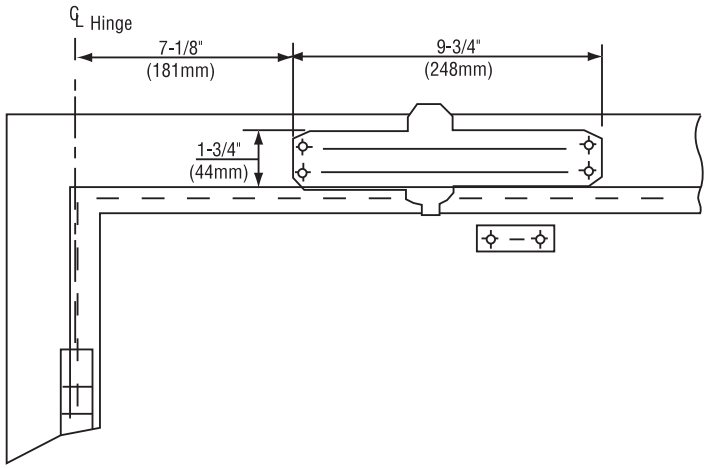

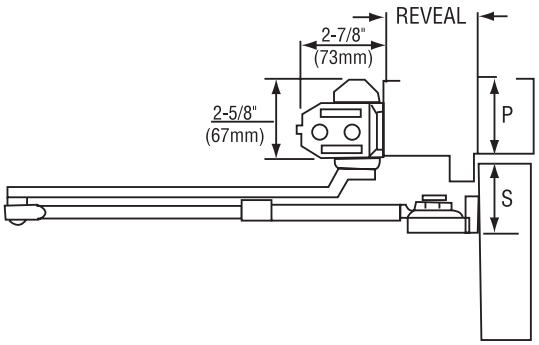

Mounting holes for closer body are spaced 3/4" (19mm) vertically x 9-1/16" (230mm) horizontally.

Maximum Door Size Inches (cm)		Model Number			
		Sized Closers		Multi-Sized Closers	
Interior	Exterior	Non-Hold Open	Hold Open	Non-Hold Open	Hold Open
32" (81)	—	—	—	1601	1601H
38" (97)	30" (76)	1603BC J1603BC J1683BC^	1603BCH J1603BCH		
42" (107)	36" (91)	1604BC J1604BC J1684BC^	1604BCH J1604BCH		
48" (122)	42" (107)	—	—		
—	48" (122)	—	—		

Notes:
1601 door closers are adjustable for sizes 1 through 6 and can be adjusted to conform to ADA opening force requirements.

^Narrow-Profile Arm Closers can only be installed with 1687/1688 drop plate.

Non-Hold Open- Use standard 1600 closer for frame reveals between 0"- to 3" (0-76mm). Use top jamb J1600 closer for frame reveals from 3" to 7" (76 to 178mm). Hold Open Use standard 1600H closer for frame reveals between 0" to 2-3/4" (0-70mm). Use top jamb J1600H closer for frame reveals from 2-3/4" to 6-3/4" (70 to 171mm).

P Minimum Ceiling Clearance		S Minimum Top Rail Clearance		
Without Drop Plate	With Drop Plate	Without Drop Plate	With 1687 Drop Plate	With 1688 Drop Plate
1600BC/1601	1600BC/1601 1680BC/1681	1600BC/1601	1600BC/1601	1600BC/1601 1680BC/1681
2-5/8" (67)	1-3/4" (44)	1-7/8" (48)	2-5/8" (67)	4" (102)

Experience a safer and more open world

NORTON RIXSON

ASSA ABLOY

1600 SERIES
ALUMINUM STOREFRONT DOOR CLOSER

PARALLEL ARM

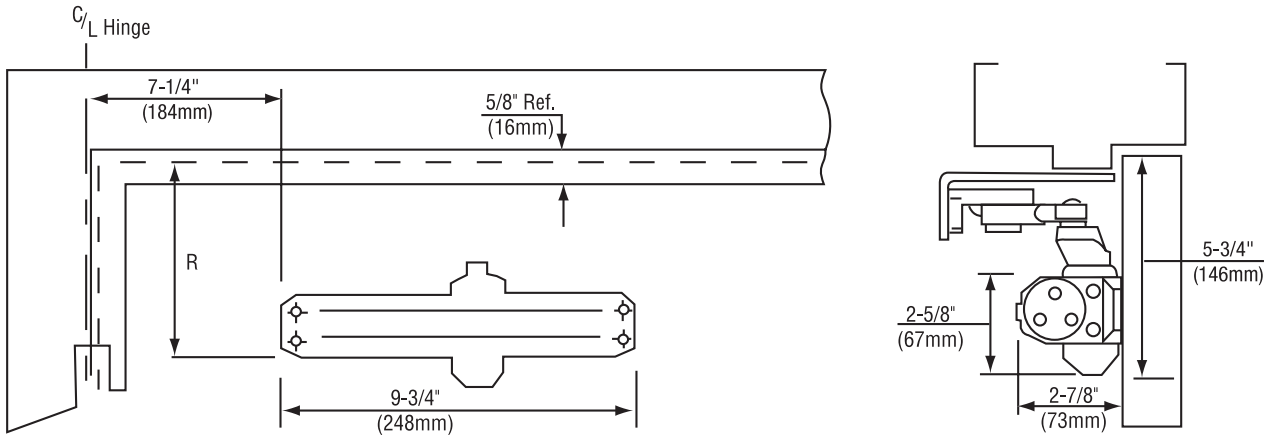

Mounting holes for closer body are spaced 3/4" (19mm) vertically x 9-1/16" (230mm) horizontally.

Maximum Door Size Inches (cm)		Model Number			
		Sized Closers		Multi-Sized Closers	
Interior	Exterior	Non-Hold Open	Hold Open	Non-Hold Open	Hold Open
30" (76)	—	—	—	1601	1601H
36" (91)	30" (76)	P1603BC	P1603BCH		
42" (107)	36" (91)	P1604BC	P1604BCH		
48" (122)	42" (107)	—	—		
—	48" (122)	—	—		

Notes:
This door sizing information also applies to corner bracket mounted closers.

1601 door closers are adjustable for sizes 1 through 6 and can be adjusted to conform to ADA opening force requirements.

R Minimum Top Rail of Door with 5/8" (16mm) frame stop Inches/mm			
Without Drop Plate		With Drop Plate	
1600BC 1601	1680BC 1681	1600BC 1601	1680BC 1681
5" (127)	4" (102)	3-1/8" (79)	2-1/8" (54)

NORTON RIXSON

ASSA ABLOY

1600 SERIES
ALUMINUM STOREFRONT DOOR CLOSER

PARALLEL RIGID ARM

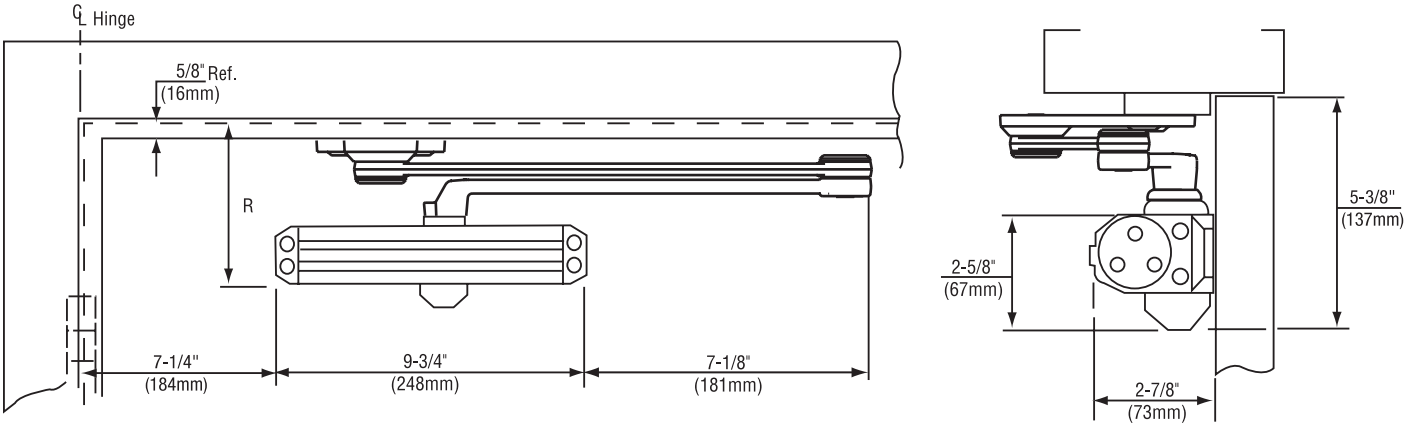

Mounting holes for closer body are spaced 3/4" (19mm) vertically x 9-1/16" (230mm) horizontally.

Door Size Wood or Metal Inches (cm)		Model Number			
		Sized Closers		Multi-Sized Closers	
Interior	Exterior	Non-Hold Open	Hold Open	Non-Hold Open	Hold Open
28"-32" (71-81)	—	—	—	PR1601	PR1601H
33"-36" (84-91)	28"-32" (71-81)	PR1603BC	PR1603BCH		
37"-42" (94-107)	33"-36" (84-91)	PR1604BC	PR1604BCH		
43"-48" (109-122)	37"-42" (94-107)	—	—		
—	43"-48" (109-122)	—	—		

Notes:
1601 door closers are adjustable for sizes 1 through 6 and can be adjusted to conform to ADA opening force requirements.

R Minimum Top Rail of Door with 5/8" (16mm) frame stop	
Without Drop Plate	With Drop Plate
4-1/2" (114)	2-5/8" (67)

Experience a safer and more open world

NORTON RIXSON

ASSA ABLOY

1600 SERIES
ALUMINUM STOREFRONT DOOR CLOSER

CLOSERPLUS® ARM

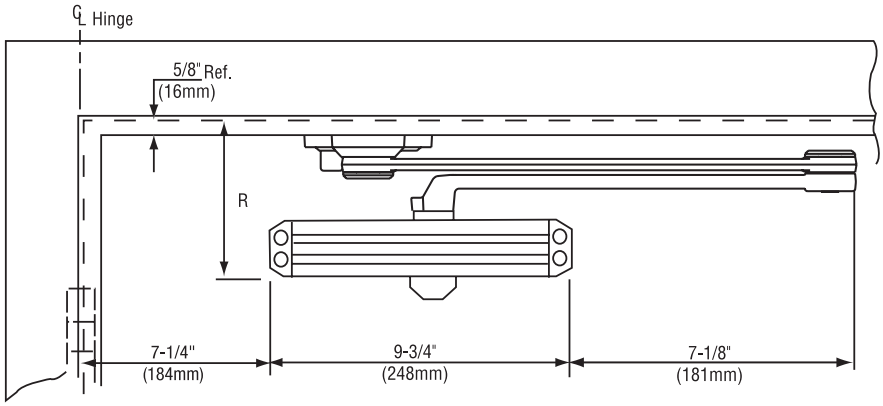

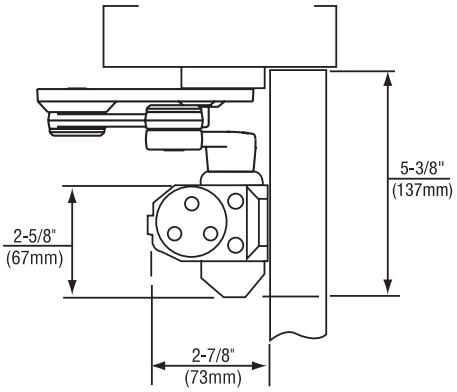

Mounting holes for closer body are spaced 3/4" (19mm) vertically x 9-1/16" (230mm) horizontally.

Door Size Wood or Metal Inches (cm)		Model Number			
		Sized Closers		Multi-Sized Closers	
Interior	Exterior	Non-Hold Open	Hold Open	Non-Hold Open	Hold Open
28"-32" (71-81)	—	—	—	CLP1601	CLP1601T
33"-36" (84-91)	28"-32" (71-81)	CLP1603BC	CLP1603BCT		
37"-42" (94-107)	33"-36" (84-91)	CLP1604BC	CLP1604BCT		
43"-48" (109-122)	37"-42" (94-107)	—	—		
—	43"-48" (109-122)	—	—		

Notes:
1601 door closers are adjustable for sizes 1 through 6 and can be adjusted to conform to ADA opening force requirements.

R Minimum Top Rail of Door with 5/8" (16mm) frame stop	
Without Drop Plate	With Drop Plate
4-1/2" (114)	2-5/8" (67)

NORTON RIXSON

ASSA ABLOY

1600 SERIES
ALUMINUM STOREFRONT DOOR CLOSER

CLOSERPLUS SPRING™ ARM

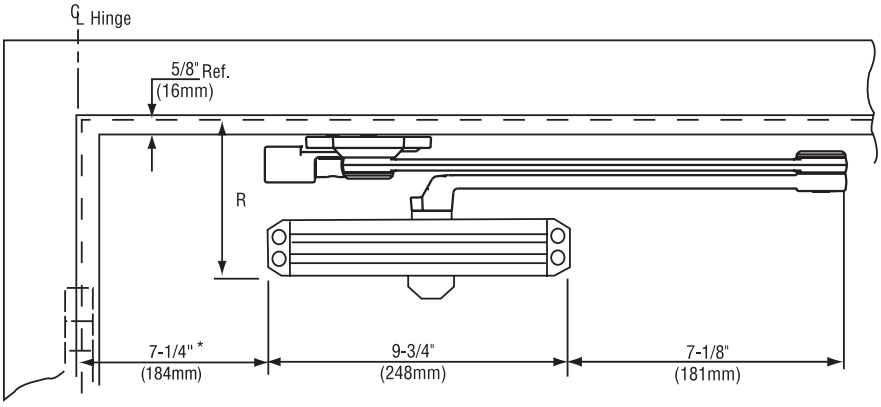

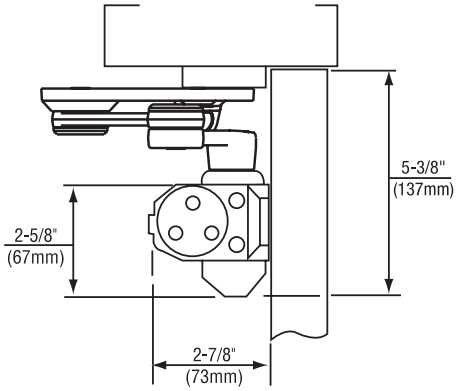

Mounting holes for closer body are spaced 3/4" (19mm) vertically x 9-1/16" (230mm) horizontally.

Door Size Wood or Metal Inches (cm)		Model Number			
		Sized Closers		Multi-Sized Closers	
Interior	Exterior	Non-Hold Open	Hold Open	Non-Hold Open	Hold Open
28"-32" (71-81)	—	—	—	CPS1601	CPS1601T
33"-36" (84-91)	28"-32" (71-81)	CPS1603BC	CPS1603BCT		
37"-42" (94-107)	33"-36" (84-91)	CPS1604BC	CPS1604BCT		
43"-48" (109-122)	37"-42" (94-107)	—	—		
—	43"-48" (109-122)	—	—		

Notes:
1601 door closers are adjustable for sizes 1 through 6 and can be adjusted to conform to ADA opening force requirements.

R Minimum Top Rail of Door with 5/8" (16mm) frame stop	
Without Drop Plate	With Drop Plate
4-1/2" (114)	2-5/8" (67)

Experience a safer and more open world

1600 SERIES
ALUMINUM STOREFRONT DOOR CLOSER

CUSHION STOP ARM

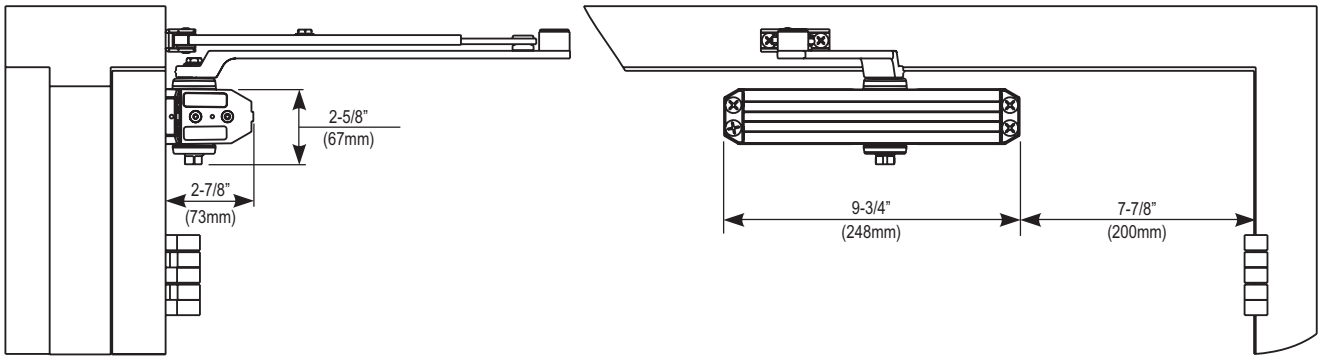

Mounting holes for closer body are spaced 3/4" (19mm) vertically x 9-1/16" (230mm) horizontally.

Maximum Door Size Inches (cm)		Model Number	
		Sized Closers	Multi-Sized Closers
Interior	Exterior	Non-Hold Open	Non-Hold Open
32" (81)	—	—	1601
38" (97)	30" (76)	1603BC	
42" (107)	36" (91)	1604BC	
48" (122)	42" (107)	—	
—	48" (122)	—	

Notes:
1601 door closers are adjustable for sizes 1 through 6 and can be adjusted to conform to ADA opening force requirements.

Minimum Ceiling Clearance Inches/mm
Non-Hold Open
1600BC/1601
1-1/2" (38)

NORTON RIXSON

ASSA ABLOY

1600 SERIES
ALUMINUM STOREFRONT DOOR CLOSER

PARALLEL UNITROL® ARM

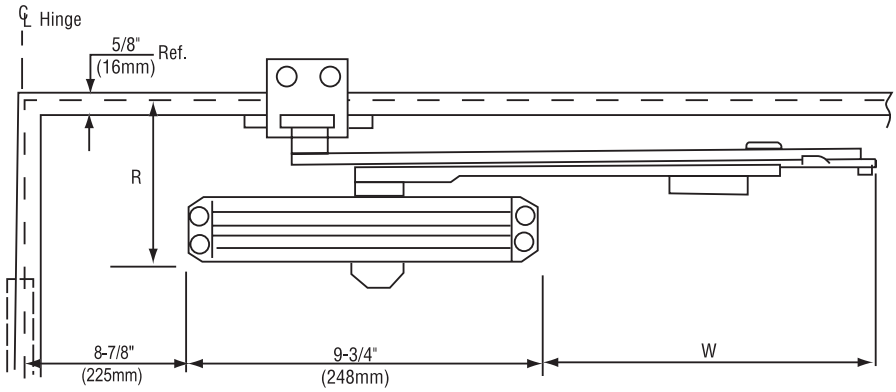

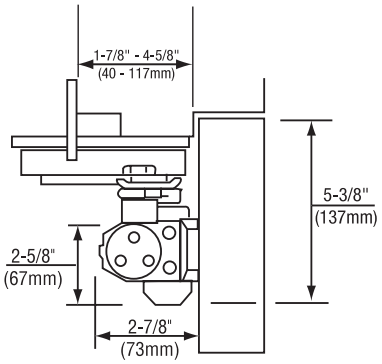

Mounting holes for closer body are spaced 3/4" (19mm) vertically x 9-1/16" (230mm) horizontally.

Door Size Wood or Metal Inches (cm)		Model Number				
		Sized Closers		Multi-Sized Closers		
Interior	Exterior	Non-Hold Open	Hold Open	Non-Hold Open	Hold Open	
28"-32" (71-81)	—	—	—	UNI1601	UNI1601H	x Specify Door Width
33"-36" (84-91)	28"-32" (71-81)	UNI1603BC	UNI1603BCH			
37"-41" (94- 104)	33"-36" (84-91)	UNI1604BC	UNI1604BCH			
42"-48" (107-122)	37"-41" (94-104)	—	—			
—	42"-48" (107-122)	—	—			

Notes:
1601 door closers are adjustable for sizes 1 through 6 and can be adjusted to conform to ADA opening force requirements.

Door Width	R Minimum Top Rail		W Arm Extension
	Without Drop Plate	With Drop Plate	
28"-32" (71- 81)	4-1/2" (114)	2-5/8" (67)	7" (178)
33"-41" (84- 104)			8-1/2" (216)
42"-48" (107- 122)			10" (254)

Experience a safer and more open world

NORTON RIXSON

ASSA ABLOY

1600 SERIES
ALUMINUM STOREFRONT DOOR CLOSER

TOP JAMB UNITROL® ARM

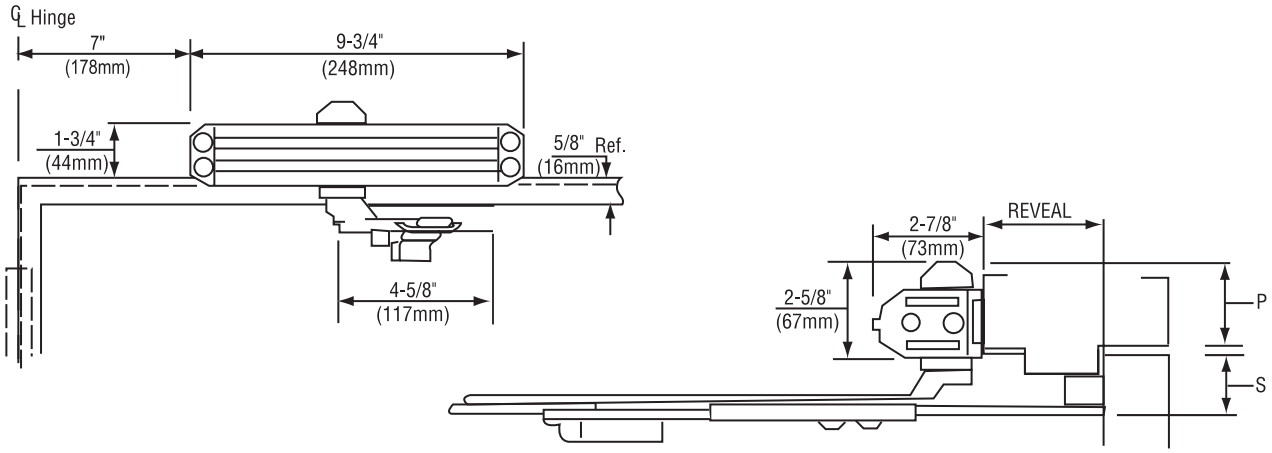

Mounting holes for closer body are spaced 3/4" (19mm) vertically x 9-1/16" (230mm) horizontally.

Door Size Wood or Metal Inches (cm)		Model Number				
		Sized Closers		Multi-Sized Closers		
Interior	Exterior	Non-Hold Open	Hold Open	Non-Hold Open	Hold Open	
28"-34" (71-86)	—	—	—	UNIJ1601	UNIJ1601H	x Specify Frame Reveal
35"-42" (89-107)	28-34 (71-86)	UNI1603BC	UNIJ1603BCH			
43"-48" (109-122)	35-42 (89-107)	UNI1604BC	UNIJ1604BCH			
49"-54" (124-137)	43-48 (109-122)	—	—			
—	49-54 (124-137)	—	—			

Notes:
1601 door closers are adjustable for sizes 1 through 6 and can be adjusted to conform to ADA opening force requirements.

P Minimum Ceiling Clearance		S Minimum Top Rail Clearance	
Without Drop Plate	With Drop Plate	Without Drop Plate	With Drop Plate
2-5/8" (67)	1-3/4" (44)	2-3/8" (60)	3-1/8" (79)

NORTON RIXSON

ASSA ABLOY

1600 SERIES
ALUMINUM STOREFRONT DOOR CLOSER

REGULAR ARM

Brackets for Non-Hold Open Arms

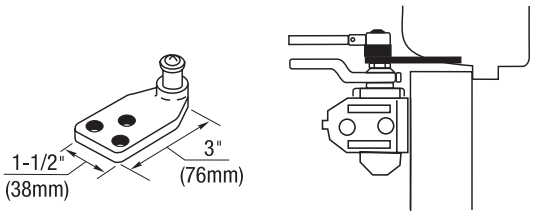

Molded/Bull Nose Trim - 2403B Bracket: For use where the door frame has molded or bull nose trim which will not accept a standard non-hold open shoe. The bracket is mortised into the frame rabbet, and projects beyond the face of the frame. It will accommodate a frame rabbet up to 2" (51mm) deep.

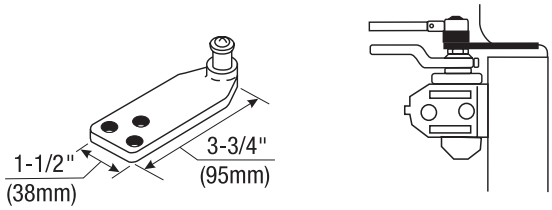

Molded/Bull Nose Trim - 2403-3/4 Bracket: This bracket is similar to-but longer than-the 2403B bracket. It is designed to accommodate frame rabbets from 2" to 2-7/8" (51 to 73mm) deep.

Brackets for Hold Open Arms

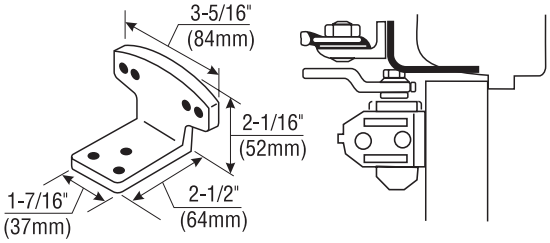

Molded/Bull Nose Trim - 80 Bracket: For use where the door frame has molded or bull nose trim which will not accept a standard hold open shoe. It is mortised into the frame rabbet, and projects beyond the face of the frame. It will accommodate a rabbet up to 2" (51mm) deep. This bracket is used in combination with the standard hold open mounting shoe.

Corner Brackets for Closer Mounting

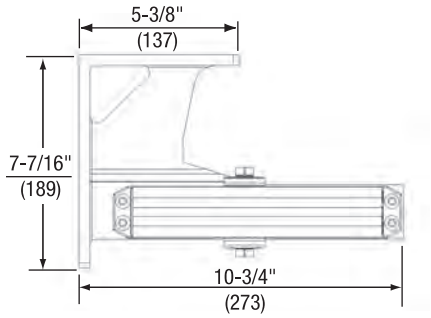

For Closer sizing information, use the Parallel Arm sizing chart on page 141.

Mounting Opposite Hinge Side - 1647 Corner Bracket: For use where it is desired to mount the closer regular arm on the opposite to hinge side of the door. Can also be used to clear an overhead door holder.

TOP JAMB

Closer Mounting Plates

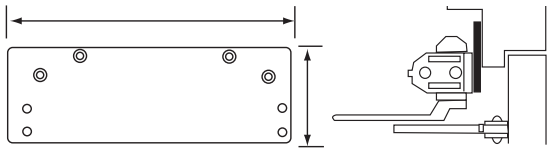

Overhead Door Holder - 1688 Drop Plate: For use where a overhead door holder prevents normal top jamb mounting. This places the center line of the arm mounting screws at 3-1/2" (89mm) from the top of the door.

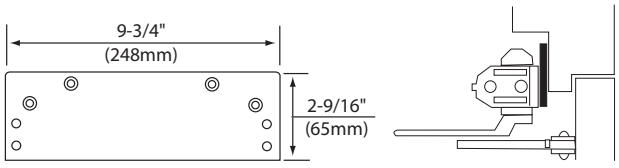

Low Ceiling Clearance - Overhead Door Holder - 1687 Drop Plate: For use where the ceiling clearance is between 1-3/4" and 2-5/8" (44 and 67mm). Or for use where an overhead door holder prevents normal top jamb mounting. This places the centerline of the arm mounting screws at 2-1/8" (54mm) from the top of door.

Experience a safer and more open world

1600 SERIES
ALUMINUM STOREFRONT DOOR CLOSER

PARALLEL ARM

Closer Mounting Plate

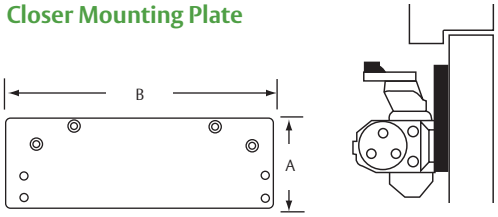

Plate No.	Dimensions	
	A (width)	B (length)
1688	3-1/4" (83)	9-3/4" (248)
1688C	4-1/8" (105)	9-7/8" (251)

Note: 1688C – To be used when optional cover is specified.

Narrow Top Rail - 1688 Drop Plate: For use where a narrow top rail prevents the closer from being mounted directly to the door surface. This drop plate can be used to mount a closer on a top rail as narrow as 3-1/8" (79mm) in height for 1600BC or 2-1/8" (54mm) for 1680BC.

Brackets for Non-Hold Open Arms

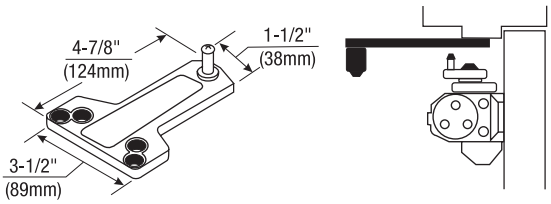

Standard Installation - 1618A Soffit Plate: This soffit plate is supplied standard with parallel arm closers. It can be mounted where the frame soffit is as narrow as 1" (25 mm).

Specify 1618A-SS for stainless steel soffit plate: With Series P1600SS closers, a 1618A-SS soffit plate fabricated of stainless steel is supplied standard.

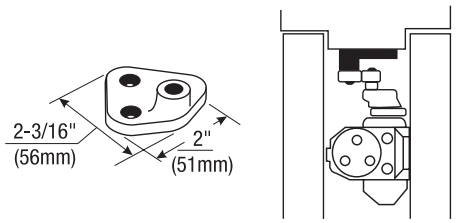

Mounting Between Doors - 2018 Soffit Bracket: For use where insufficient space between companion doors does not permit use of other soffit plates. This bracket permits mounting of the closer between doors with as little as 3" (76mm) of header space. Permits closer arm to clear up to 5/8" (16mm) high stop.

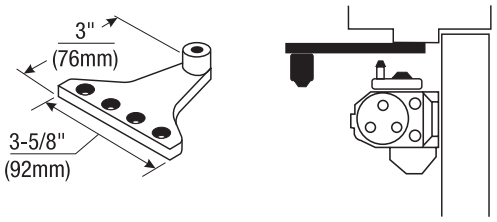

Narrow Frame/Removable Stop - 2018B Soffit Plate: For use where a narrow frame or frame with removable stop does not permit use of the standard soffit plate. This soffit plate may be mounted on the frame soffit or the frame rabbet where the stop does not exceed 5/8" (16mm) in height. All of the screw holes are in a straight line, requiring as little as 1-1/4" (32mm) of frame reveal to mount bracket and maintain good closer arm geometry. Where the frame soffit is as wide as 2" (51mm), this soffit plate may be used to clear weather-stripping that is up to 1-3/8" (35mm) wide and 5/8" (16mm) in height.

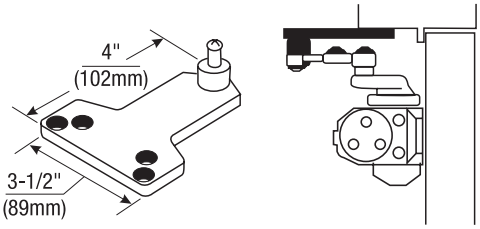

Blade/Applied Stop - 2018D Soffit Plate: For use where a blade or applied stop does not permit installation of the standard soffit plate. Mounts to either the frame soffit or rabbet. Since this soffit plate projects 7/8" (22mm) less than a standard soffit plate, it requires a minimum frame reveal of 1-1/2" (38mm). Permits closer to clear up to a 5/8" (16mm) high frame stop.

PARALLEL ARM

Brackets for Non-Hold Open Arms (continued)

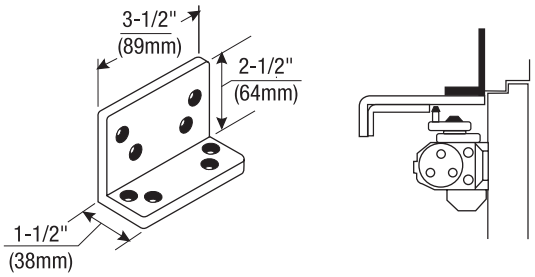

Flush Transom - 2022 Angle Bracket: For use where rabbeted or flush transom conditions prevent installation of a soffit plate. Used in combination with the 1618A soffit plate, or may be used in combination with the 2018S soffit plate when it is necessary for the closer arm to clear a separate overhead door holder.

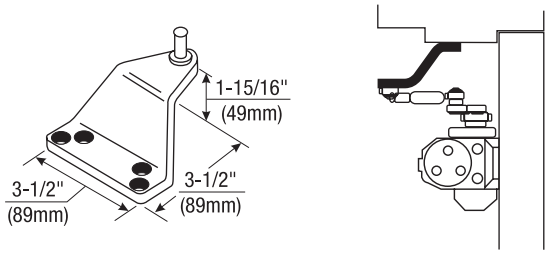

Extra-Clearance - 2018S Offset Soffit Plate: For use where the need for additional clearance prevents use of the standard soffit plate. This plate mounts to the frame soffit to provide up to 2" (51mm) of clearance when a separate overhead door holder is used.

Standard mounting requires a 2-5/8" (67mm) wide frame soffit. It may also be used where unusually high frame stops or weatherstripping prevents the use of other soffit plates.

Brackets for Hold Open Arms

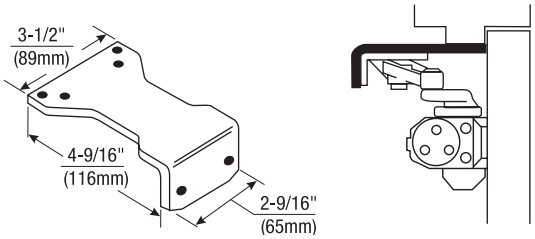

Parallel Hold Open - 1628H Adapter Plate: This Adapter Plate is supplied standard with all parallel arm hold open closers. It can also be used to convert regular arm or top jamb hold open arms to parallel arm installation. It can be mounted where the frame soffit is as narrow as 1" (25mm).

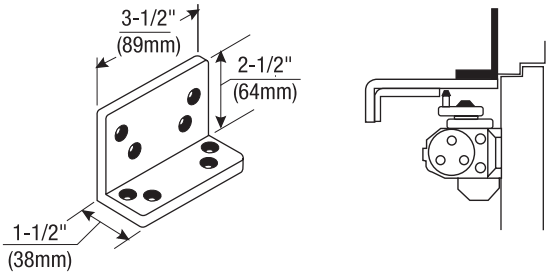

Flush Transom Hold Open - 2022 Angle Bracket: For use where rabbeted or flush transom conditions prevent installation of the standard 1628H hold open adapter plate. It is used in combination with the 1628H adapter plate.

1600 SERIES
ALUMINUM STOREFRONT DOOR CLOSER

PARALLEL RIGID ARM

Closer Mounting Plate

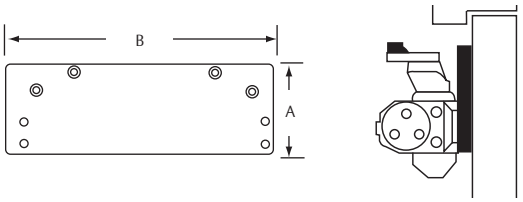

Plate No.	Dimensions	
	A (width)	B (length)
1688	3-1/4" (83)	9-3/4" (248)
1688C	4-1/8" (105)	9-7/8" (251)

Note: 1688C – To be used when optional cover is specified.

Narrow Top Rail - 1688 Drop Plate: For use where a narrow top rail prevents the closer from being mounted directly to the door surface. This drop plate can be used to mount a closer on a top rail as narrow as 2-5/8" (67mm) in height.

Brackets for Non-Hold Open Arms & Hold Open Arms

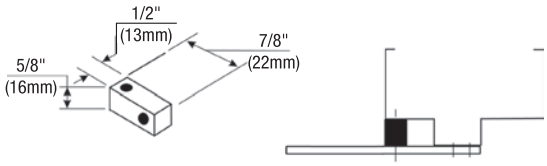

Standard - 2019S Spacer Block: For use where a narrow frame soffit does not provide adequate support for the soffit plate. Supplied as standard with all parallel rigid arm closers. For use on frame with either 1/2" (13mm) or 5/8" (16mm) high frame stop.

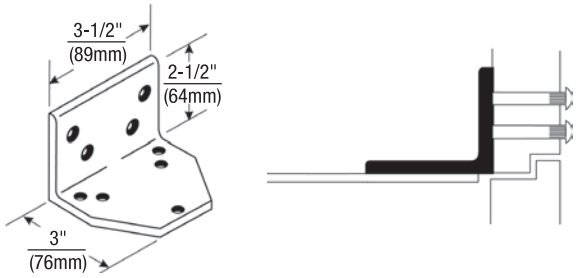

Flush Rabbeted Transom - 2019L Angle Bracket: For use where flush transom conditions prevent mounting of the standard soffit plate. This bracket is used in combination with the arm's soffit plate.

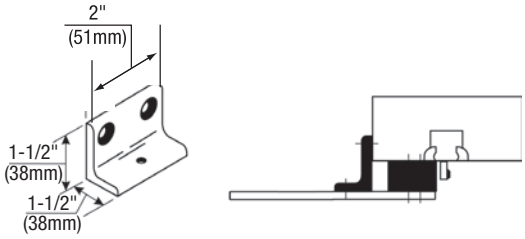

Narrow Frame - 6890 Support Bracket: For use where the frame is narrow and the soffit plate cannot be mounted directly to the frame soffit or rabbet. Used in combination with the 6891 Spacer Block on blade stop frames to provide extra support and needed clearance of the blade stop. Used on frame where frame stop does not exceed 5/8" (16mm) in height.

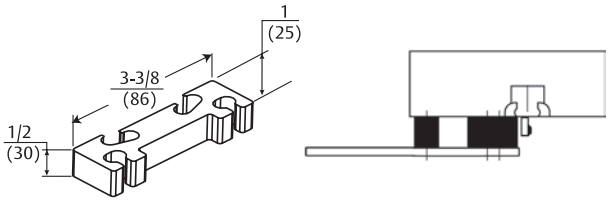

Clearance/Support Blade Stop - 6891 Spacer Block: For use where the door frame has a blade stop and the soffit plate must be mounted on the frame rabbet. This accessory is used in combination with the standard 2019S Spacer Block to provide clearance of the blade stop. For clearance of 5/8" (16mm) high-frame stop.

NORTON RIXSON

ASSA ABLOY

1600 SERIES
ALUMINUM STOREFRONT DOOR CLOSER

CLOSERPLUS® AND CLOSERPLUS SPRING™ ARMS

Closer Mounting Plate

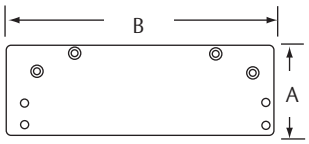

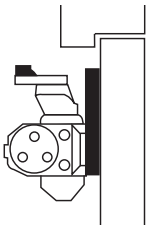

Plate No.	Dimensions	
	A (width)	B (length)
1688	3-1/4" (83)	9-3/4" (248)
1688C	4-1/8" (105)	9-7/8" (251)

Note: 1688C - To be used when optional cover is specified.

Narrow Top Rail - 1688 Drop Plate: For use where a narrow top rail prevents the closer from being mounted directly to the door surface. This drop plate can be used to mount a closer on a top rail as narrow as 2-5/8" (67mm) in height.

Brackets for Non-Hold Open Arms & Hold Open Arms

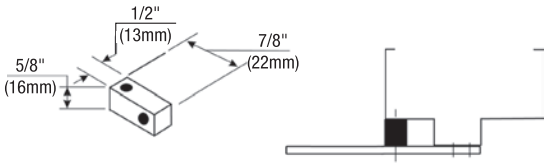

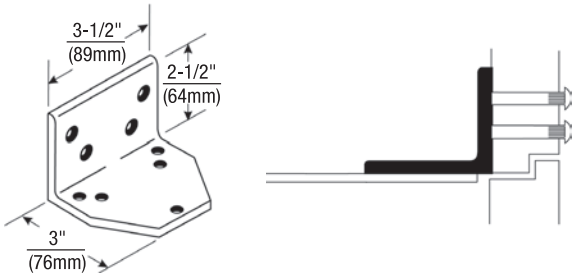

Standard - 2019S Spacer Block: For use where a narrow frame soffit does not provide adequate support for the soffit plate. Supplied as standard with all parallel rigid arm closers. For use on frame with either 1/2" (13mm) or 5/8" (16mm) high frame stop.

Flush Rabbeted Transom - 2019L Angle Bracket: For use where flush transom conditions prevent mounting of the standard soffit plate. This bracket is used in combination with the arm's soffit plate.

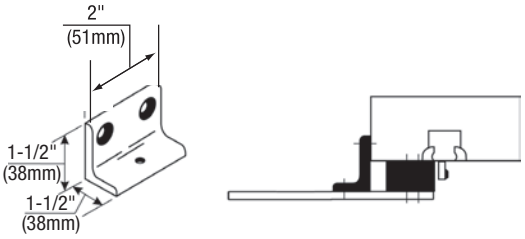

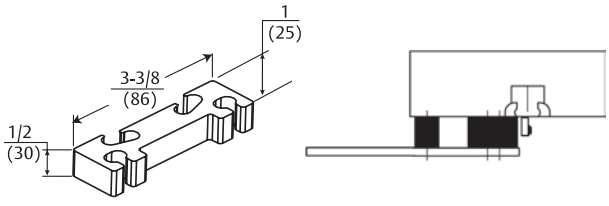

Narrow Frame - 6890 Support Bracket: For use where the frame is narrow and the soffit plate cannot be mounted directly to the frame soffit or rabbet. Used in combination with the 6891 Spacer Block on blade stop frames to provide extra support and needed clearance of the blade stop. Used on frame where frame stop does not exceed 5/8" (16mm) in height.

Clearance/Support Blade Stop - 6891 Spacer Block: For use where the door frame has a blade stop and the soffit plate must be mounted on the frame rabbet. This accessory is used in combination with the standard 2019S Spacer Block to provide clearance of the blade stop. For clearance of 5/8" (16mm) high-frame stop.

Experience a safer and more open world

1600 SERIES
ALUMINUM STOREFRONT DOOR CLOSER

UNITROL® ARM

Closer Mounting Plate (for Parallel Arm)

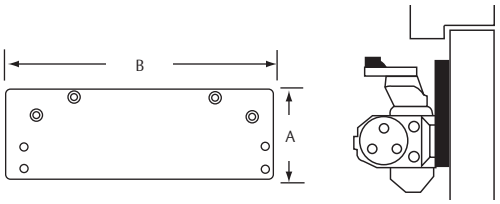

Plate No.	Dimensions	
	A (width)	B (length)
1688	3-1/4" (83)	9-3/4" (248)
1688C	4-1/8" (105)	9-7/8" (251)

Note: 1688C – To be used when optional cover is specified.

Narrow Top Rail - 1688 Drop Plate: For use where a narrow top rail prevents the closer from being mounted directly to the door surface. This drop plate can be used to mount a closer on a top rail as narrow as 2-5/8" (67mm) in height.

Soffit Plate Reinforcing Brackets (for Parallel Arm)

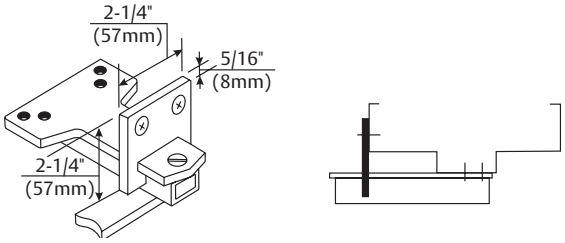

Additional Support - 6190 Reinforcing Bracket: Standard for use with all parallel arm Unitrol Door Controls. Provides additional support to the soffit plate on installations with door frame reveals from 1-7/8" to 4-5/8" (48 to 117mm).

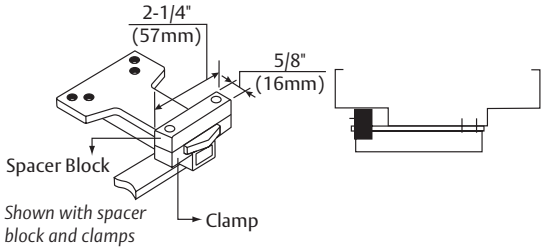

Wide Frame - 6191 Reinforcing Kit: Optional for use with all parallel arm Unitrol Door Controls. Used to support the soffit plate on installations with deep frames. Clamps may be used with or without the spacer block, depending on frame conditions.

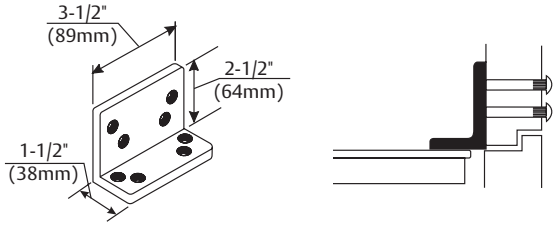

Flush Rabbeted Transom - 2022 Angle Bracket: Optional for use with all parallel arm Unitrol Door Controls. For use where rabbeted or flush transom conditions prevent installation of the soffit plate assembly. This bracket fastens to the overhead transom to provide a mounting surface for the soffit plate assembly.

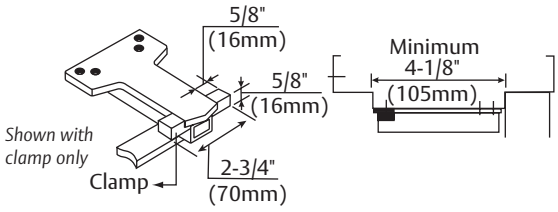

Closer Mounting Plate (for Top Jamb)

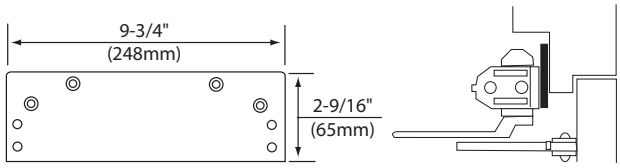

Low Ceiling Clearance - 1687 Drop Plate: For use where the ceiling clearance is between 1-3/4" and 2-5/8" (44 and 67mm). This places the centerline of the arm mounting screws at 2-5/8" (67mm) from the top of door.

SPECIAL ACCESSORIES

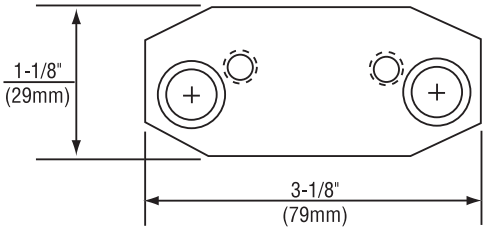

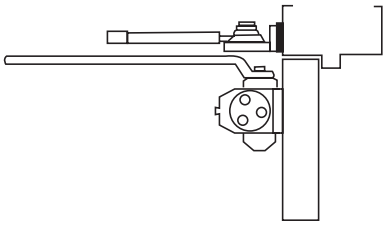

Converting Old Hold Open Installations - 2017 Adapter Plate: For use on old hold open installations with 2-1/2" (64mm) hole spacing on the holder bracket. Plate uses existing holes in either door or frame and accepts the new hold open bracket with 1-3/4" (44mm) hole spacing. For regular arm or top jamb installations.

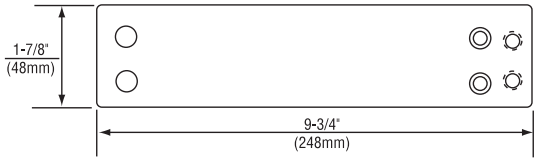

1699 Adapter Plate: Converts old 1602/1603 closer installations with 3/4" (19mm) x 8-3/16" (208mm) - spacing to new 1603 using existing mounting holes in door or frame.

NORTON RIXSON

ASSA ABLOY

1600 SERIES
ALUMINUM STOREFRONT DOOR CLOSER

PARTS

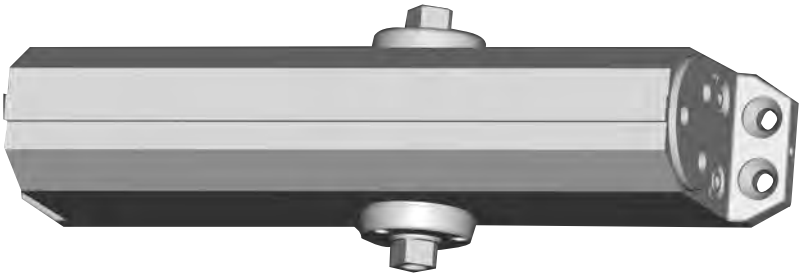

Body Only (Standard)	
160*BCLAP	Sized Closer
1601LAP	Multi-sized
1601SSLAP	Stainless Steel

Note: Mounting hardware included with all parts orders.

LAP = Less All Parts

* Specify closer size 3 or 4. Pinion cap and mounting screws supplied.

Optional Cover - 1600P

For regular arm and parallel arm applications. 2-7/8" (73mm) height x 3-1/6" (78mm) deep x 9-7/8" (251mm) long. To order with closer use "P" suffix; i.e. 1604BCP.

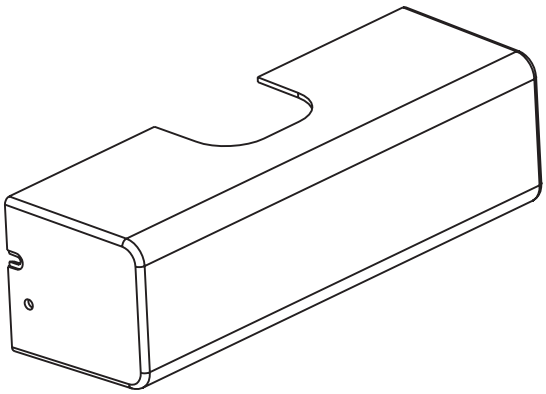

1639 Pinion Cap

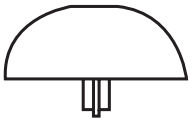

Steel Door Application

Sex-nut / Sleeve-nut : "SN" (4 per pack) or

Sex-nut / Sleeve-nut & Screw: "SNB" (4 per pack)

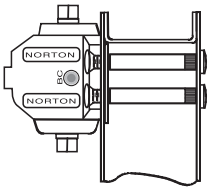

Door	SN's	SNB's
1-3/4"	SN-134	SNB134-38
2"	N/A	SNB200-38
2-1/4"	SN-214	SNB214-38
S.S. SNB's 1-3/4"	SN-134SS	SNB134SS-38

Aluminum and Wood Door Application

(Aluminum Door Shown)

Thru Bolt & Grommet Nut : "TBGN" (4 per pack)

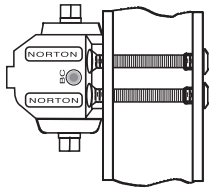

Door	TBGN's
1-3/8"	TBGN138-38
1-3/4"	TBGN134-38
2-1/4"	TBGN214-38

NON-HOLD OPEN ARM ASSEMBLIES

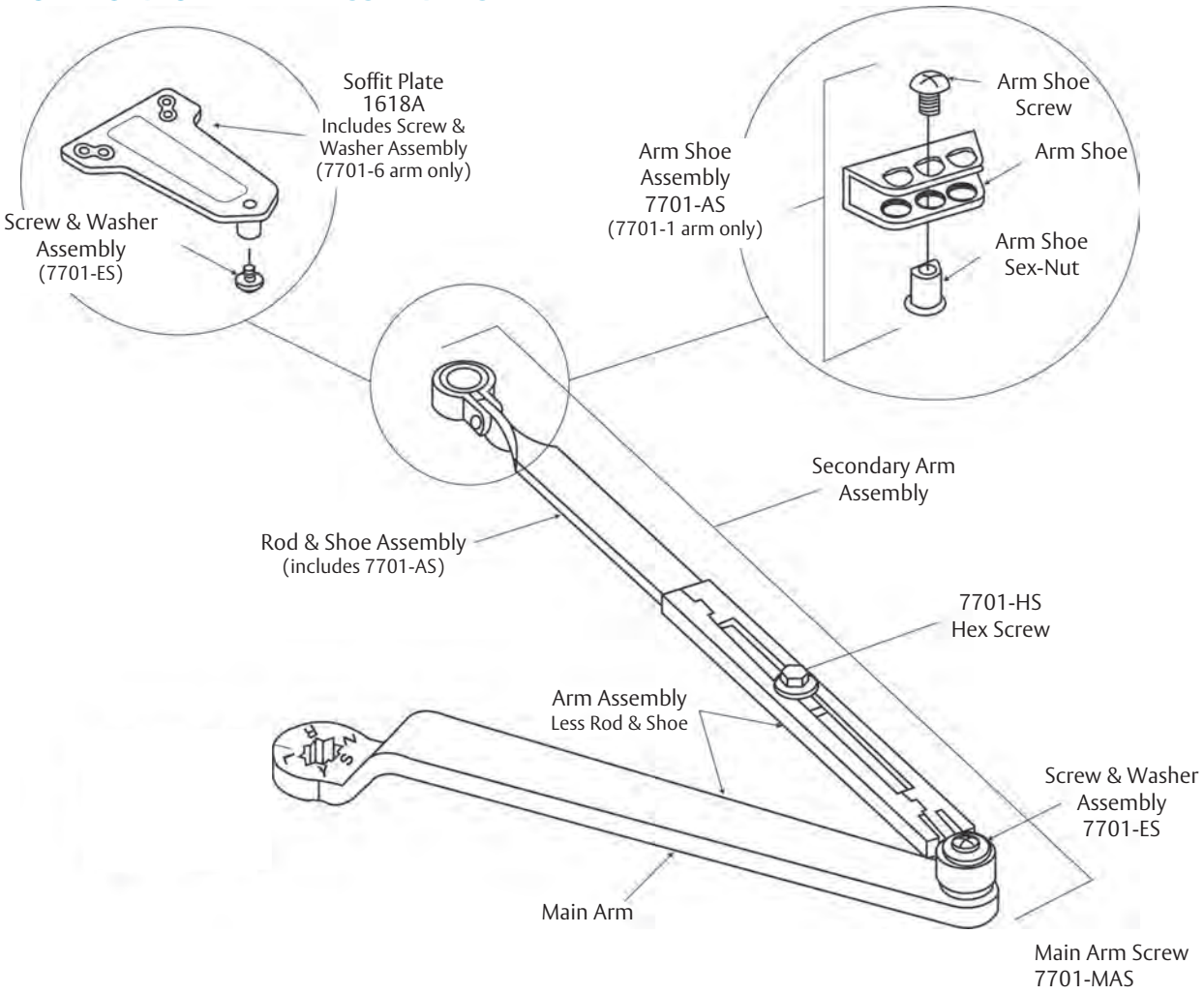

Note: Mounting hardware included with all parts orders.

Closer Series	Complete Arm Assembly	Main Arm Assembly[1] (length)(mm) (includes 7701-ES)	Secondary Arm Assembly (includes 7701-ES)	Arm Assembly Less Rod and Shoe	Rod & Shoe[2] Assembly (length)(mm)
1600BC/1601	7701-1	7701-1M (11)(279)	7701-111	7701-1W	7701-11 (8-7/8)(225)
J1600BC/J1601	7701-1A		7701-121		7701-11A (12-1/2)(318)
P1600BC/P1601	7701-6		7701-116		7701-16 (8-7/8)(225)
P1600BC/P1601[3]	7701-6A		7701-116A		7701-16A (12-1/2)(318)
1600BC/1601	7701-26 (Tri-Style® includes 7701-1 plus 1618A plate)				

1. C to C length shown in parentheses.
2. C of connecting link to end of rod shown in parentheses.
3. For 180° door swing when using a special template for doors hung on 6" to 8" (162 to 203mm) wide throw hinges.

1600 SERIES
ALUMINUM STOREFRONT DOOR CLOSER

STAINLESS STEEL ARM ASSEMBLIES

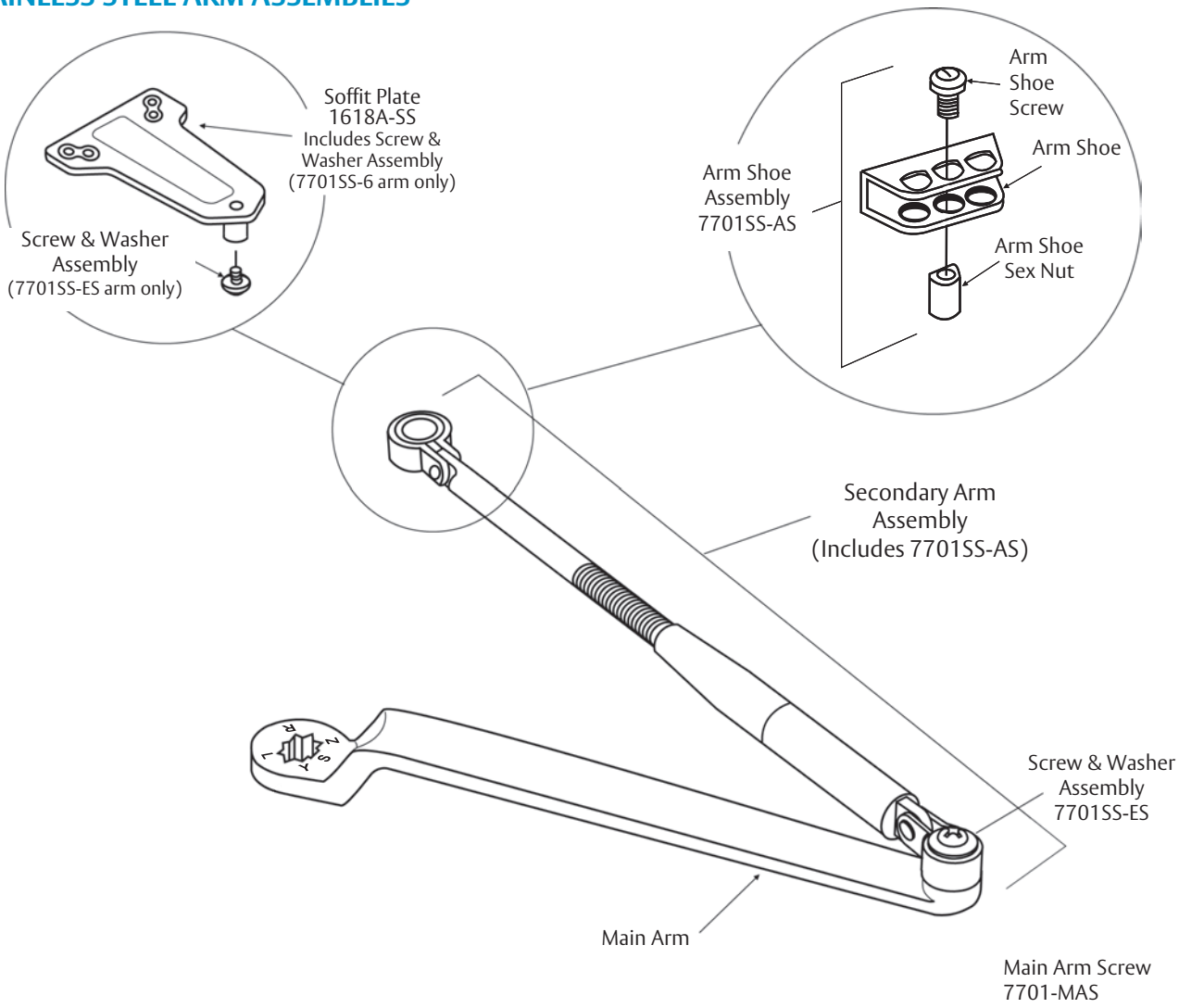

Note: Mounting hardware included with all parts orders.

Closer Series	Complete Arm Assembly	Main Arm Assembly[1] (length)(mm) (includes 7701SS-ES)	Secondary Arm Assembly (includes 7701SS-ES)
1601SS	7701SS-1	7701SS-1M (11) (279)	7701SS-111 (8-7/8)(225)
J1601SS	7701SS-1A		7701SS-121 (12-1/2)(318)
P1601SS	7701SS-6		7701SS-116 (8-7/8)(225)

1. C to C length shown in parentheses.

NORTON RIXSON

ASSA ABLOY

1600 SERIES
ALUMINUM STOREFRONT DOOR CLOSER

HOLD OPEN ARM ASSEMBLIES

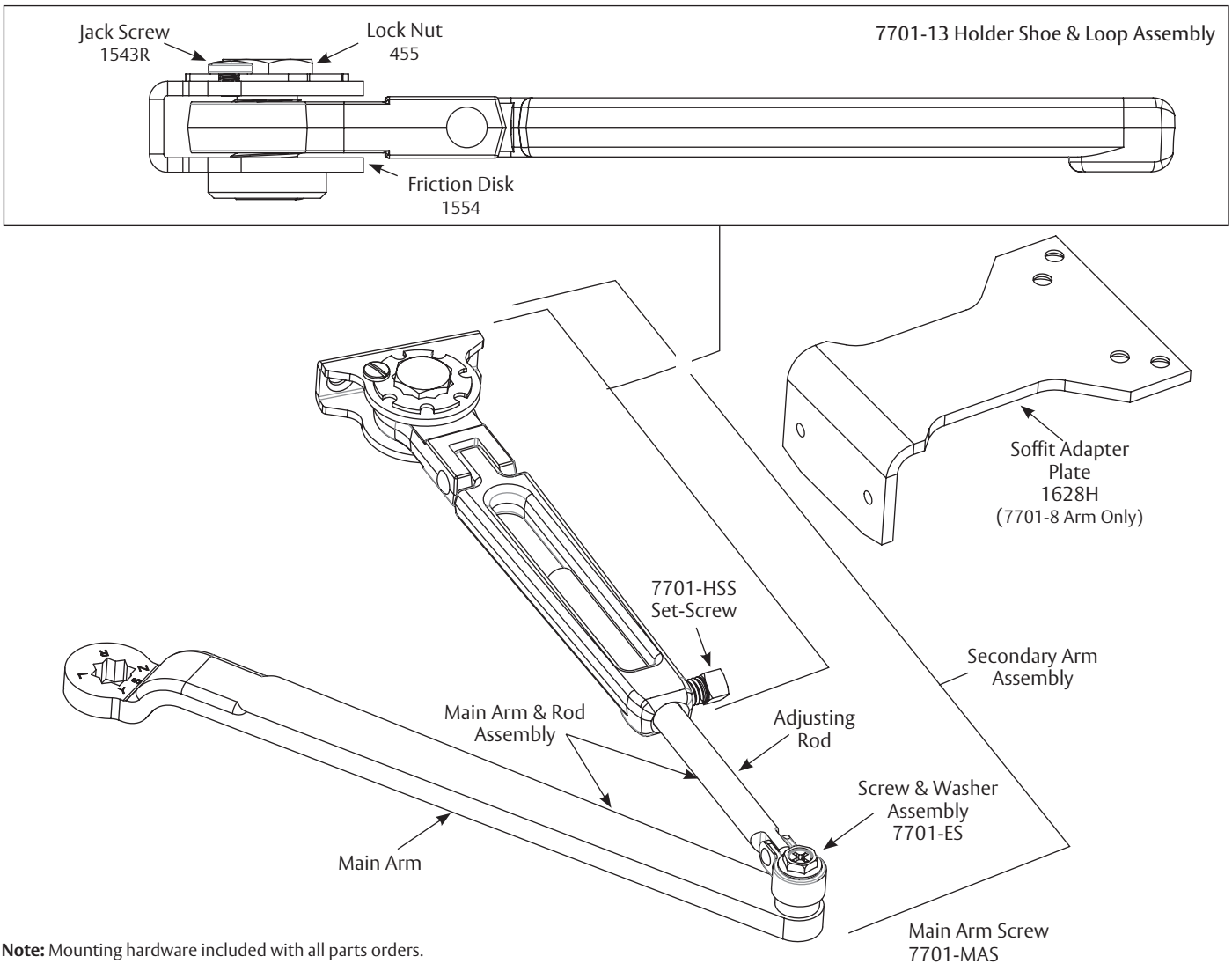

Note: Mounting hardware included with all parts orders.

Closer Series Assembly	Complete Arm Assembly	Main Arm[1] (Length)(mm) (includes 7701-ES)	Secondary Arm (includes 7701-ES)	Main Arm & Rod Assembly	Holder Shoe & Loop Assembly	Adjusting Arm[2] (Length)(mm)
1600BCH/1601H	7701-3/7701-8[3] Reg./Par.	7701-1M (11) (279)	7701-113/7700-118 Reg./Par.	7701-3W	7701-13/7701-18[4] Reg./Par.	7701-31 (7-3/8) (187)
J1600BCH/J1601H	7701-3A		7701-123	7701-3WA		7701-31A (10-13/16) (275)

1. C to C length shown in parentheses.
2. C of connecting link to end of rod shown in parentheses.
3. Same as 7701-3 but includes 1628H soffit adapter plate.
4. Same as 7701-13 but includes 1628H soffit adapter plate.

Experience a safer and more open world

1600 SERIES
ALUMINUM STOREFRONT DOOR CLOSER

PARALLEL RIGID ARM ASSEMBLIES

Non-Hold Open Arm

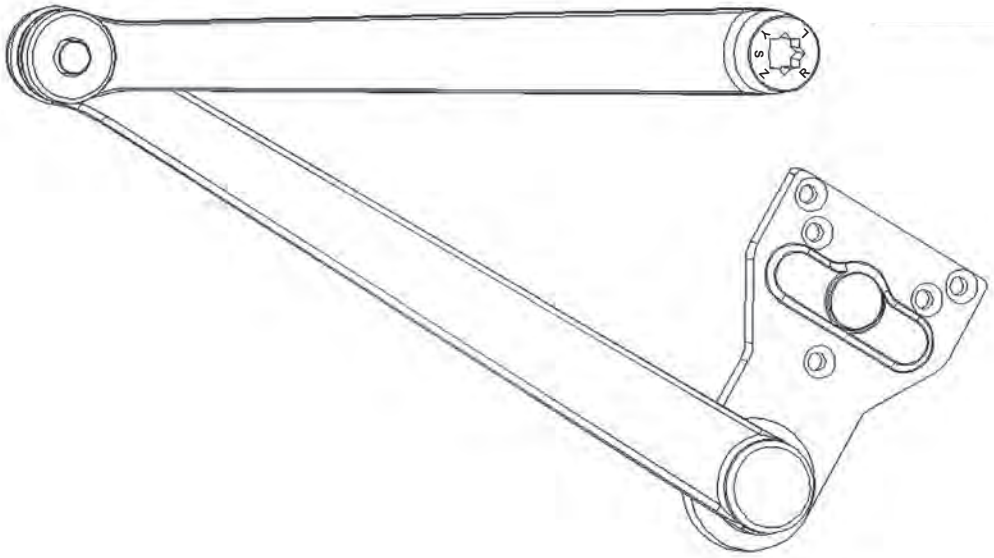

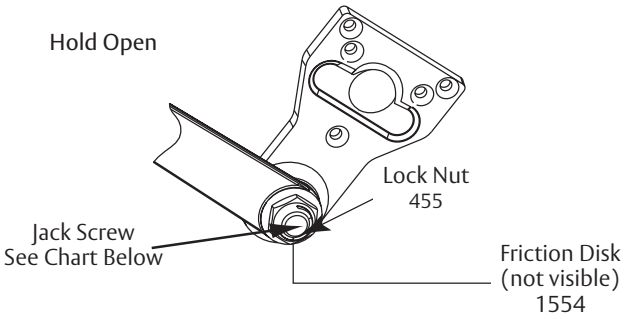

Note: Mounting hardware included with all parts orders.

Complete Arm Assembly	Arm Function	Jack Screw
PR7701-5	Non-Hold Open	N/A
PR7701-8R (right hand)	Hold Open	1543R
PR7701-8L (left hand)		1543L

NORTON RIXSON

ASSA ABLOY

1600 SERIES
ALUMINUM STOREFRONT DOOR CLOSER

CLOSERPLUS® ARM ASSEMBLIES

Hold Open Arm shown (CLP-T)

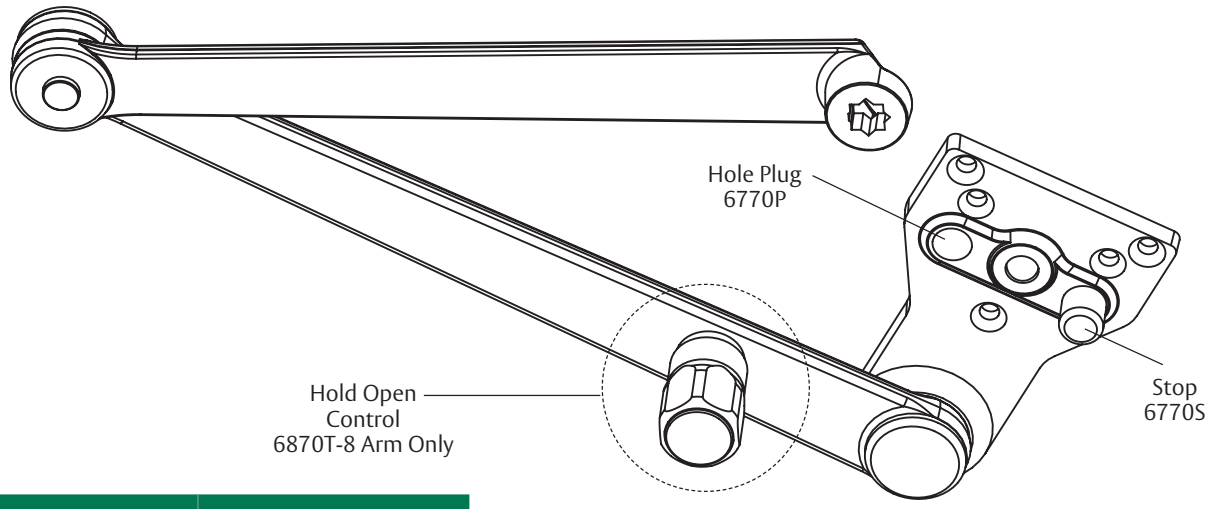

Complete Arm Assembly	Arm Function
6770-5	Non-Hold Open
6870T-8	Thumbturn Hold Open

Note: Mounting hardware included with all parts orders.

CLOSERPLUS SPRING™ ARM ASSEMBLIES

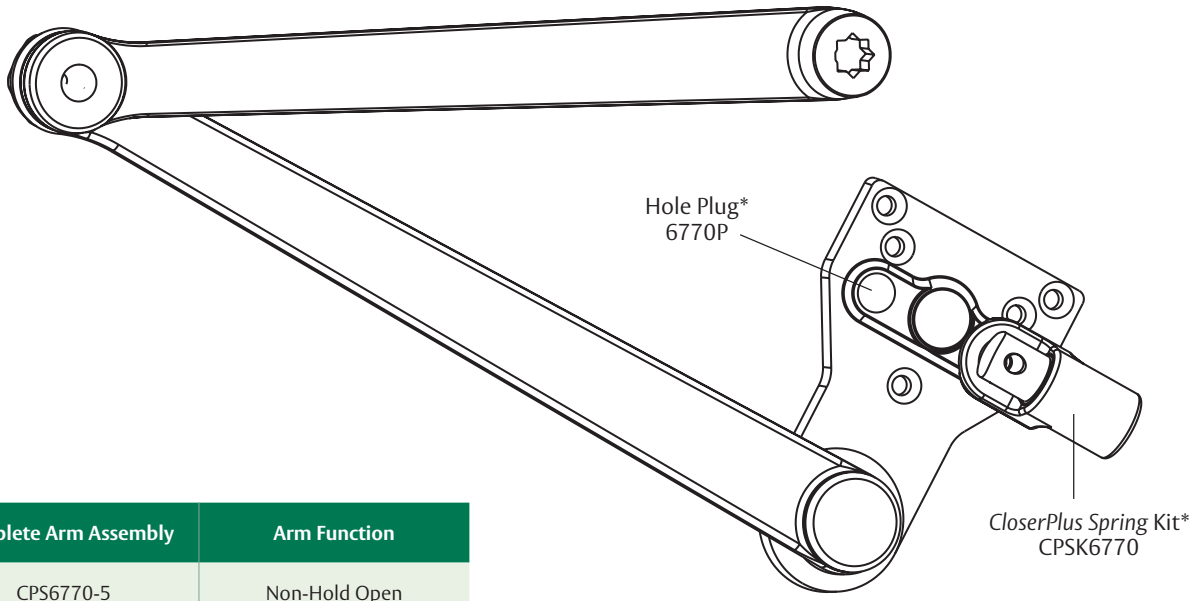

Complete Arm Assembly	Arm Function
CPS6770-5	Non-Hold Open
CPS6870T-8	Thumbturn Hold Open

Note: Mounting hardware included with all parts orders.

* These parts and screw pack are included with complete arm assemblies.

NORTON RIXSON

ASSA ABLOY

1600 SERIES
ALUMINUM STOREFRONT DOOR CLOSER

CUSHION STOP ARM ASSEMBLIES

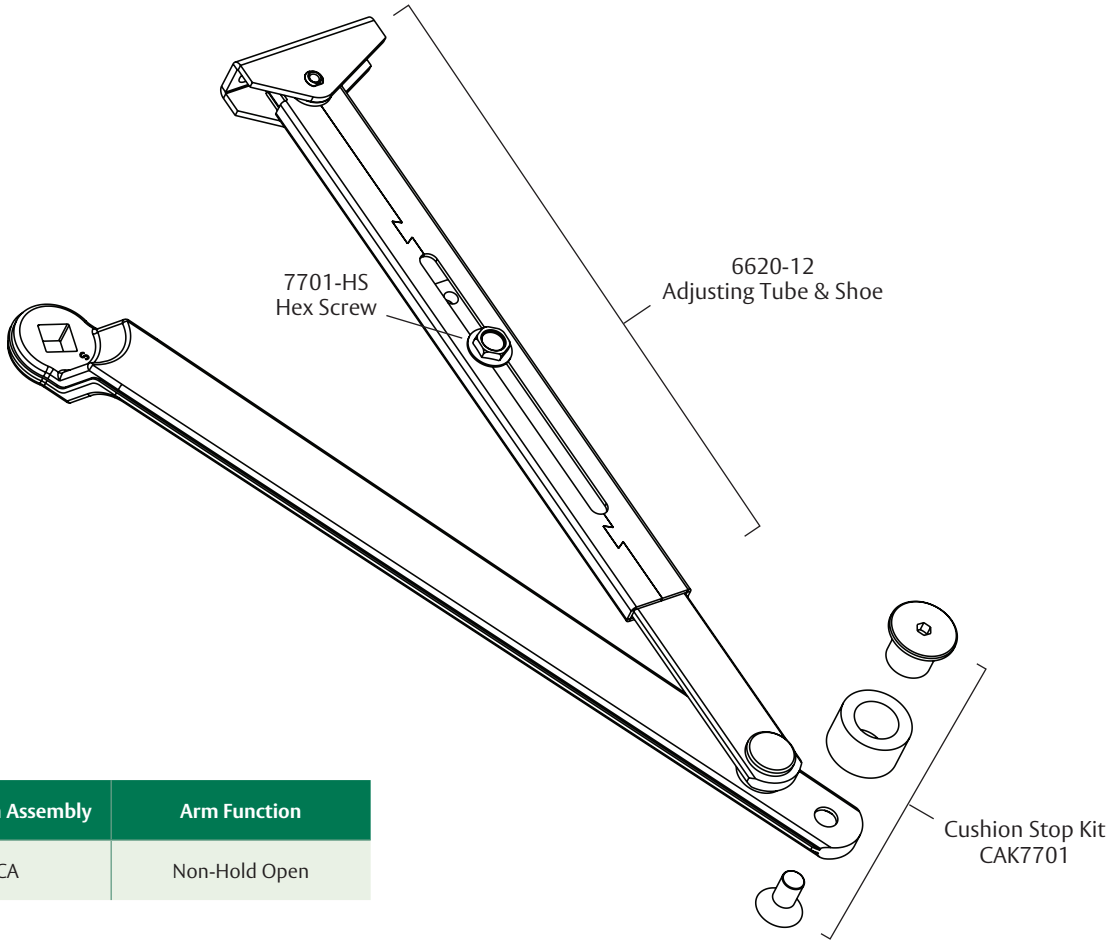

Complete Arm Assembly	Arm Function
7701-CA	Non-Hold Open

Note: Mounting hardware included with all parts orders.

NORTON RIXSON

ASSA ABLOY

1600 SERIES
ALUMINUM STOREFRONT DOOR CLOSER

UNITROL® ARM ASSEMBLIES

Top Jamb

Non-Hold Open

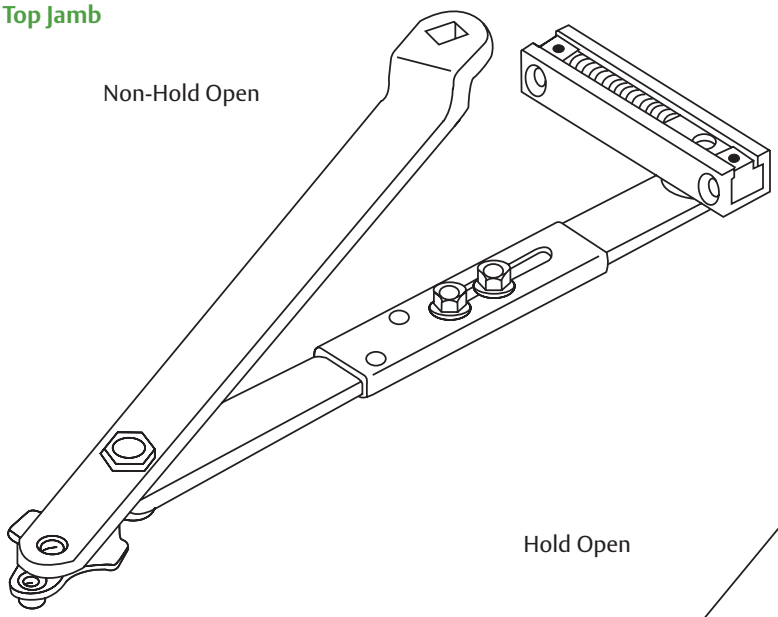

Hold Open

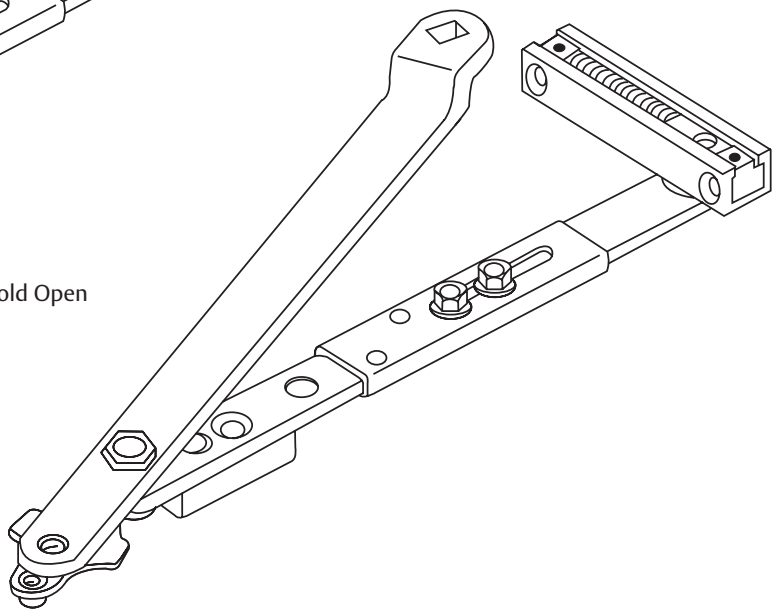

Note: Mounting hardware included with all parts orders.

Complete Arm Assembly		
Non-Hold Open	Hold Open	For Frame Reveals (mm)
J6100-4	J6100-7	2-1/8" - 3-1/4" (54 - 83)
J6200-4	J6200-7	1/2" - 2" (13 - 51)
J6400-4	J6400-7	3-3/8" - 4-1/4" (86 - 108)
J6500-41	J6500-71	4-3/8" - 5-3/8" (111 - 137)
J6500-42	J6500-72	5-1/2" - 6-3/8" (140 - 162)
J6500-43	J6500-73	6-1/2" - 7-3/8" (165 - 187)
J6600-4	J6600-7	0 - 3/8" (0 - 10)

Only available in painted finishes.

Experience a safer and more open world

1600 SERIES
ALUMINUM STOREFRONT DOOR CLOSER

UNITROL® ARM ASSEMBLIES

Parallel Arm

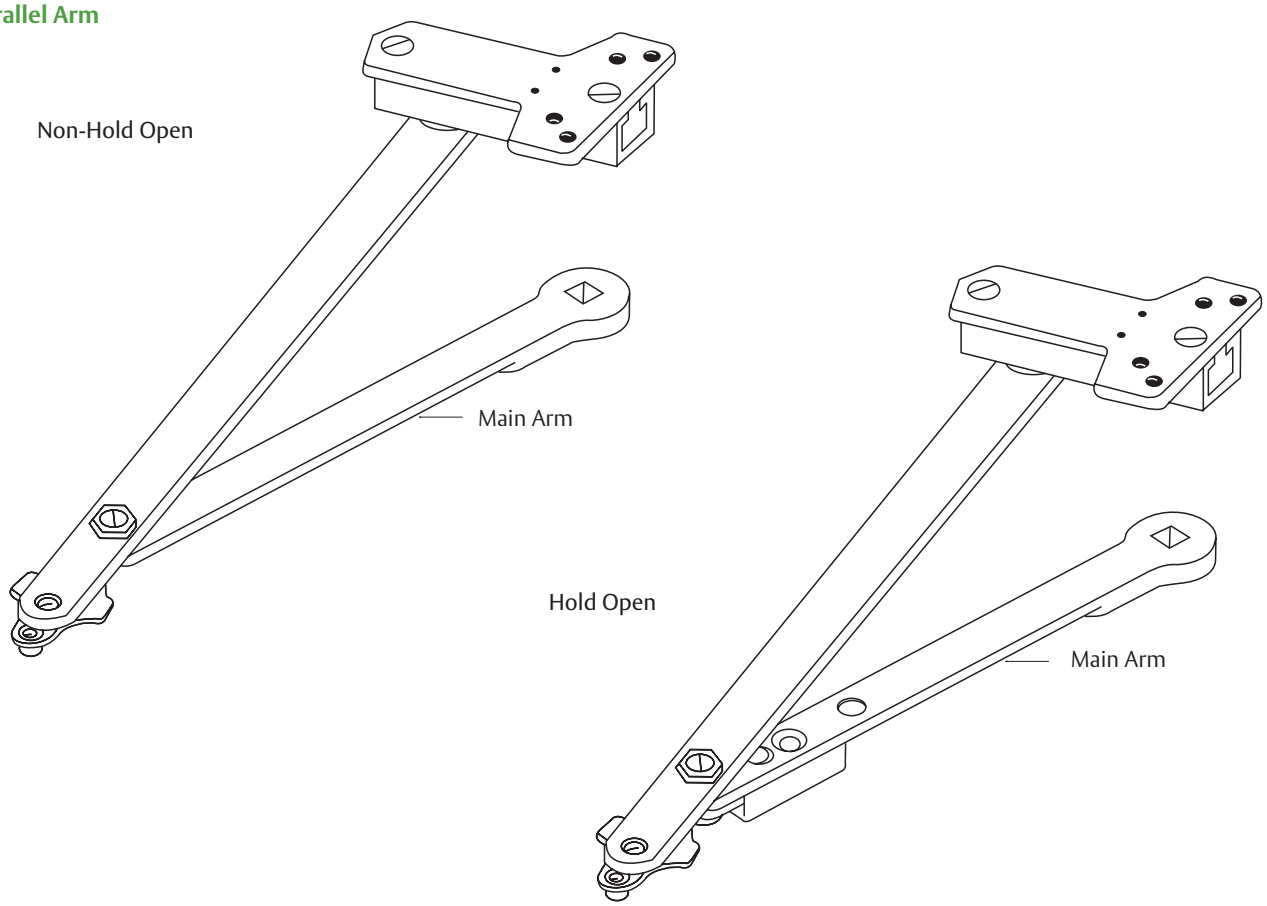

Note: Mounting hardware included with all parts orders.

Complete Arm Assembly			
Non-Hold Open	Hold Open	Door Width (cm)	Main Arm Length* (mm)
6100-11	6100-1	28" - 32" (71- 81)	9-1/2" (241)
6100-13	6100-3	33"- 41" (84 - 104)	11" (279)
6100-14	6100-4	42" - 48" (107 - 122)	12-1/2" (318)

* Center to center length.

Only available in painted finishes.

LOW PROFILE ARM ASSEMBLIES

Non-Hold Open Arm shown

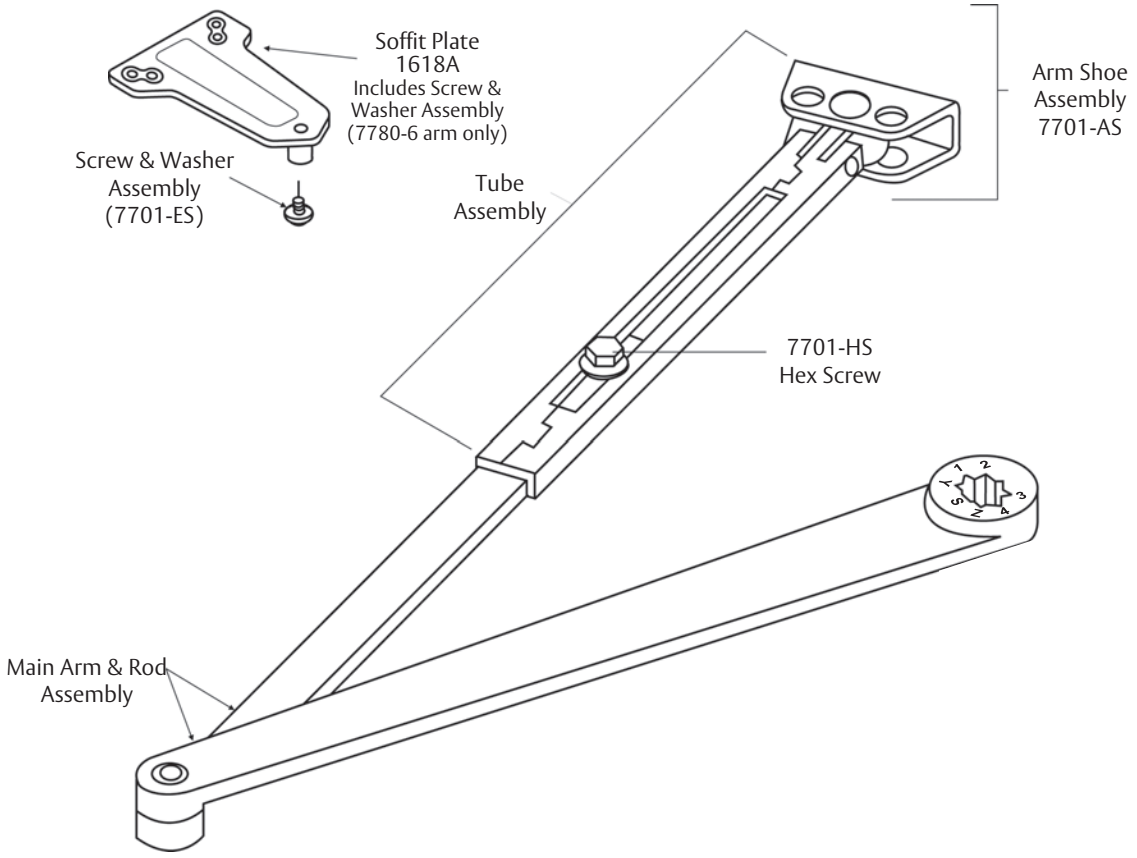

Note: Mounting hardware included with all parts orders.

Arm Application	Complete Arm Assembly	Main Arm & Adjusting Rod Assembly	Tube & Shoe/Soffit Rod Assembly
Regular Arm	7780-1	7780-1MR	7780-1TS (with 7701-AS)
Parallel Arm	7780-6		7780-6TS (with 1618A)
Tri-Style®	7780-26		

NORTON RIXSON

ASSA ABLOY

1600 SERIES
ALUMINUM STOREFRONT DOOR CLOSER

FASTENERS

Standard Fasteners	With Arms Specified Below					
	Regular Parallel & Top Jamb	Low Profile	Parallel Rigid (PR) CloserPlus (CLP) CloserPlus Spring (CPS)	Unitrol (UNI)	Unitrol-J (UNI-J)	Cushion Stop (CA)
Door						
Self Drilling Self Tapping	S	S	S	S	S	S
Machine Screw	S	S	S	S	S	S
Sleeve Nut/Sex Nut			S	S	S	
Frame						
Self Drilling Self Tapping	S	S	S	S	S	S
Machine Screw	S	S	S	S	S	S

S = Standard
Fasteners are standard (included) with closer package.
Examples:
1601 includes self drilling, self tapping and machine screws
PR1601 includes self drilling, self tapping, machine screws and sleeve nut/sex nuts

Optional Fasteners	Description	With Arms Specified Below					
		Regular Parallel & Top Jamb	Low Profile	Parallel Rigid (PR) CloserPlus (CLP) CloserPlus Spring (CPS)	Unitrol (UNI)	Unitrol-J (UNI-J)	Cushion Stop (CA)
Door							
SN^	Sleeve Nut/Sex Nut	O	O				O
TBGN^	Thru Bolts & Grommet Nuts	O	O	O	O	O	O
SMS*	Sheet Metal Screws & Machine Screws	O	O	O	O	O	O
SSPxSMS	Standard Screw Pack & Sheet Metal Screws	O	O	O	O	O	O
Frame							
SMS*	Sheet Metal Screws & Machine Screws	O	O	O	O	O	O
SSPxSMS	Standard Screw Pack & Sheet Metal Screws	O	O	O	O	O	O

O = Optional
^ When SN or TBGN are ordered, standard screw packs are also furnished.
***When SMS are ordered, standard screw packs ARE NOT furnished.**
Examples:
1601 x **SN** includes self drilling, self tapping, machine screws and sleeve/sex nuts
1601 x **SMS** includes sheet metal screws and machine screws

SN are for use on hollow metal doors and can also be used for thru bolting on wood doors. When selected, SNs are supplied for 1-3/4" (44mm) thick doors unless specified for 2-1/4" (57mm) thick doors

TBGN are an alternative to SN for wood doors. When selected, TBGNs are supplied standard for 1-3/4" (44mm) thick doors. They can be specified for 2-1/4" (57mm) thick doors.

SMS - when the option is specified, closer will be packed with sheet metal screws for the door and sheet metal screws plus machine screws for the frame.

FINISHES

Norton Rixson offers waterborne acrylic, polyster powder coat and plated finishes. Custom finishes are available on special order. A sample and approval is required.

Waterborne acrylic and polyester powder coat will withstand 100 hours of salt spray (ANSI requires 25 hours).

Specify BHMA Designation	Description
600[1]	Prime Coat
605[2]	Bright Brass
606[2]	Satin Brass
611[2]	Bright Bronze
612[2]	Satin Bronze
613E	Dark Oxidized Satin Bronze - Equivalent
619[2]	Satin Nickel
625[2]	Bright Chrome
626[2]	Satin Chrome

Specify BHMA Designation	Description	Complements the following finishes
689	Aluminum	628, 625, 629, 630, 651, 652
690	Statuary Bronze	640, 613
691	Dull Bronze	612, 637, 639
693	Black	315
694	Medium Amber	313
696	Gold	605, 606, 632, 633
BSP	Black Suede Powder	
WSP	White Suede Powder	

1 600 is a special rust-inhibiting prime coat. Closers can be ordered prime coat only (specify closer x 600). An additional charge applies if finish coat is required over prime coat.

2 Plated finish (only available on arm).

* Closer bodies and plastic covers are available in waterborne acrylic finishes. Arms are available in powder coat or plated finishes.

NORTON RIXSON

ASSA ABLOY

1600 SERIES
ALUMINUM STOREFRONT DOOR CLOSER

HOW TO ORDER

For optimum protection of door and frame assemblies, always use auxiliary wall, floor, or overhead door stop.

J — **Prefixes**

1600BC series designates Tri-Style®, sized 1601 series designates Tri-Style®, multi-sized closer

- J - Top jamb installation – reveals in excess of 2-3/4 to 7"
- P - 1600BC parallel arm units requiring specialty brackets
- \- 1601 parallel arm units requiring specialty brackets

No Prefix:
- \- 1680BC low-profile closer
- \- 1601SS corrosion-resistant closer – not Tri style

- PR - Parallel Rigid arm (parallel arm only) – specify hand for hold open functions
- CLP - CloserPlus® arm (parallel arm only)
- CPS - CloserPlus Spring™ arm (parallel arm only)
- UNI - Unitrol® arm (parallel arm only - specify door width)
- UNIJ - Unitrol arm (top jamb only - specify frame reveal)
- CA - Cushion stop arm (regular arm only)

16 — **First & Second Digit**
Defines Closer Series

0 — **Third Digit**
Specifies Some Options

- 0 - Specifies standard arm
- 8 - Specifies low-profile arm (prefix "P" for parallel arm)
  NHO only

3BC — **Fourth Digit**
Specifies Closer Size

- **1** - Adjustable 1-6
- **3BC** - ANSI Size 3
- **4BC** - ANSI Size 4

H — **Suffixes**

- NONE - Non-hold open arm function
- H - Hold open arm function (specify hand when "PR" prefix is ordered)
- SS - Series 1601 only
  Corrosion-resistant closer
  Not Tri-Style Available with non-hold open adjustable arm only; for regular arm, top jamb "J" prefix or parallel arm "P" prefix
- T - Thumbturn hold open on CloserPlus® (CLP) and CloserPlus Spring™ (CPS) arms
- P - Cover

Notes:

- Before installing a door closer, verify the accessibility, fire, and life-safety requirements that are in effect. This includes the mounting height and projection into the clear opening. Check the adopted state and local building codes and consult the Authority Having Jurisdiction (AHJ)
- To maintain the warranty and ensure proper operation of the product, follow the installation instructions & templates and install on the inside of the building.
- Consult NFPA 80 for the hinge requirements on a fire door.
- Failure to use fasteners supplied with closer may void factory warranty.
- Optional fasteners are available for a variety of applications. Consult the door and frame manufacturer to ensure the proper fasteners are used to maintain certifications.
- Sizing charts are based on 1-3/4" x 7' standard weight doors swinging to 110°. Other application conditions (e.g. larger door heights or weight) may require larger size closer. Adjusting the spring power to meet the low opening force requirements of the Americans With Disabilities Act or ANSI/BHMA Standard A117.1, may not provide adequate closing power to dependably close and latch the door in some conditions (i.e. air movement from wind gusts or building stack pressure).

NORTON RIXSON

ASSA ABLOY

2800ST SERIES
CAM ACTION DOOR CLOSER

INTRODUCTION



The 2800ST Series is a cam action door closer for slide arm and track applications. The cam action design is ideal, as it provides much greater efficiency than a rack and pinion door closer for slide track applications. The cam action provides much lower opening resistance while delivering optimum closing force and control. The door closer's wide range of adjustable closing power permits use in the most demanding situations. The efficiency and flat power curve comply with the opening force requirements of the Americans with Disabilities Act (ADA).

These door closers come standard with adjustable sweep speed and latch speed, closing control and adjustable backcheck cushioning in the opening cycle. The unobtrusive design is a good choice for architects and designers.

Applications:

- Hospitals
- Universities
- Office Buildings

NORTON RIXSON

ASSA ABLOY

2800ST SERIES
CAM ACTION DOOR CLOSER

FEATURES

- Smooth operation; efficient, powerful, heavy-duty
- Easier to open than rack-and-pinion door closers with track arms
- Slide track application with regular arm operating efficiency
- Slide track standard
- Adjustable spring size 1 through 6
- Non-handed
- Push or pull side installation
- Cast aluminum body
- Hold Open; specify H suffix
- Sex nuts (optional)
- Adjustable closing force
- Adjustable closing and latching speed
- Backcheck standard
- Door size*:
  - Recommended maximum interior door width 54" (137cm)
  - Suitable for exterior and interior doors
  - Recommended maximum door weight 250lbs.
  - Standard opening range: Push Side = 140°, Pull Side = 110°

    *Note: Door openings greater than 140° for push side and 110° for pull side can be achieved when an auxiliary door stop (by others) is used. Consult factory for details and templates.
- 10-year limited warranty

CERTIFICATIONS

- ANSI/BHMA A156.4, Grade 1 BHMA CERTIFIED
- UL / cUL listed for use on fire rated doors
- UL10C listed for positive pressure fire test
- Comply with requirements for the Americans with Disabilities Act (A.D.A)

CAUTION: Door Closers for Low Opening Force Applications:

Door closers installed in openings required to meet the requirements of the Americans With Disabilities Act or ANSI/BHMA Standard A117.1, when adjusted to meet those requirements, may not provide adequate closing power to dependably close and latch the door based on opening or site conditions.

SPECIFICATIONS

Door Controls____ (interior) (exterior) swinging door(s) shall be cam and roller design contained within a precision cast aluminum housing. Door closing force shall be adjustable to ensure adequate closing control. Door closing speed shall be controlled by independent hydraulic adjustment valves in the sweep and latch range of the closing cycle. Door closer shall have an adjustable hydraulic backcheck valve to cushion the door speed if door is opened violently. Maximum door open shall be templated to (85°), (90°), (100°), (110°), conditions permitting. Door closer shall have hold open capability with an on/off selector and tension adjustment. Non-hold open units shall be U.L. Listed for self-closing door. Unit shall be in compliance with the requirements of the Americans With Disabilities Act (ADA). ANSI standards A117.1. Units shall meet C-UL US.

NORTON RIXSON

ASSA ABLOY

2800ST SERIES
CAM ACTION DOOR CLOSER

STANDARD APPLICATIONS



2800ST

Hinge (Pull) Side of Door

- Maximum interior door width 54" (137cm)
- An auxiliary stop (by others) is suggested where severe conditions exist
- 140° swing (trim permitting)

NOTE: Door openings to 160° can be achieved if an auxiliary door stop (by others) is installed to dead stop the door. Consult factory for details.

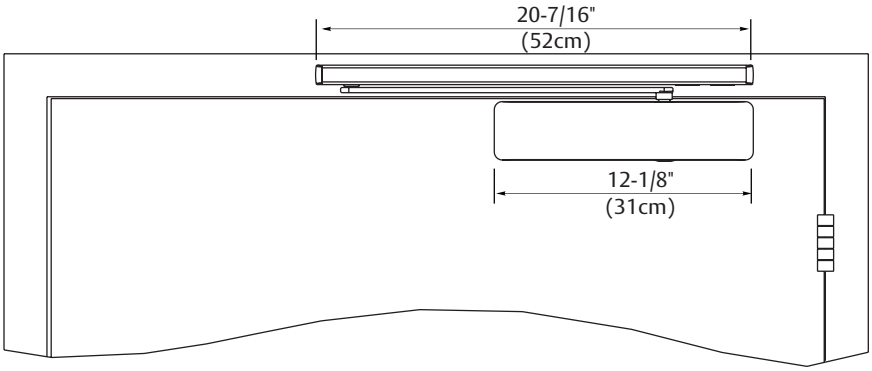

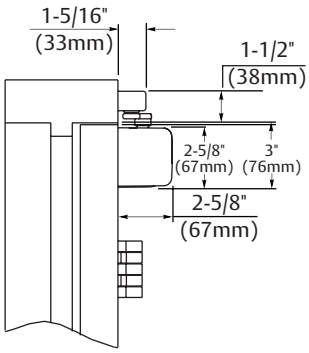

Experience a safer
and more open world

2800ST SERIES
CAM ACTION DOOR CLOSER



PS2800ST
Stop (Push) Side of Door

- Minimum frame reveal is 1-1/2" (13mm)
- An auxiliary door stop is suggested when severe conditions exist
- 110° swing (trim permitting)

NOTE: Door openings up to 130° can be achieved if an auxiliary door stop (by others) is installed to dead stop the door. Consult factory for details.

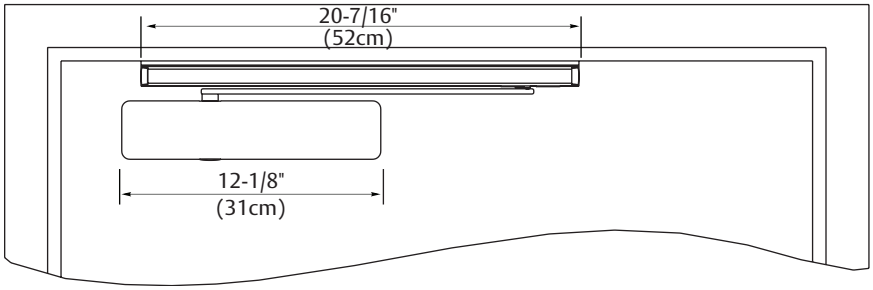

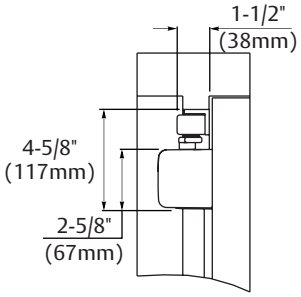

NORTON RIXSON

ASSA ABLOY

2800ST SERIES
CAM ACTION DOOR CLOSER

PARTS LIST

Part #	Description
2800LAP	Closer Body Only
28ST-1T	Pull Side Track and Arm Assembly, Non-Hold Open
28ST-3T	Pull Side Track and Arm Assembly, Hold Open
28ST-5T	Push Side Track and Arm Assembly, Non-Hold Open
28ST-8T	Push Side Track and Arm Assembly, Hold Open
2800P	Plastic Cover
28STPB	Stop Mount Track Angle Bracket
2888	Push Side Drop Plate
SP2800B	Closer Screw Pack
SP2800S	Spline Screw Pack
SP28T	Track Screw Pack
SN-134	Sex Nut Package: 1-3/4" Door Thickness
SN-214	Sex Nut Package: 2-1/4" Door Thickness



Experience a safer
and more open world

2800ST SERIES
CAM ACTION DOOR CLOSER

ACCESSORIES

Narrow Top Rail - 2888 Drop Plate: For use where the narrow top rail of the door prevents the closer from being mounted directly to the door surface. This drop plate must be used for closer mounted on a top rail between 1-7/8" and 3-3/8" (48 and 86mm) in height.



NORTON RIXSON

ASSA ABLOY

2800ST SERIES
CAM ACTION DOOR CLOSER

HOW TO ORDER

Prefixes | **2800ST** Defines Closer Series | X | **Suffix** | X | **689** **Finish**

No Prefix – Pull Side Installation
PS – Push Side Installation

No Suffix – Non-Hold Open
H – Hold Open

FINISHES

Product will be sprayed with a combination of waterborne acrylic and polyester powder coat.

Description	Specify Designation (BHMA)	Complements the following finishes
Aluminum	689	628, 625, 629, 630, 651, 652
Statuary Bronze	690	640, 613
Dull Bronze	691	612, 637, 639
Black	693	315
Medium Amber	694	312
Gold	696	605, 606, 632, 633
Dark Oxidized Satin Bronze Equivalent	613E	
Black Suede Powder	BSP	
White Suede Powder	WSP	

NOTE:

- Before installing a door closer, verify the accessibility, fire, and life-safety requirements that are in effect. This includes the mounting height and projection into the clear opening. Check the adopted state and local building codes and consult the Authority Having Jurisdiction (AHJ)
- To maintain the warranty and ensure proper operation of the product, follow the installation instructions & templates and install on the inside of the building.
- Consult NFPA 80 for the hinge requirements on a fire door.
- Failure to use fasteners supplied with closer may void factory warranty.
- Optional fasteners are available for a variety of applications. Consult the door and frame manufacturer to ensure the proper fasteners are used to maintain certifications.
- Sizing charts are based on 1-3/4" x 7' standard weight doors swinging to 110°. Other application conditions (e.g. larger door heights or weight) may require larger size closer. Adjusting the spring power to meet the low opening force requirements of the Americans With Disabilities Act or ANSI/BHMA Standard A117.1, may not provide adequate closing power to dependably close and latch the door in some conditions (i.e. air movement from wind gusts or building stack pressure).

9300BC SERIES
LIGHT COMMERCIAL DOOR CLOSER

INTRODUCTION

The 9300BC Series is a durable, economically priced door closer designed for commercial exterior and interior doors such as storefront and industrial applications.



FEATURES

- Spring size 3, 4
- Separate and independent valve for sweep speed and latch speed
- Adjustable backcheck standard
- Regular and top jamb mounting

CERTIFICATIONS

- ANSI/BHMA A156.4, Grade 3
- UL / cUL listed for use on fire rated doors
- UL10C listed for positive pressure fire test
- This product is manufactured in an ISO 9001, ISO 14001 facility
- UL certified environmental product declaration

NORTON RIXSON

ASSA ABLOY

9300BC SERIES
LIGHT COMMERCIAL DOOR CLOSER

EXPLANATION OF FEATURES

Aluminum Alloy Housing
Closer bodies are constructed of a special aluminum alloy, carefully selected to accommodate interactive steel components and operating conditions.

Rack & Pinion Operation
Provides a smooth constant control of the door through its full opening and closing cycle. 180° door swing can be achieved when door, frame, hardware and arm function do not interfere.

Non-Handed
Pinion shaft extends vertically through the closer body in both directions. This permits the closer to be positioned on either right or left-hand doors for most applications.

Non-Critical Control Valves
All control valves for sweep speed, latch speed and backcheck cushioning are noncritical and are adjusted by a standard 1/8" (3mm) hex wrench.

Adjustable Backcheck Cushion Valve
Provides control of the door in the opening cycle, beginning at approximately 75° of door opening. It slows/cushions the door opening, when the door is forcibly opened beyond its pre-adjusted speed limitation.

Finishes
All door closers are painted in waterborne acrylics. All steel parts, mounting plates and brackets are powder coated. The closers will withstand 120 hours of salt spray. ANSI requires 25 hours.

Adjust Power Shoe
Supplied as standard for a 15% (±7-1/2%) power adjustment by relocating the forearm at the shoe, for regular arm and top jamb non-hold open installations.

OPTIONAL FEATURES

Hold Open Arm
Closer arm has adjustable hold open feature (90° to 180°). This arm is non-handed. Order by suffixing "H" to the catalog number.

- Parallel mount (prefix P to model number)
- Friction hold open arm

Fasteners

Type	Description	Applications		
		RA	PA	TJ
DOOR				
SDST	Self-Drilling Self-Tapping Screws	S	S	S
MS	Machine Screws	S	S	S
SN	Sex Nuts	O	O	O
TBGN	Through-Bolts & Grommet Nuts	O	O	O
FRAME				
SDST	Self-Drilling Self-Tapping Screws	S	S	S
MS	Machine Screws	S	S	S

S = standard; O = optional

SN are for use on unreinforced hollow metal doors or to prevent any hollow metal door from collapse/dimpling. They can also be used for thru bolting on wood doors. **When selected as an add-on option,** SN are supplied for 1-3/4" (44mm) thick doors unless specified for 2-1/4" (57mm) thick doors.

TBGN are an alternative to SN for wood doors. **When selected as an add-on option,** TBGN are supplied standard for 1-3/4" (44mm) thick doors. They can be specified for 1-3/8" (35mm) thick doors.

9300BC SERIES
LIGHT COMMERCIAL DOOR CLOSER

APPLICATIONS



Regular Arm
This is the only pull-side application for the 9300BC series door closer. It is the most power-efficient application for a door closer. Sufficient frame, door and/or ceiling clearance must be considered. Since the arm assembly projects directly out from the frame, this application may present an aesthetics issue or be prone to vandalism.



Parallel Arm
This application provides the most appealing design appearance for the 9300BC series door closer. It is on the push side of the door and the arm assembly extends almost parallel to the door. In the closed position, there is very little or no hardware projecting beyond the frame face in most situations.

Due to the geometry of the arm it is approximately 25% less power efficient than a regular arm application.

The entire closer and arm assembly are mounted below the frame stop, requiring a top rail clearance on the door of 5" (127mm), without using a drop plate. A 9388 drop plate requires a top rail clearance of just 2-5/8" (67mm).

NORTON RIXSON

ASSA ABLOY

9300BC SERIES
LIGHT COMMERCIAL DOOR CLOSER



Top Jamb
For efficiency reasons this application provides the best alternative to the regular arm application. There must be sufficient frame face and/ or ceiling clearance for this application. It requires a top rail on the door of just 1-7/8" (48mm). This application provides the best door control for doors in exterior walls that swing out of a building. It will accommodate frame reveals to a maximum of 2-7/8" (73mm). The entire door closer and arm assembly project from the frame, similar to the regular arm application, where matters of appearance can be of concern.

9300BC SERIES
LIGHT COMMERCIAL DOOR CLOSER

REGULAR ARM

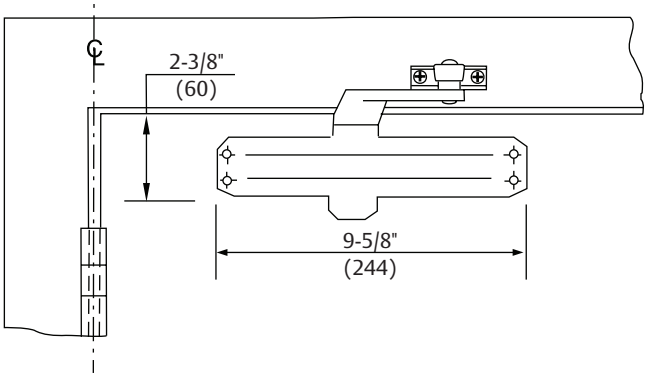

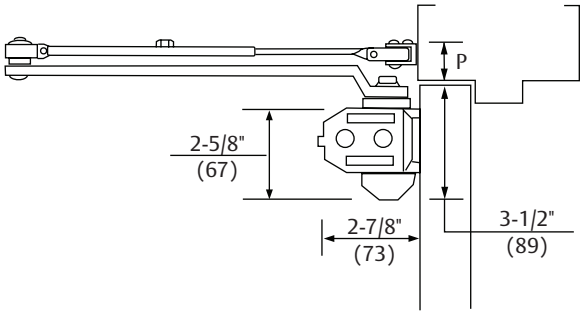

Door openings to 180° can be obtained if conditions permit. For selection of door closer sizing, see charts on page 180.

Mounting holes on body are spaced centerline to centerline: 9-1/16" (230mm) horizontally x 3/4" (19mm) vertically.

P Minimum Ceiling Clearance Inches (mm)	
Non-Hold Open	Hold Open
1-1/2" (38)	1-5/8" (41)

PARALLEL ARM

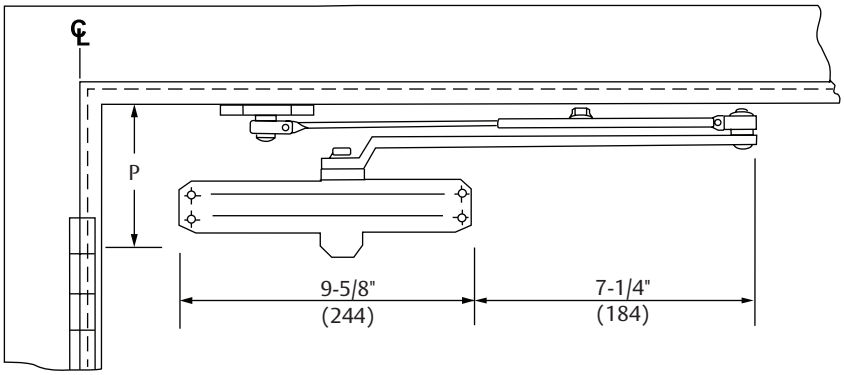

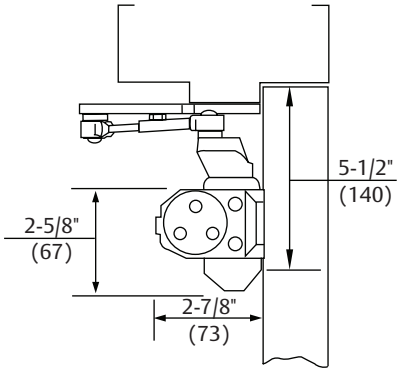

Mounting holes on body are spaced centerline to centerline: 9-1/16" (230mm) horizontally x 3/4" (19mm) vertically.

R Minimum Top Rail 5/8" (16mm) Frame Stop Inches (mm)	
Without Drop Plate	With 9388 Drop Plate
5" (127)	2-5/8" (67)

NORTON RIXSON

ASSA ABLOY

9300BC SERIES
LIGHT COMMERCIAL DOOR CLOSER

TOP JAMB

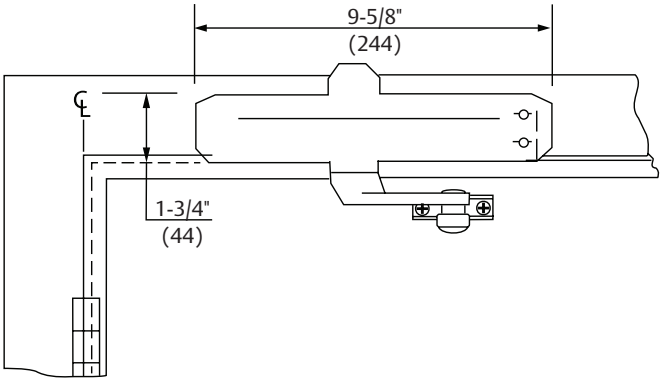

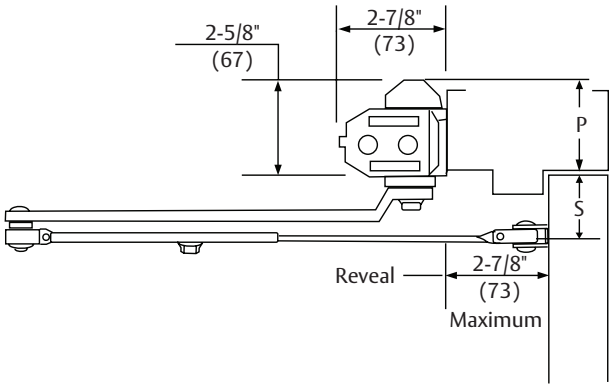

For selection of door closer sizing, see charts below.

Mounting holes on body are spaced centerline to centerline: 9-1/16" (230mm) horizontally x 3/4" (19mm) vertically.

P Minimum Ceiling Clearance Inches (mm)		S Minimum Top Rail Clearance Inches (mm)	
Without Drop Plate	With 9388 Drop Plate	Without Drop Plate	With 9388 Drop Plate
2-5/8" (67)	1-3/4" (44)	1-7/8" (48)	3-3/8" (86)

DOOR CLOSER SIZE

Note: Door closing force is not adjustable. Correct size must be selected.

Interior Doors

Door Closer Size	Recommended Max. Door Width Inches (mm)		
	Regular Arm	Top Jamb	Parallel Arm
9303BC	40" (102)	40" (117)	38" (97)
9304BC	48" (122)	48" (122)	46" (117)

Exterior Doors

Door Closer Size	Recommended Max. Door Width Inches (mm)		
	Regular Arm	Top Jamb	Parallel Arm
9303BC	34" (86)	34" (86)	32" (81)
9304BC	40" (102)	40" (102)	36" (91)

All dimensions are for reference only and are in inches (mm) unless otherwise noted.

9300BC SERIES
LIGHT COMMERCIAL DOOR CLOSER

TOP JAMB

Closer Mounting Plate

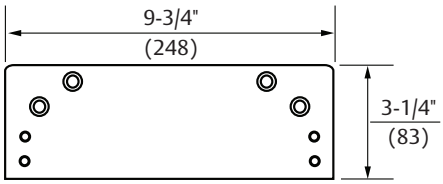

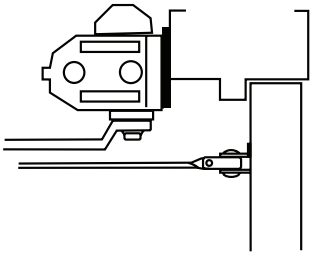

Top Jamb - 9388 Drop Plate: For use when the door closer interferes with the ceiling or the frame face is too narrow to mount a closer body. This drop plate can be used to mount a closer on a frame face as narrow as 1-1/2" (38mm).

PARALLEL ARM

Closer Mounting Plate

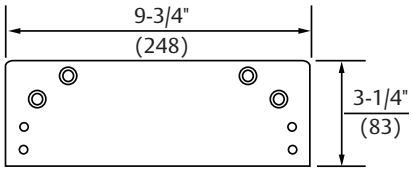

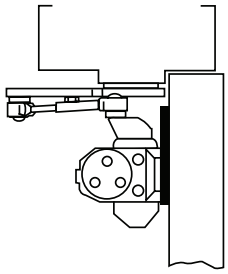

Parallel Arm - 9388 Drop Plate: For use where a narrow top rail prevents the closer from being mounted directly to the door surface. This drop plate can be used to mount a closer on a top rail as narrow as 2-5/8" (57mm).

NORTON RIXSON

ASSA ABLOY

9300BC SERIES
LIGHT COMMERCIAL DOOR CLOSER

BRACKETS

Non-Hold Open Arms

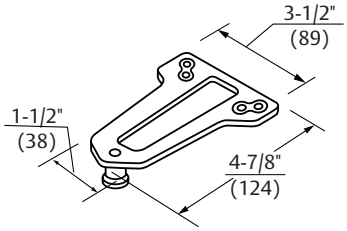

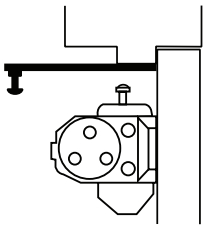

9318A Soffit Plate: This soffit plate is supplied to permit parallel arm mounting. It can be mounted where the frame soffit is as narrow as 1" (25mm).

Hold Open Arms

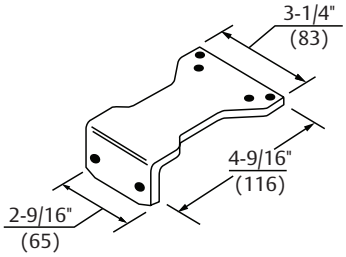

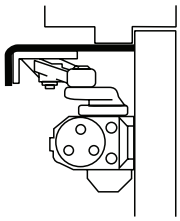

9328H Adapter Plate: This adapter plate is supplied standard with parallel arm hold open closer. It can also be used to convert hold open arms for parallel arm installation. It can be mounted where the frame soffit is as narrow as 1" (25mm).

CLOSER BODIES

Model Number
9303BCLAP
9304BCLAP

9300BC SERIES
LIGHT COMMERCIAL DOOR CLOSER

NON -HOLD OPEN ARM ASSEMBLIES

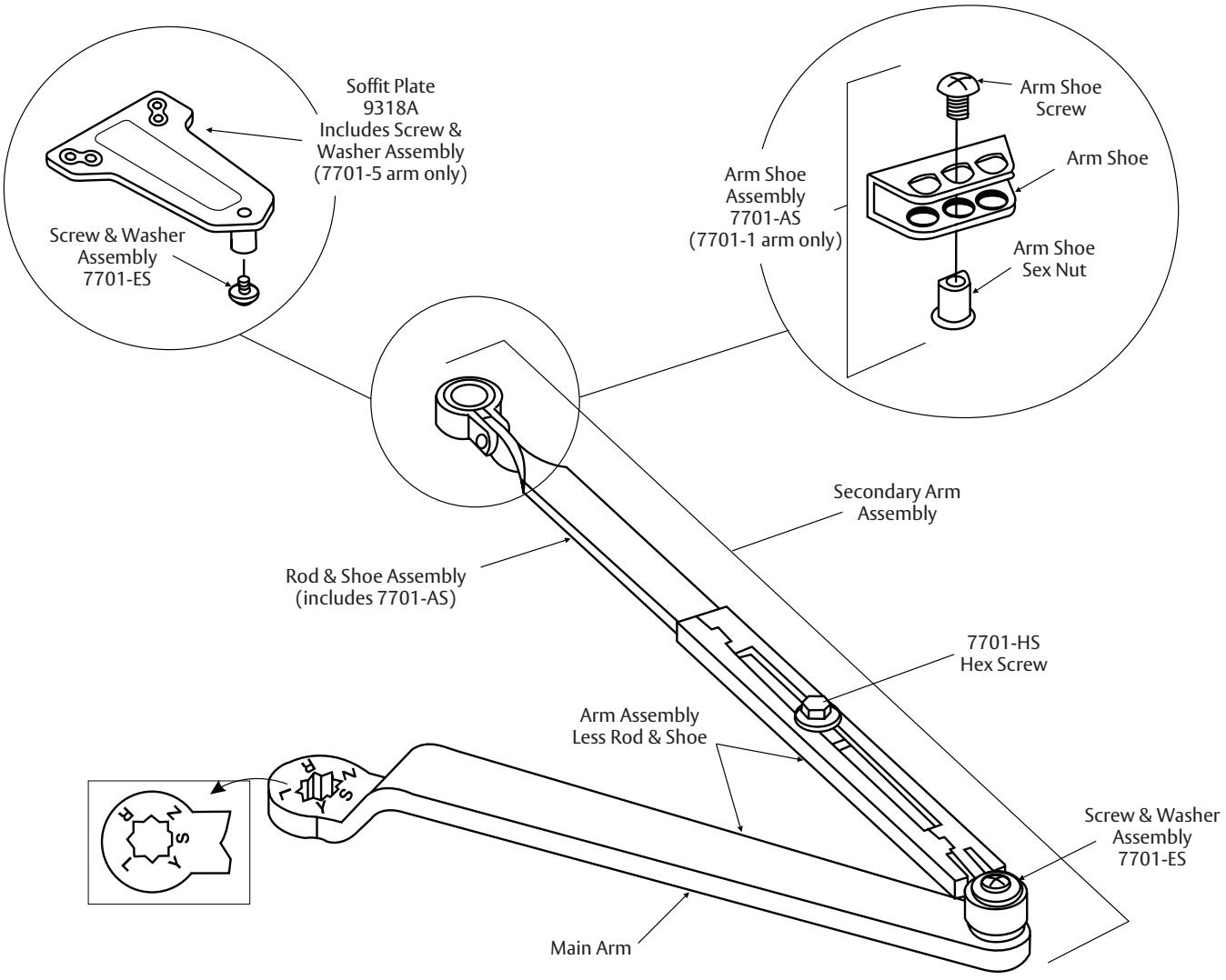

Closer Series	Complete Arm	Main Arm	Arm Assembly Less Rod and Shoe	Secondary Arm Assembly	Rod & Shoe Assembly
9300BC	7701-1	7701-1M	7701-1W	7701-111	7701-11
P9300BC	7701-5			7701-115	7701-15

9300BC SERIES
LIGHT COMMERCIAL DOOR CLOSER

HOLD OPEN ARM ASSEMBLIES

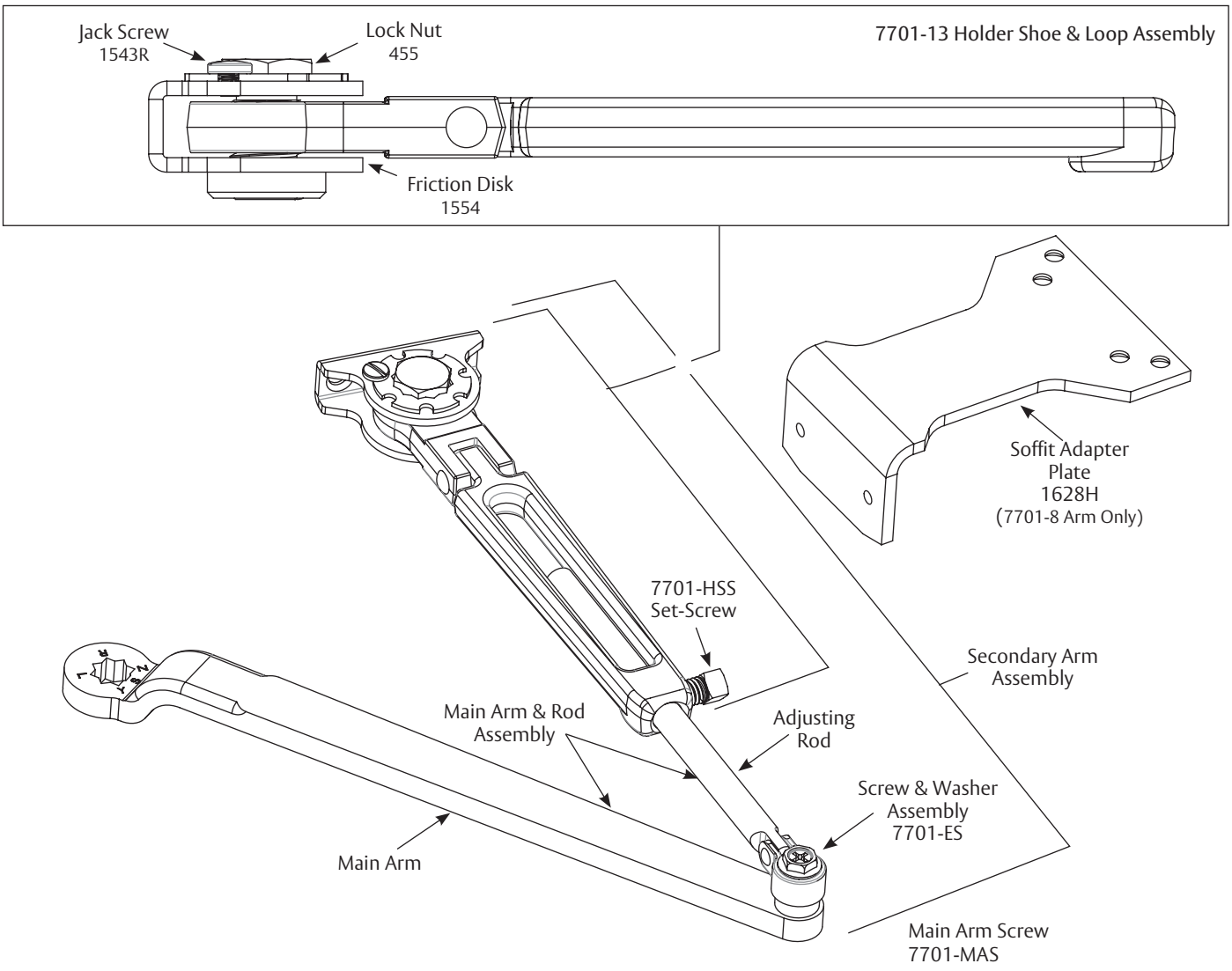

Closer Series	Complete Arm	Secondary Arm Assembly
9300BCH	7701-3	7701-113
P9300BCH	7701-8	7701-118

9300BC SERIES
LIGHT COMMERCIAL DOOR CLOSER

HOW TO ORDER

P – **Prefixes**

930 – **First, Second & Third Digits**
Defines Closer Series

3 – **Fourth Digit**
Specifies Closer Size

"3" - ANSI size 3
"4" - ANSI size 4

BC
Adjustable backcheck cushioning (Standard)

H – **Suffix**

H – Hold open arm (Optional)

No Prefix – Regular and top jamb mount
P – Parallel arm only

FINISHES

Description	ANSI/BHMA	Complements the Following Finishes
Aluminum	689	628, 625, 629, 630, 651, 652
Statuary Bronze	690	640, 613
Dull Bronze	691	612, 637, 639
Black	693	315
Medium Amber	694	312
Gold	696	605, 606, 632, 633
Prime Coat	600*	—
Dark Oxidized Satin Bronze Equivalent	613E	—
Black Suede Powder	BSP	—
White Suede Powder	WSP	—

*600 is a special rust inhibiting prime coat. Closers can be ordered prime coat only (specify closer x 600). An additional charge applies if finish coat is required over prime coat (ex: 9303BC x 600 x 690).

NOTES:

- Before installing a door closer, verify the accessibility, fire, and life-safety requirements that are in effect. This includes the mounting height and projection into the clear opening. Check the adopted state and local building codes and consult the Authority Having Jurisdiction (AHJ)
- To maintain the warranty and ensure proper operation of the product, follow the installation instructions & templates and install on the inside of the building.
- Consult NFPA 80 for the hinge requirements on a fire door.
- Failure to use fasteners supplied with closer may void factory warranty.
- Optional fasteners are available for a variety of applications. Consult the door and frame manufacturer to ensure the proper fasteners are used to maintain certifications.
- Sizing charts are based on 1-3/4" x 7' standard weight doors swinging to 110°. Other application conditions (e.g. larger door heights or weight) may require larger size closer. Adjusting the spring power to meet the low opening force requirements of the Americans With Disabilities Act or ANSI/BHMA Standard A117.1, may not provide adequate closing power to dependably close and latch the door in some conditions (i.e. air movement from wind gusts or building stack pressure).

NORTON RIXSON

ASSA ABLOY

78-B/F SERIES
TRADITIONAL DOOR CLOSERS

INTRODUCTION

The 78-B/F Series is a surface closer with traditional styling that offers multiple sizes within a single size aluminum alloy shell. Templates for installing this closer are the same for all closer sizes. Only two springs are needed for 78-B/F closers to accommodate the complete range of door sizes. These can also be adjusted to meet the exact power requirements of the application.



FEATURES

- Choice of adjustable spring power
  - B/D - Spring size 2, 3, or 4
  - E/F - Spring size 5 and 6
- Handed (closer spring can be reversed in the field)
- Heavy-duty arms available: Parallel Rigid and Unitrol®
- 10-year limited warranty

78-B/F SERIES
TRADITIONAL DOOR CLOSERS

OVERVIEW

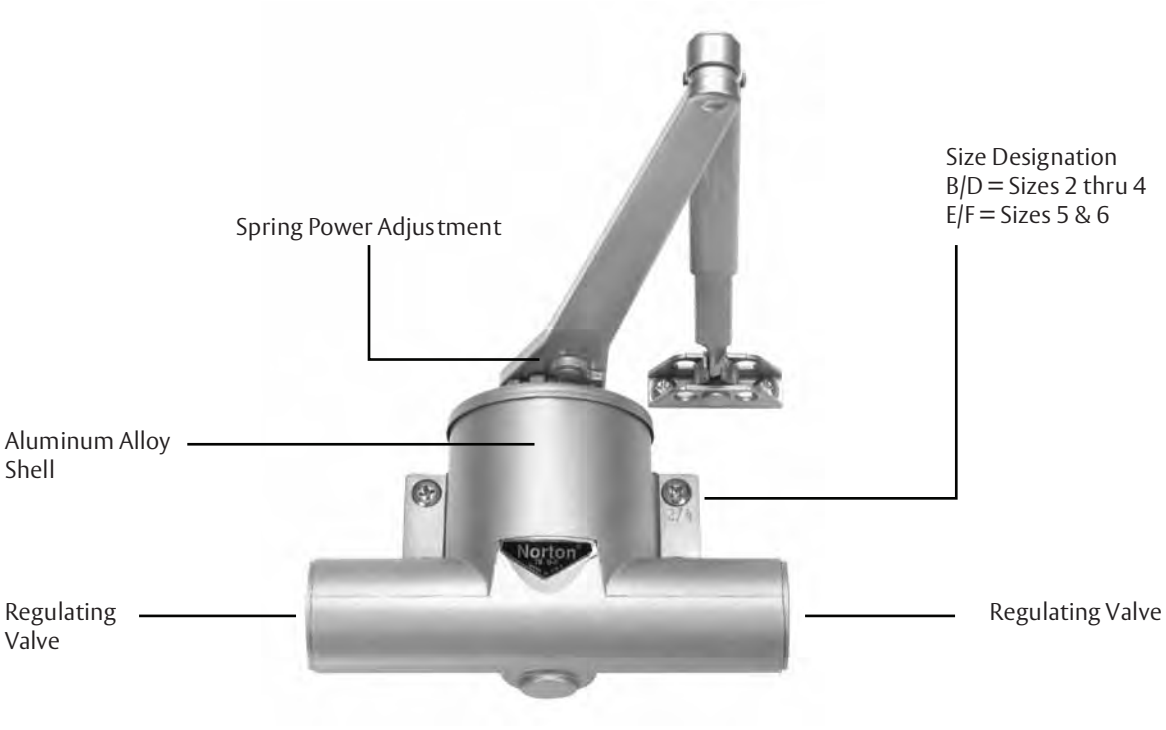

CERTIFICATIONS

- UL / cUL listed for use on fire rated doors
- UL10C listed for positive pressure fire test
- This product is manufactured in an ISO 9001, ISO 14001 facility
- Listed by the New York City Materials and Equipment Acceptance Division

EXPLANATION OF FEATURES

Aluminum Alloy Shell

Closer shells are constructed of a special aluminum alloy, carefully selected to accommodate individual closer characteristics and operating conditions.

Adjustable Spring Power

Clock-type coil spring affords a wide range of closer power. Permits a fine adjustment of the closer to the environment.

Rack & Pinion Operation

Provides a smooth transmission of power for control of the door through its full opening and closing cycle.

Adjustable Sweep/Latch Speed

A dual purpose regulating valve, hex-key operated, permits independent adjustment of both sweep and latch speed.

Adjustable Backcheck Cushioning

An independent regulating valve, hex-key operated, provides an adjustable hydraulic cushion to the door opening speed toward the end of the opening cycle. This feature is standard with all but delayed action closers. Backcheck is not available with delayed action closers.

Non-Hold Open Arm

Standard closer will be supplied with a non-hold open arm. This arm is non-handed (field reversible).

Hold Open Arm

Available with heavy-duty arms (Parallel Rigid and Unitrol)

Warranty

Limited ten-year warranty for defects and life of the building on the aluminum housing.

Field Reversible

Closer spring can be field-reversed to accommodate the hand of the door. It is recommended that wherever possible the closer be ordered handed. Parallel hold open arms and delayed action closers **are not reversible.**

Spring Power

Choice of adjustable spring power: B/D - Spring size 2, 3, or 4 E/F - Spring size 5 and 6

78-B/F SERIES
TRADITIONAL DOOR CLOSERS

OPTIONAL FEATURES

Adjustable Delayed Action Closing* (supplied in lieu of backcheck feature)

An optional hydraulic feature that adds a third speed range to the closing cycle. This feature becomes effective when the door is opened and released at any point beyond 70°. The amount of time delay depends upon the combination of the angle of door release and valve adjustment. The valve can be adjusted with a 1/8" (3mm) hex-key from no delay time up to maximum delay times of:

Door Opened and Released at	Approximate Time of Delay Cycle
180°	4-5 minutes
120°	2-3 minutes
90°	25-30 seconds

* Regular arm (NHO units only) are handed - not reversible

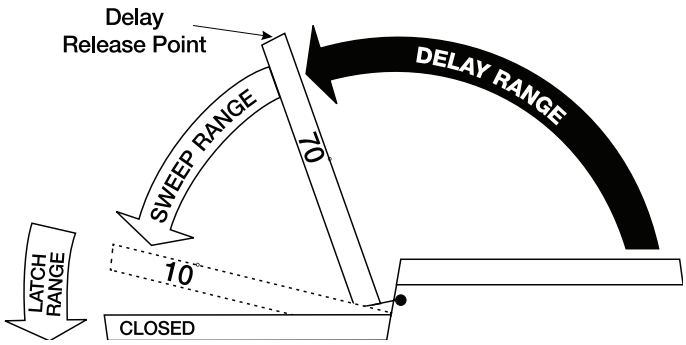

Suggested Applications

Delayed action closing allows slow moving traffic to clear the opening before the door closer's normal closing cycle begins. This feature can be helpful in health care facilities such as hospitals and nursing homes. It provides sufficient time for persons on crutches or in wheelchairs to pass through a door without concern of it closing. At the same time, it can accommodate the facility's staff with movement of food service carts, beds, and other wheeled traffic. Use of delayed action closers on many doors throughout industrial and commercial buildings can also assist the flow of traffic. Locations where additional time to clear the opening is advantageous are doors between office and factory/warehouse facilities, doors to workshops or laboratories, to kitchen and food processing areas, etc.

SPECIFICATIONS

Closer for interior (and) exterior doors shall be rack-and-pinion type enclosed in a cast aluminum alloy shell. Closer spring shall be clocktype coil spring and shall be adjustable through a wide range of closing power. Closer shall be equipped with a single hex-key operated regulating valve for control of both closing and latch speeds. Closer shall have a hex-key operated regulating valve to control the adjustable backcheck feature. Closer shall be Norton Rixson Series 78-B/F Traditional Surface Closer or equivalent.

APPLICATIONS



Regular Arm

This is the only pull-side application where a double lever arm is used. It is the most power-efficient application for a door closer. Sufficient frame, door and/or ceiling clearance must be considered. Since the arm assembly projects directly out from the frame, this application may present an aesthetics issue or be prone to vandalism. Only available with non-hold open arm.



Parallel Arm

This application provides the most appealing design appearance for a surface mounted door closer having a double lever arm. This also makes it beneficial in vandalism-prone areas. It is on the push side of the door and the arm assembly extends almost parallel to the door. In the closed position, there is very little or no hardware projecting beyond the frame face in most situations.

Due to the geometry of the arm it is approximately 25% less power efficient than a regular arm application. The entire closer and arm assembly are mounted below the frame stop, requiring a top rail of 5-3/8" (137mm) to mount the body. Clearance to the bottom of the closer body from the top of the door is 7-3/8" (187mm). (Based on 5/8" (16mm) high frame stop.) Only available with non-hold open arm.

NORTON RIXSON

ASSA ABLOY

78-B/F SERIES
TRADITIONAL DOOR CLOSERS

APPLICATIONS

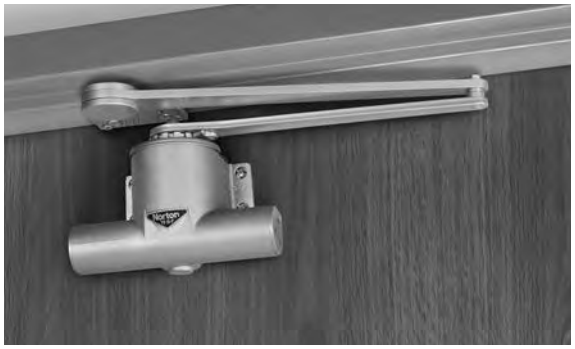

Parallel Rigid Arm

An enhanced variation of the standard parallel arm assembly that is intended for use in heavy traffic areas where auxiliary door stops are installed. Hold open available – specify hand when ordering.



Unitrol® Arm (Parallel Arm applications only)

Unitrol arms combine the features of a double lever arm overhead door stop/holder with the backcheck feature of the door closer to reduce door stopping shock loads to a minimum. The Unitrol uses a compression spring buffer at the soffit plate/arm shoe that will absorb 30 lbs. of force, 5° prior to the door's dead stop. Coupled with the door closer's backcheck feature, this arm provides the most controlled stop available with a surface door closer.

For parallel arm applications there are three different length arm assemblies. Each length is designed for a specific range of door widths, to provide precise door control. This further lessens the dead stop impact on the door's hinges/ pivots.

Only available in painted finishes.

REGULAR ARM

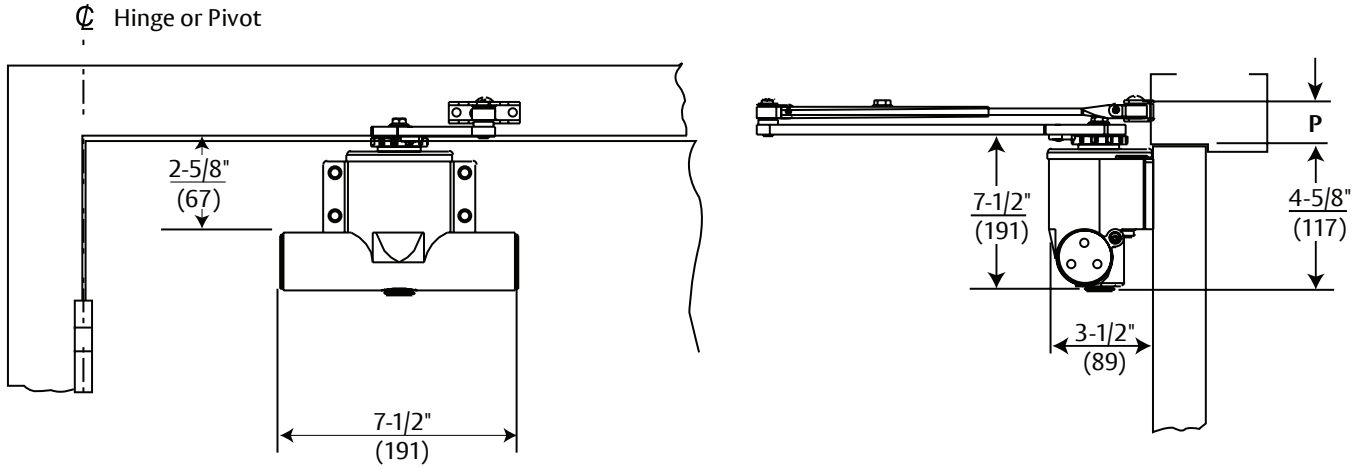

Body mounting holes are spaced 4-1/8" (105mm) horizontally and 1-3/8" (76mm) vertically.

Maximum Door Size Wood or Metal Inches (cm)		Model Number
Interior	Exterior	Non-Hold Open
48" (122)	36" (91)	78B/D-RA
—	44" (112)	78E/F-RA

P Minimum Ceiling Clearance
Non-Hold Open
1-1/2" (38)

All dimensions are for reference only.

NORTON RIXSON

ASSA ABLOY

78-B/F SERIES
TRADITIONAL DOOR CLOSERS

PARALLEL ARM

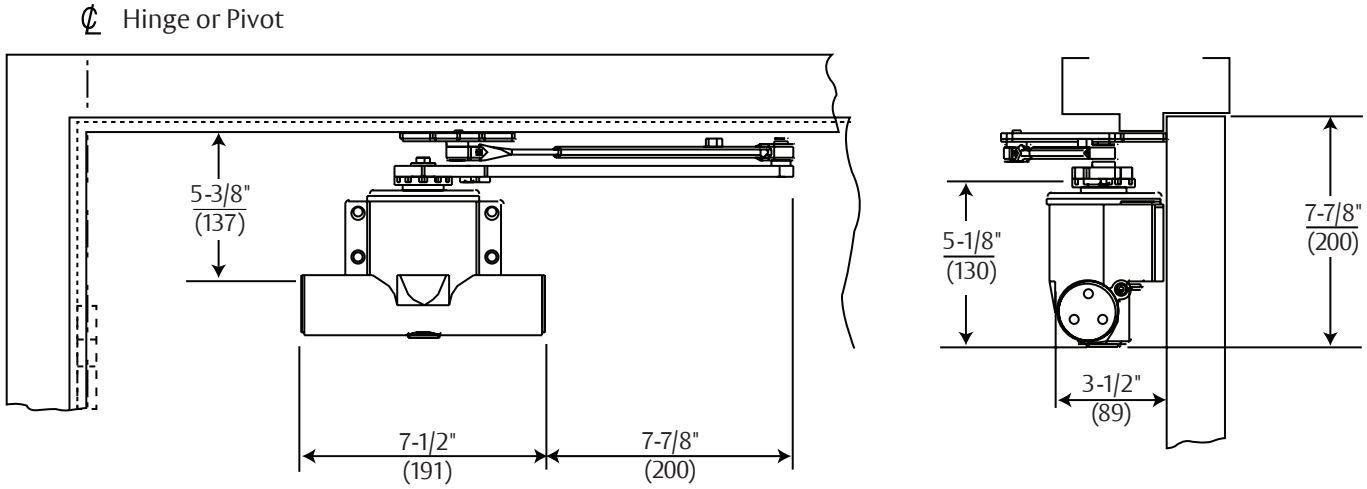

Body mounting holes are spaced 4-1/8" (105mm) horizontally and 1-3/8" (76mm) vertically.

Maximum Door Size Wood or Metal Inches (cm)		Model Number
Interior	Exterior	Non-Hold Open
42" (107)	36" (91)	78B/D-PA
—	44" (112)	78E/F-PA

All dimensions are for reference only.

PARALLEL RIGID ARM

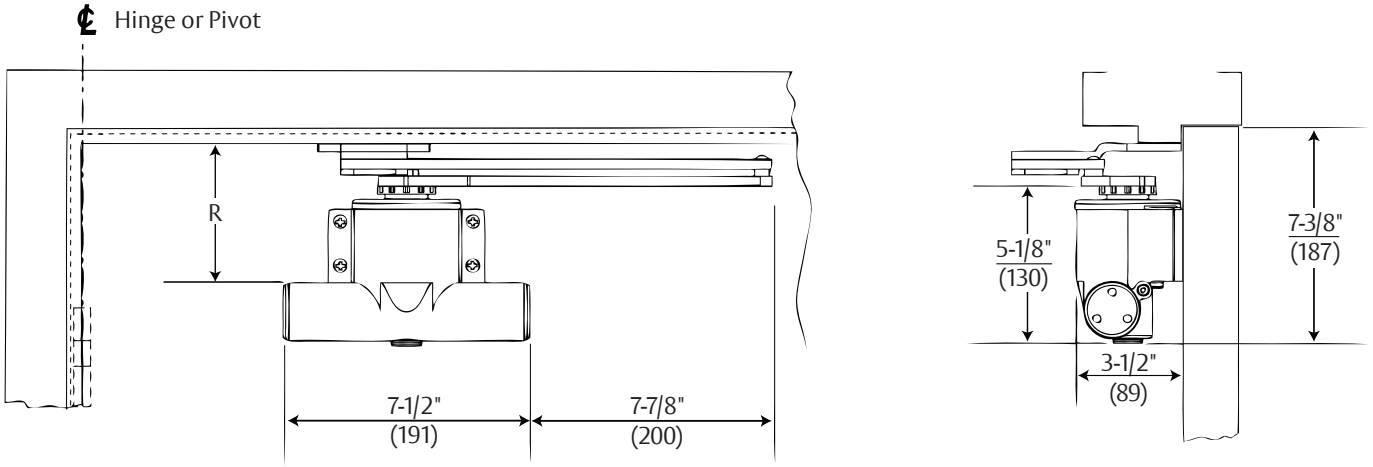

Body mounting holes are spaced 4-1/8" (105mm) horizontally and 1-3/8" (76mm) vertically.

Maximum Door Size Wood or Metal Inches (cm)		Model Number	
Interior	Exterior	Non-Hold Open	Hold Open
48" (122)	36" (91)	78B/D-PRA	78B/D-PRHA
—	44" (112)	78E/F-PRA	78E/F-PRHA

R Minimum Top Rail 5/8" (16mm) frame stop	
Without Drop Plate	With 88 Drop Plate
5-3/8" (137)	2-1/2" (64)

NORTON RIXSON

ASSA ABLOY

78-B/F SERIES
TRADITIONAL DOOR CLOSERS

UNITROL® ARM

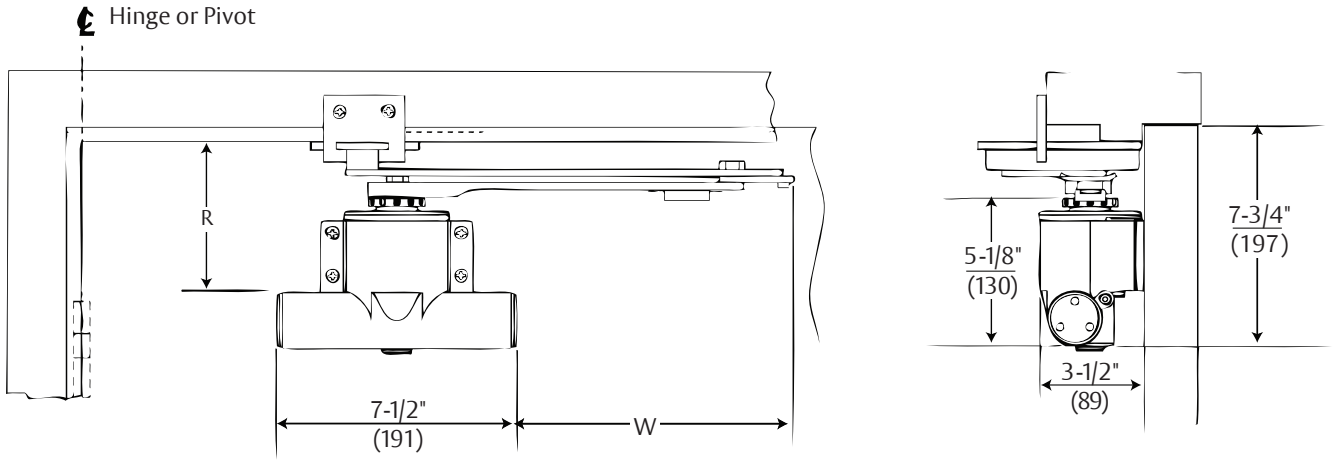

Body mounting holes are spaced 4-1/8" (105mm) horizontally and 1-3/8" (76mm) vertically.

Door Width Inches (cm)	R - Minimum Top Rail 5/8" (16mm) Frame Stop		W - Arm Extension Beyond Closer
	Without Drop Plate	With 88 Drop Plate	
28-32" (71-81)	5-5/8" (143)	2-3/4" (70)	8-7/8" (225)
33-41" (84-104)			10-3/8" (264)
42-48" (107-122)			11-7/8" (302)

Maximum Door Size Inches (cm)		Model Number		
Interior	Exterior	Non-Hold Open	Hold Open	
28-41" (71-104)	28-36" (71-91)	UNI78-B/D	UNI78-B/D-H	x Specify Door Width
42-48" (107-122)	37-48" (94-122)	UNI78-E/F	UNI78-E/F-H	

REGULAR ARM

Brackets for Non-Hold Open Arms

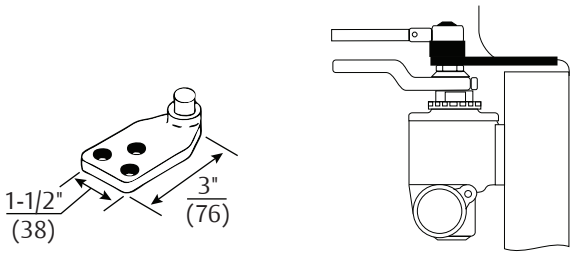

Molded/Bull Nose Trim - 2403B Bracket:
For use where the door frame has molded or bull nose trim which will not accept a standard non-hold open shoe. The bracket is mortised into the frame rabbet and projects beyond the face of the frame. It will accommodate a frame rabbet up to 2" (51mm) deep.

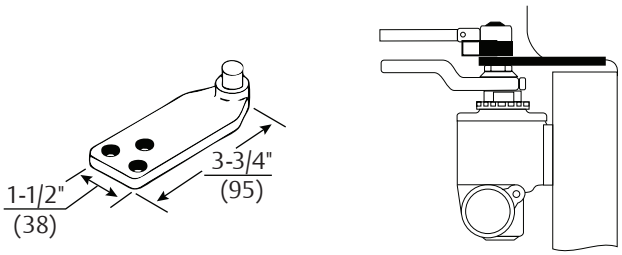

Molded/Bull Nose Trim - 2403 3/4 Bracket:
This bracket is similar to - but longer than – the 2403B bracket. It is designed to accommodate frame rabbets from 2" to 2-7/8" (51 to 73mm) deep.

Brackets for Non-Hold Open Arms

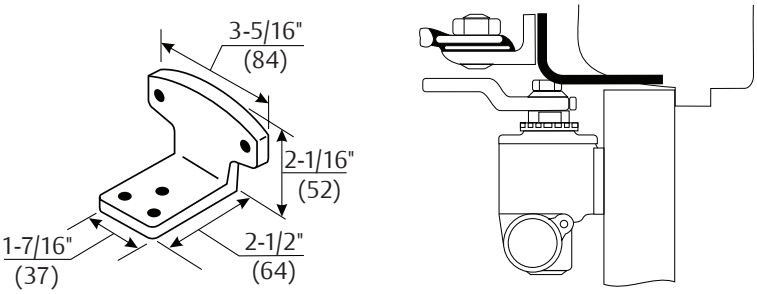

Molded/Bull Nose Trim - 80 Bracket:
For use where the door frame has molded or bull nose trim which will not accept a standard hold open shoe. It is mortised into the frame rabbet, and projects beyond the face of the frame. It will accommdate a rabbet up to 2" (51mm) deep. This bracket is used in combination with the standard hold-open mounting shoe.

78-B/F SERIES
TRADITIONAL DOOR CLOSERS

PARALLEL ARM

Brackets for Non-Hold Open Arms

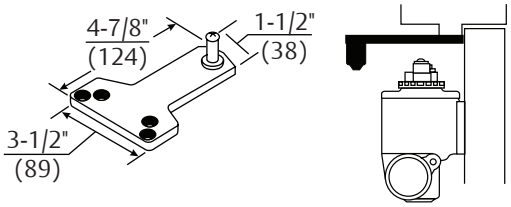

Standard Installation - 1618 Soffit Plate:
This soffit plate is supplied standard with parallel arm closers. It can be mounted where the frame soffit is as narrow as 1" (25mm).

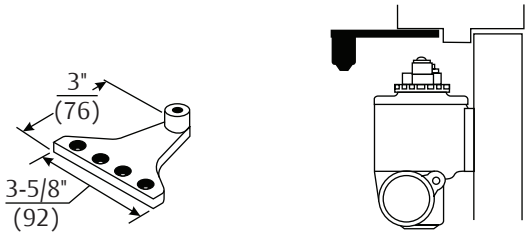

Narrow Frame/Removable Stop - 2018B Soffit Plate:
For use where a narrow frame or frame with removable stop does not permit use of the standard soffit plate. This plate may be mounted on the frame soffit or the frame rabbet where the stop does not exceed 5/8" (16mm) in height. All of the screw holes are in a straight line, requiring as little as 1-1/4" (32mm) of frame reveal to mount bracket and maintain good closer arm geometry. Where the frame soffit is as wide as 2" (51mm), this soffit plate may be used to clear weatherstripping that is up to 1-3/8" (35mm) wide and 5/8" (16mm) in height.

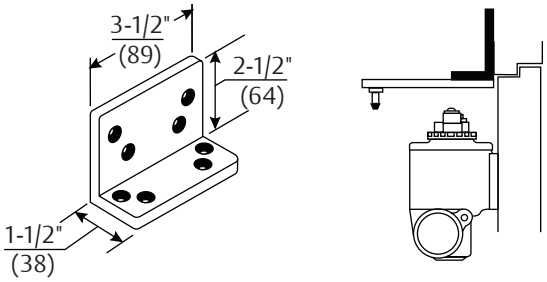

Flush Transom - 2022 Angle Bracket:
For use where rabbeted or flush transom conditions prevent installation of a soffit plate. Used in combination with the 1618 soffit plate, or it may be used in combination with the 2018S soffit plate when it is necessary for the closer arm to clear a separate overhead door holder.

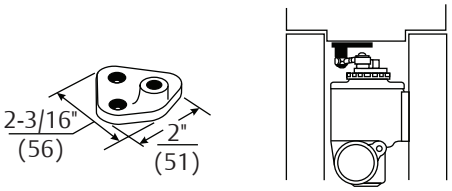

Mounting Between Doors - 2018 Soffit Bracket:
For use where insufficient space between companion doors does not permit use of other soffit plates. This bracket permits mounting of the closer between doors with as little as 4-1/8" (105mm) of header space. Permits closer arm to clear up to a 5/8" (16mm) high stop.

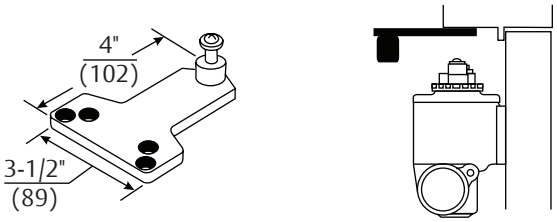

Blade/Applied Stop - 2018D Soffit Plate:
For use where a blade or applied stop does not permit installation of the standard soffit plate. Mounts to either the frame soffit or rabbet. Since this soffit plate projects 7/8" (22mm) less than a standard soffit plate, it requires a minimum frame reveal of 1-1/2" (38mm). Permits closer arm to clear up to a 5/8" (16mm) high stop.

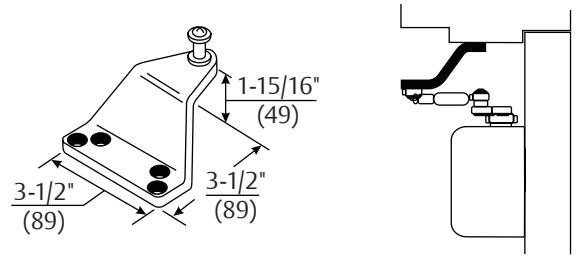

Extra-Clearance - 2018S Offset Soffit Plate:
For use where the need for additional clearance prevents use of the standard soffit plate. This plate mounts to the frame soffit to provide up to 1-1/2" (38mm) of clearance when a separate overhead door holder is used. Standard mounting requires a 2-5/8" (67mm) wide frame soffit. It may also be used where unusually high frame stops or weatherstripping prevent the use of other soffit plates.

PARALLEL ARM

Closer Mounting Plates

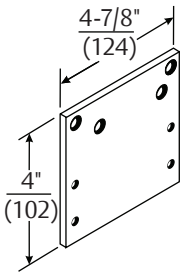

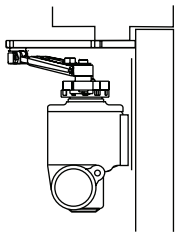

Narrow Top Rail - 88 Drop Plate:
For use where a narrow top rail prevents the closer from being mounted directly to the door surface.

PARALLEL RIGID

Brackets for Non-Hold Open Arms

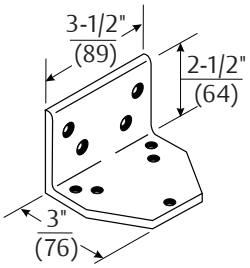

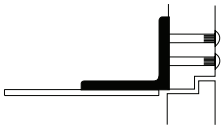

Flush Rabetted Transom - 2019L Angle Bracket:
For use where flush transom conditions prevent mounting of the standard soffit plate. This bracket is used in combination with the standard soffit plate.

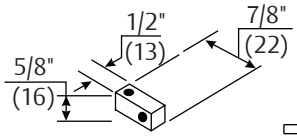

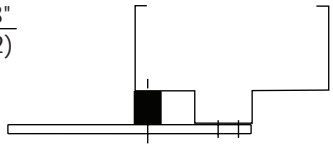

Standard - 2019S Spacer Block:
For use where a narrow frame soffit does not provide adequate support for the soffit plate. Supplied as standard with all parallel rigid arm closers.

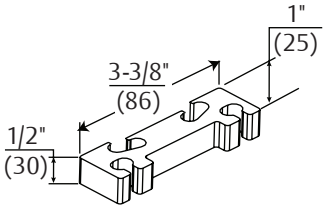

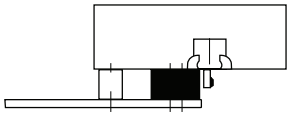

Clearance/Support Blade Stop - 6891 Spacer Block:
For use where the frame has a blade stop and the soffit plate must be mounted on the frame rabbet. This accessory is used in combination with the standard Spacer Block to provide clearance of the blade stop.

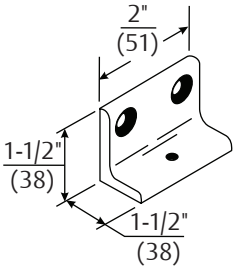

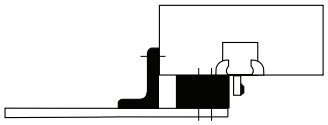

Narrow Frame - 6890 Support Bracket:
For use where the frame is narrow, and the soffit plate cannot be mounted directly to the frame soffit or rabbet. Used in combination with the 6891 Spacer Block on blade stop frames to provide extra support and needed clearance of the blade stop.

78-B/F SERIES
TRADITIONAL DOOR CLOSERS

UNITROL® ARM

Brackets for Non-Hold Open Arms

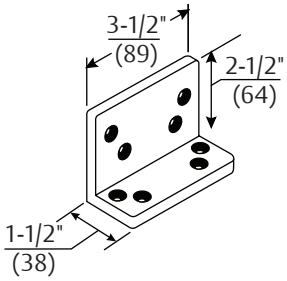

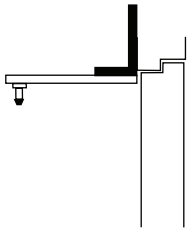

Flush Transom - 2022 Angle Bracket:
For use where rabbeted or flush transom conditions prevent installation of a soffit plate. Used in combination with the 1618 soffit plate, or it may be used in combination with the 2018S soffit plate when it is necessary for the closer arm to clear a separate overhead door holder.

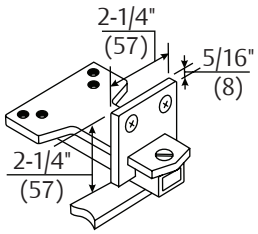

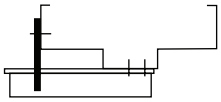

Additional Support - 6190 Reinforcing Bracket:
Standard for use with all parallel arm Unitrol door controls. Provides additional support to the soffit plate on installations with door frame reveals from 1-7/8" to 4-5/8" (48 to 117mm).

Reinforcing Kit

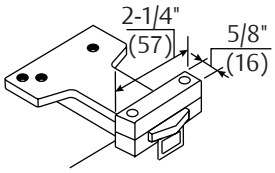

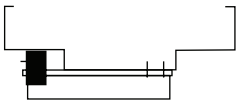

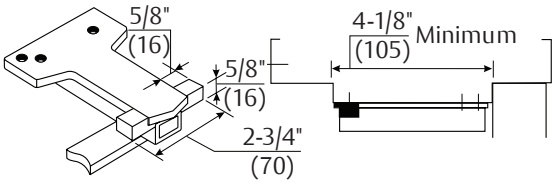

Wide Frame - 6191 Reinforcing Kit:
Optional for use with all parallel arm Unitrol door controls. Used to support the soffit plate on installations with wide frames. Clamps may be used with or without the spacer block, depending on frame conditions.

Closer Mounting Plates

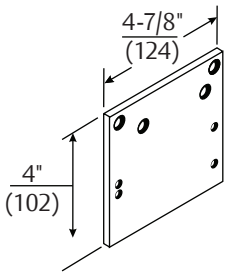

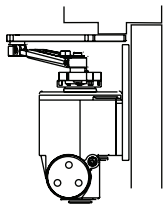

Narrow Top Rail - 88 Drop Plate:
For use where a narrow top rail prevents the closer from being mounted directly to the door surface.

CORNER BRACKETS

All of the following frame-mounted brackets require the use of a regular arm door closer of the opposite hand from the hand of the door. Use the Parallel Arm Sizing Chart to select the correct size of closer to use when the closer is to be mounted on a corner bracket.

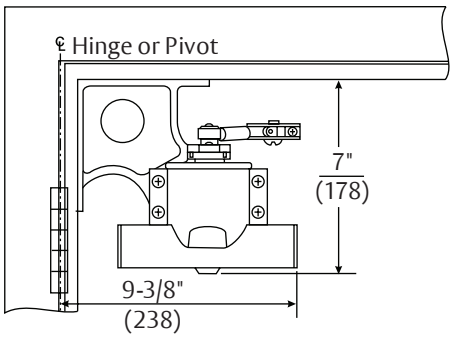

Corner Mounting, Standard Drop - 2-B/F Corner Bracket:
For use where door is required to open to 180°. Minimum soffit width 1-3/8" (35mm).

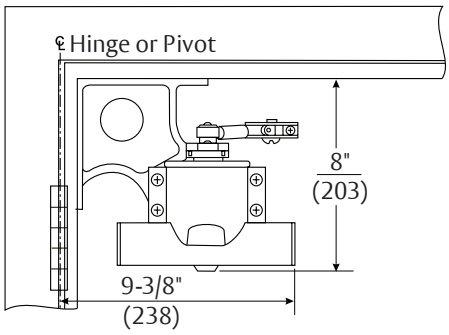

Corner Mounting, Extra Drop - 5-B/F Corner Bracket:
For use with a separate overhead door holder. Drops closer 1" (25mm) lower than 2-B/F Standard Drop Corner Bracket to permit mounting of an overhead holder. Permits door openings to 180° Minimum soffit width 1-3/8" (35mm).

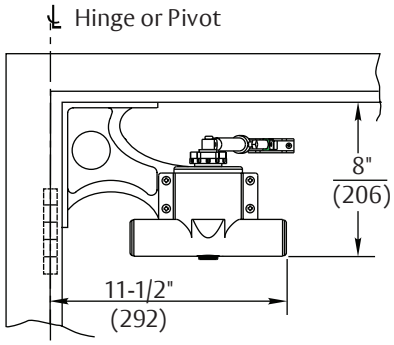

Corner Mounting, Extra Drop and Extension- 8-B/F Combination Bracket:
Recommended for use instead of 2-B/F or 5-B/F Corner Brackets, whenever possible. Provides 1/2" (13mm) more clearance than 5-B/F Corner Bracket for an overhead door holder, and positions closer farther from hinge edge of door for best power advantage. Permits door openings to 140°.

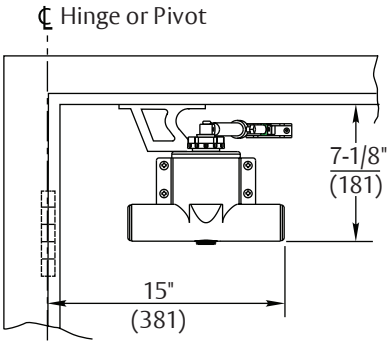

Soffit Mounting - 1-B/F Soffit Bracket:
For use where frame conditions prevent mounting of a corner bracket. This bracket mounts to the overhead frame soffit. Permits door openings to 180°.

NORTON RIXSON

ASSA ABLOY

78-B/F SERIES
TRADITIONAL DOOR CLOSERS

CORNER BRACKETS

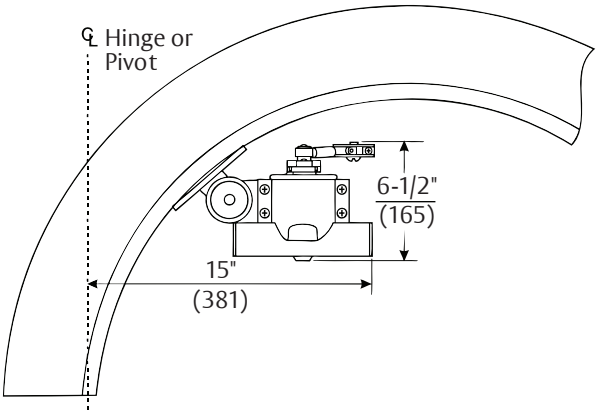

Arched or Circular Top Door - 6-B/F Adjustable Bracket:
For opposite hinge side application on arched or circular top doors. This frame-mounted bracket can be adjusted to accommodate virtually any radius of frame. Minimum soffit width 2-1/2" (64mm). This bracket requires the use of a regular arm door closer of the opposite hand from that of the door. Intended for 90° door swing.

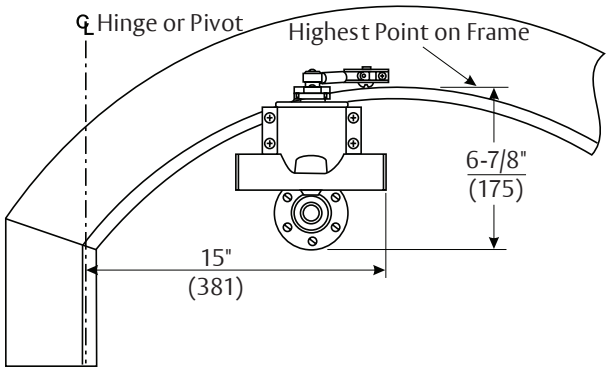

Arched or Circular Top Door - 7-B/F Offset Adjustable Bracket:
For hinge side application on arched or circular top doors. This door-mounted bracket is adjustable to accommodate virtually any radius of frame. Base diameter 3-5/8" (92mm). Use in conjunction with a regular arm door closer. Intended for 90° door swing.

ADAPTER PLATES

Size Closer Being Replaced	Adapter Plate Catalog Number	Dimensions	
		A	B
B	9-B	4-7/8" (124)	2-1/4" (57)
B/C	9-B/C	5-1/2" (140)	2-5/8" (67)
D	None Required	—	—
E/F	9-E/F	5-1/2" (140)	2-5/8" (67)

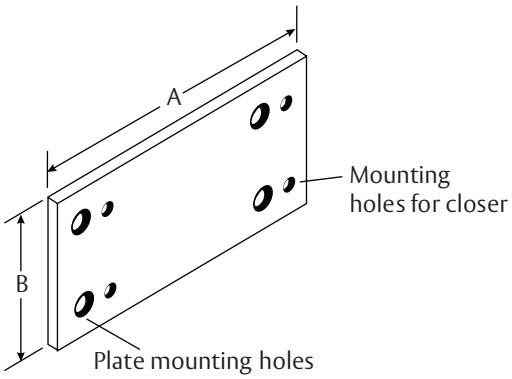

9 Adapter Plate
For use when replacing a discontinued old style traditional surface closer with a series 78-B/F Traditional Surface Closer. The plate selected will employ the existing holes in either door, corner bracket or soffit bracket. The Series 78-B/F will mount to the plate. These plates can be used to convert regular arm, parallel arm or bracket mount installations. Order by model number.

REGULAR ARM

Non-Hold Open

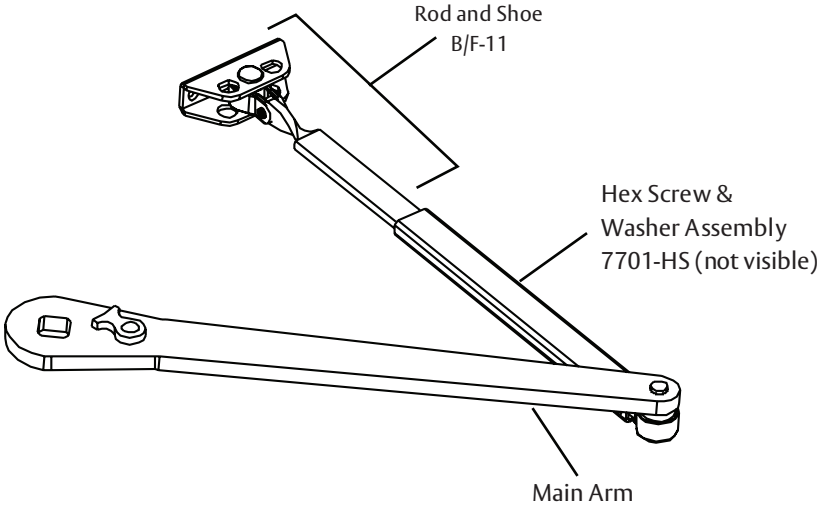

Note: Mounting hardware included with all parts ordered

Arm Function	Complete Arm Assembly	Main Arm	Main Arm Less Rod & Shoe
Non-Hold Open	B/F-1	B/F-1M	B/F-1W

78-B/F SERIES
TRADITIONAL DOOR CLOSERS

PARALLEL ARM

Non-Hold Open

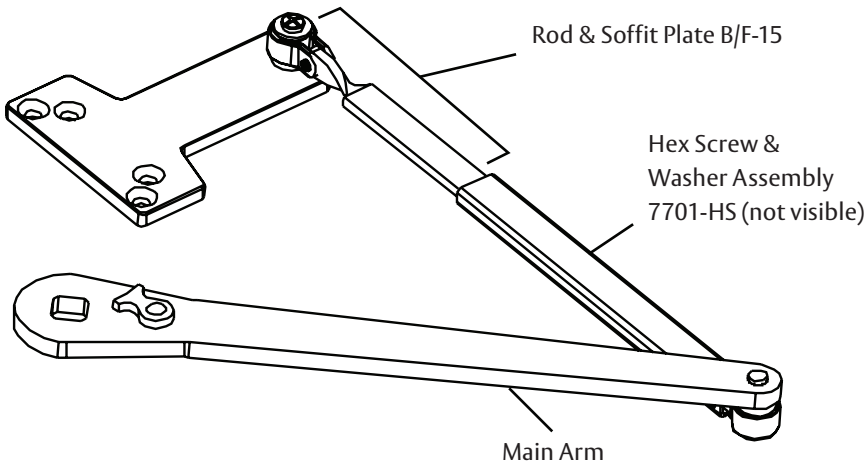

Note: Mounting hardware included with all parts ordered

Arm Function	Complete Arm Assembly	Main Arm	Main Arm Less Rod & Shoe
Non-Hold Open	B/F-5	B/F-1M	B/F-5W

PARALLEL ARM

Non-Hold Open

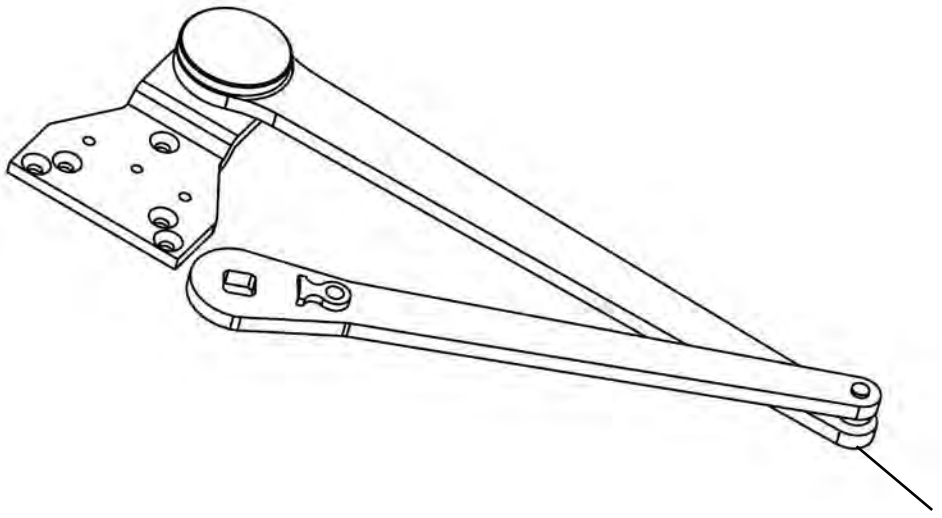

Hold Open

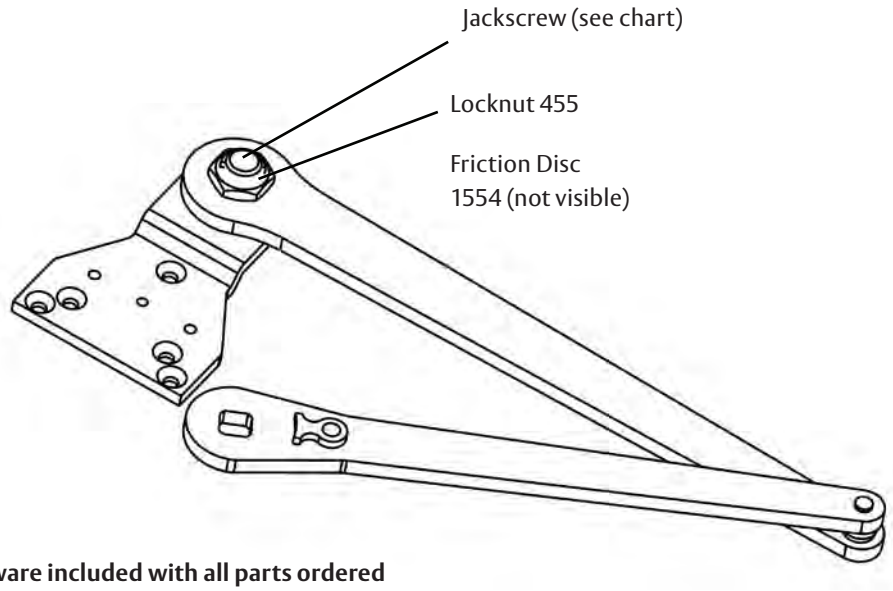

Note: Mounting hardware included with all parts ordered

Arm Function	Complete Arm Assembly	Jackscrew
Non-Hold Open	78PRA-5	N/A
Hold Open	78PRA-8R (Right Hand)	1543R
	78PRA-8L (Left Hand)	1543L

NORTON RIXSON

ASSA ABLOY

78-B/F SERIES
TRADITIONAL DOOR CLOSERS

UNITROL® ARM ASSEMBLIES

Non-Hold Open

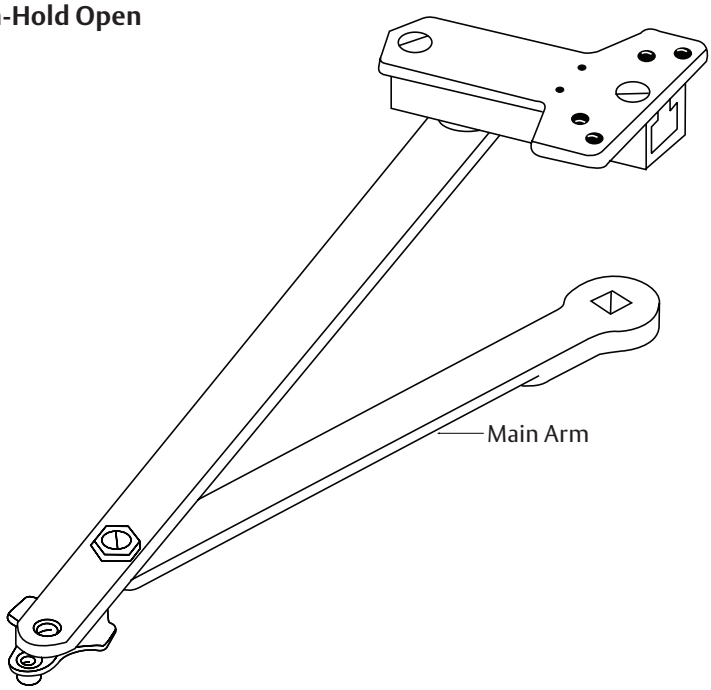

Hold Open

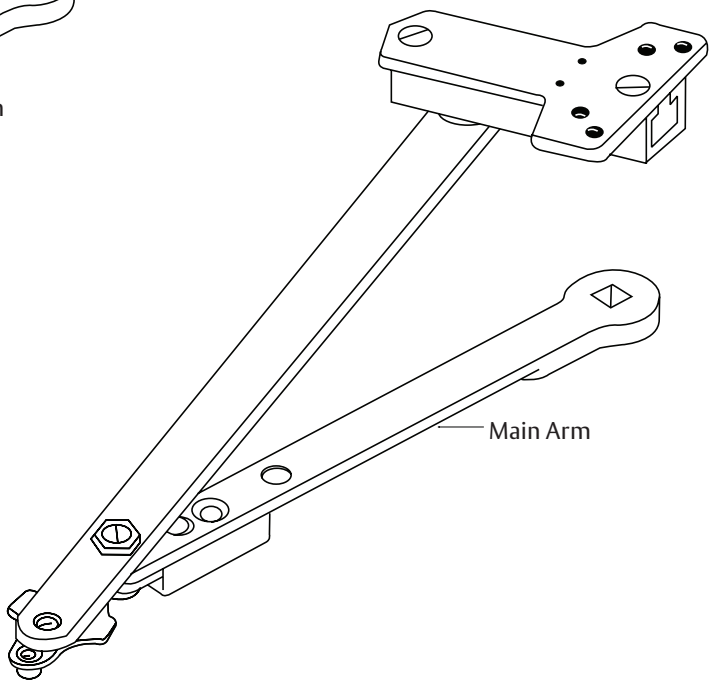

Note: Mounting hardware included with all parts ordered

Door Width (cm)	Main Arm Length (mm)	Complete Arm Assembly	
		Non-Hold Open	Hold Open
28"- 32" (71 - 81)	9-1/2" (241)	6130-17	6130-7
33"- 41" (84 - 104)	11" (279)	6130-18	6130-8
42"- 48" (107 - 122)	12-1/2" (318)	6130-19	6130-9

Only available in painted finishes.

FASTENERS

Standard Fasteners	With Arms Specified Below		
	Regular Parallel	Parallel Rigid (PR)	Unitrol (UNI)
Door			
Self Drilling Self Tapping	S	S	S
Machine Screw	S	S	S
Sleeve Nut/Sex Nut		S	S
Frame			
Self Drilling Self Tapping	S	S	S
Machine Screw	S	S	S

S = Standard
Fasteners are standard (included) with closer package.
Examples:
78B/D RA includes self drilling, self tapping and machine screws
78B/D PRA includes self drilling, self tapping, machine screws and sleeve nut/sex nuts

Optional Fasteners	Description	With Arms Specified Below		
		Regular Parallel	Parallel Rigid (PR)	Unitrol (UNI)
Door				
SN^	Sleeve Nut/Sex Nut	O		
TBGN^	Thru Bolts & Grommet Nuts	O	O	O

O = Optional
^ When SN or TBGN are ordered, standard screw packs are also furnished.
Examples:
78B/D RA x **SN** includes self drilling, self tapping, machine screws and sleeve/sex nuts

SN are for use on hollow metal doors and can also be used for thru bolting on wood doors. When selected, SNs are supplied for 1-3/4" (44mm) thick doors unless specified for 2-1/4" (57mm) thick doors

TBGN are an alternative to SN for wood doors. When selected an add-on option, TBGNs are supplied standard for 1-3/4" (44mm) thick doors. They can be specified for 1-3/8" (35mm) thick doors.

NORTON RIXSON

ASSA ABLOY

78-B/F SERIES
TRADITIONAL DOOR CLOSERS

FINISHES

Description	Specify (BHMA) Designation	Complements the following finishes
Aluminum	689	628, 625, 629, 630, 651, 652
Statuary Bronze	690	640, 613
Dull Bronze	691	612, 637, 639
Black	693	315
Medium Amber	694	313
Gold	696	605, 606, 632, 633
Prime Coat	600*	—
Dark Oxidized Satin Bronze Equivalent	613E	—
Black Suede Powder	BSP	—
White Suede Powder	WSP	—

All door closers are painted in water borne acrylics. All steel parts, arms, bracket and mounting plates are powder coated. The closers will withstand 100 hours of salt spray. ANSI requires 25 hours.

*600 is a special rust-inhibiting prime coat. Closers can be ordered prime coat only (specify closer x 600). An additional charge applies if finish coat is required over prime coat (ex: 78-B/D x 600 x 689).

MISCELLANEOUS PARTS

Springs	
Part Number	**Description**
24BD	B/D Spring
56EF	E/F Spring

Wrenches	
Part Number	**Description**
78-SW	Spanner Wrench

NORTON RIXSON

ASSA ABLOY

HOW TO ORDER

UNI	78	B/D	H	RH	689
Prefix	**First & Second Digit** Defines Closer Series	Specifies Closer Size	**Suffixes**	**Hand**	**Finish** (See Page 207)

UNI – Unitrol® Arm (specify door width)

Multi-Size
B/D – Spring Size 2 thru 4
E/F – Spring Sizes 5 & 6

RA – Regular Arm, non-hold open
PA – Parallel Arm, non-hold open
PRA – Parallel Rigid Arm, non-hold open
PRHA – Parallel Rigid Arm, hold open
H – Hold Open – Unitrol arm only
DA – Delayed Action

NOTES:

- Before installing a door closer, verify the accessibility, fire, and life-safety requirements that are in effect. This includes the mounting height and projection into the clear opening. Check the adopted state and local building codes and consult the Authority Having Jurisdiction (AHJ)
- To maintain the warranty and ensure proper operation of the product, follow the installation instructions & templates and install on the inside of the building.
- Consult NFPA 80 for the hinge requirements on a fire door.
- Failure to use fasteners supplied with closer may void factory warranty.
- Optional fasteners are available for a variety of applications. Consult the door and frame manufacturer to ensure the proper fasteners are used to maintain certifications.
- Sizing charts are based on 1-3/4" x 7' standard weight doors swinging to 110°. Other application conditions (e.g. larger door heights or weight) may require larger size closer. Adjusting the spring power to meet the low opening force requirements of the Americans With Disabilities Act or ANSI/BHMA Standard A117.1, may not provide adequate closing power to dependably close and latch the door in some conditions (i.e. air movement from wind gusts or building stack pressure).

NORTON RIXSON

ASSA ABLOY

1700 SERIES
LIGHT COMMERCIAL DOOR CLOSER

INTRODUCTION

1700 Series Door Closers offer a compact design that is ideal for interior door applications. This narrow-style closer has distinctive lines that harmonize with most decors. The 1700 Series offers an economical alternative for those installations where a more heavy-duty closer is not necessary.



STANDARD FEATURES

- Tri-Style® packaging: closer tri-packed for regular arm, top jamb or parallel arm installation
- Non-handed
- Size 3 or 4 depending on installation
- Aluminum alloy shell
- Rack & pinion operation
- Adjustable closing speed
- Adjustable latch speed
- Adjustable backcheck cushioning: independent regulating valve
- Non-hold open
- Slim line cover
- Auxiliary stop required (by others)
- Interior doors

OPTIONAL FEATURES

- Hold open

CERTIFICATIONS

- ANSI/BHMA A156.4 Grade 3 certified
- UL / cUL listed for use on fire rated doors
- UL10C listed for positive pressure fire test

EXPLANATION OF FEATURES

Door Plates

For narrow top rails, narrow frame faces, and top jamb hold open installations. Specify finish when ordering separately.

Molded Slim Line Cover

Molded of high-impact U.L. Listed material, cover encloses closer body and mounting screws.

SPECIFICATIONS

Closers for interior doors shall be full rack-and-pinion type with cast aluminum alloy shell. Closer shall be non-handed to permit installation on either hand of door. Closer to be supplied with brackets to allow regular arm, parallel arm or top jamb mounting. Closer to have noncritical valves to independently regulate sweep speed (and) latch speed (and backcheck cushioning.) (Closer shall be enclosed in a molded slim line cover.) Closer to be Norton Rixson 1700 Series.

NORTON RIXSON

ASSA ABLOY

1700 SERIES
LIGHT COMMERCIAL DOOR CLOSER

REGULAR ARM INSTALLATION

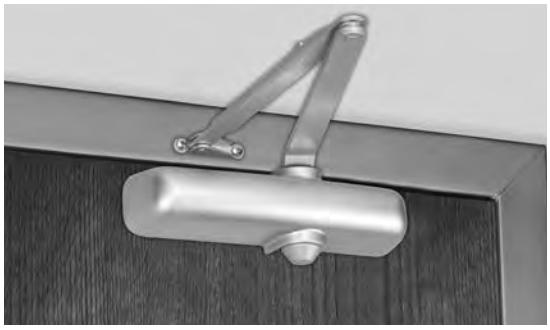

Closer mounts on door;
Arm bracket on frame face.

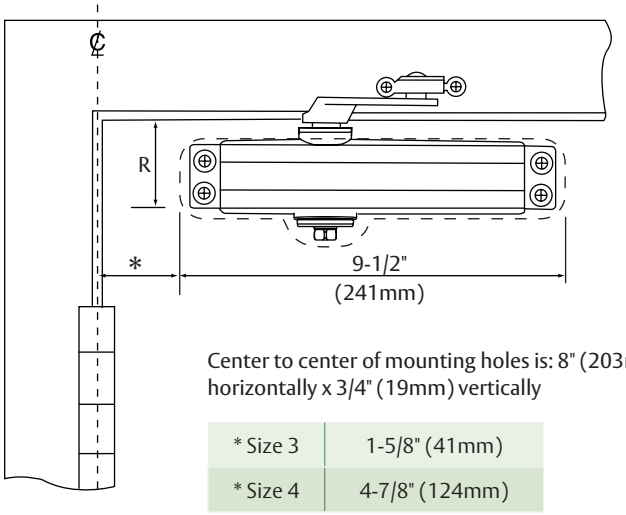

Center to center of mounting holes is: 8" (203mm) horizontally x 3/4" (19mm) vertically

* Size 3	1-5/8" (41mm)
* Size 4	4-7/8" (124mm)

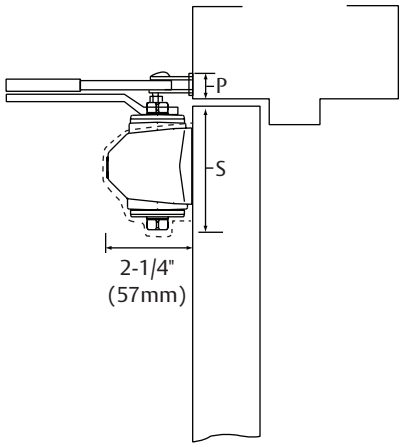

R Minimum Top Rail				S Minimum Top Rail Clearance		P Minimum Ceiling Clearance Without Drop Plate	
Without Drop Plate		With N1756 Drop Plate					
Non-Hold Open	Hold Open	Non-Hold Open	Hold Open	Non-Hold Open	Hold Open	Non-Hold Open	Hold Open
2" (51mm)		1-1/4" (32mm)		2-3/4" (70mm)		1" (25mm)	1-3/8" (35mm)

Maximum door swing = 180°

NORTON RIXSON

ASSA ABLOY

1700 SERIES
LIGHT COMMERCIAL DOOR CLOSER

TOP JAMB INSTALLATION



Closer mounts on push side of frame; arm shoe mounts to door.

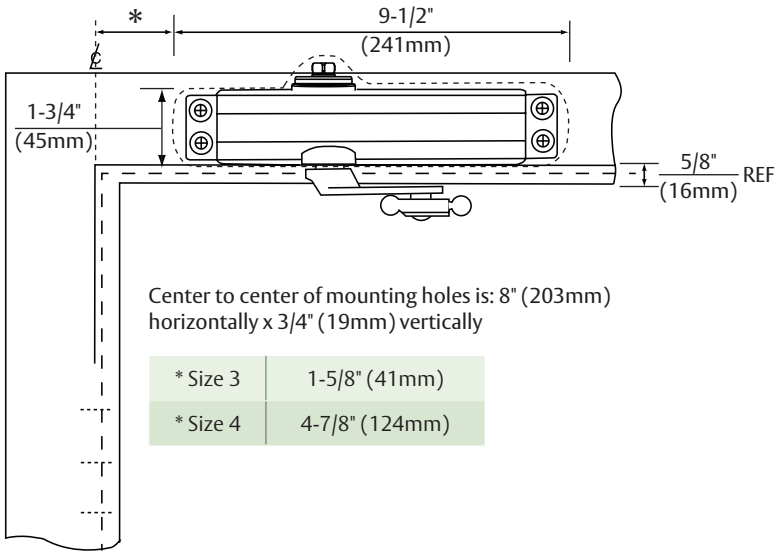

Center to center of mounting holes is: 8" (203mm) horizontally x 3/4" (19mm) vertically

* Size 3	1-5/8" (41mm)
* Size 4	4-7/8" (124mm)

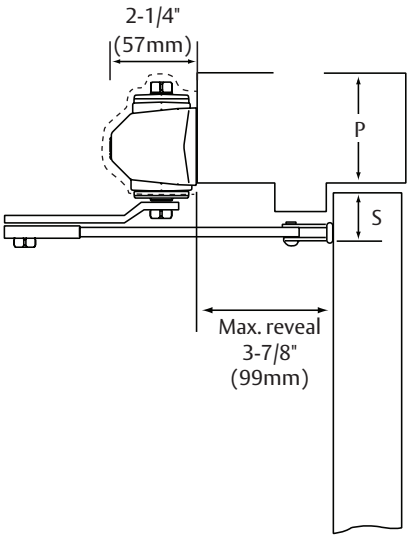

S Minimum Top Rail 5/8" (16mm) Frame Stop			P Minimum Ceiling Clearance			
Without Drop Plate	With N1757 Drop Plate		Without Drop Plate		With N1757 Drop Plate	
Non-Hold Open	Non-Hold Open	Hold Open	Non-Hold Open	Hold Open	Non-Hold Open	Hold Open
1-5/16" (33mm)	2-1/4" (57mm)	2-5/8" (67mm)	2-1/2" (64mm)	Required*	1-3/4" (44mm)	

***Hold open (top jamb) application requires use of N1757 drop plate**
Maximum door swing
Size 3 : 180°; reveals 0" to 3"
: 160°; reveals 3" to 3-7/8"
Size 4 : 140°; reveals 0" to 3-7/8"

Experience a safer and more open world

NORTON RIXSON

ASSA ABLOY

1700 SERIES
LIGHT COMMERCIAL DOOR CLOSER

PARALLEL ARM INSTALLATION



Closer Mounts on Door;
Bracket on frame soffit.

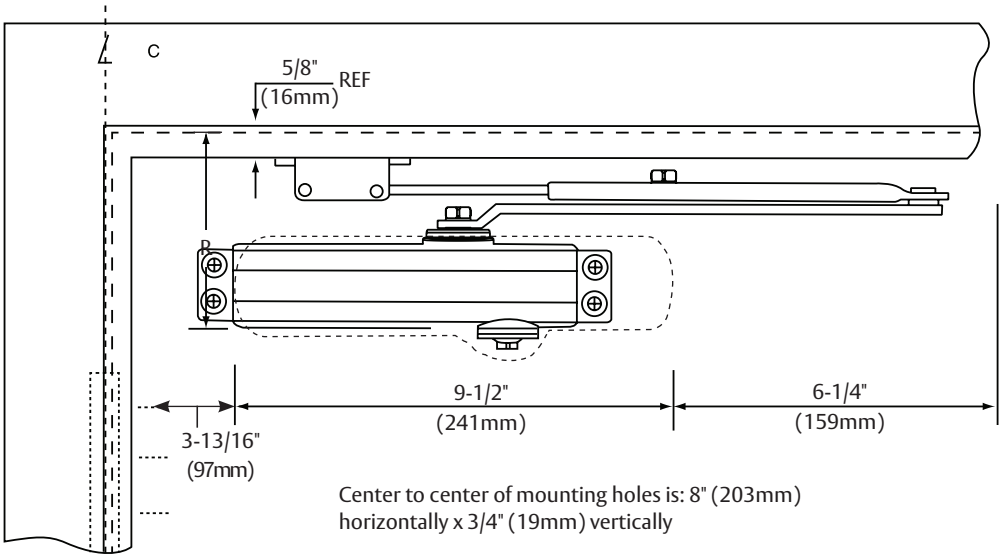

Center to center of mounting holes is: 8" (203mm)
horizontally x 3/4" (19mm) vertically

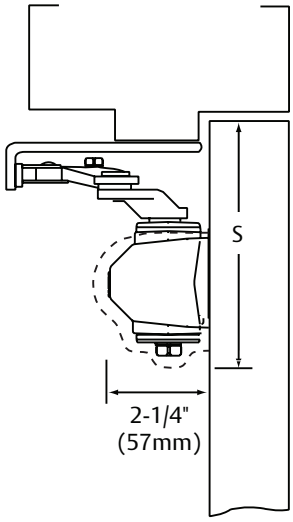

R Minimum Top Rail 5/8" (16mm) Frame Stop				S Minimum Top Rail Clearance	
Without Drop Plate		With N1758 Drop Plate			
Non-Hold Open	Hold Open	Non-Hold Open	Hold Open	Non-Hold Open	Hold Open
4-1/2" (114mm)		2-7/8" (73mm)		5" (127mm)	

Maximum door swing = 180°

ACCESSORIES

Part Number	Description
N1756	Drop Plate (Regular Arm)
N1757	Drop Plate (Top Jamb)
N1758	Drop Plate (Parallel Arm)

1700 SERIES
LIGHT COMMERCIAL DOOR CLOSER

HOW TO ORDER

1700
Defines Closer Series

H
Suffix

Blank - Non-Hold Open
H - Hold Open

689
Finish

Description	Specify (BHMA) Designation	Complements the following finishes
Aluminum	689	628, 625, 629, 630, 651, 652
Statuary Bronze	690	640, 613

NOTES:

- Before installing a door closer, verify the accessibility, fire, and life-safety requirements that are in effect. This includes the mounting height and projection into the clear opening. Check the adopted state and local building codes and consult the Authority Having Jurisdiction (AHJ)
- To maintain the warranty and ensure proper operation of the product, follow the installation instructions & templates and install on the inside of the building.
- Consult NFPA 80 for the hinge requirements on a fire door.
- Failure to use fasteners supplied with closer may void factory warranty.
- Optional fasteners are available for a variety of applications. Consult the door and frame manufacturer to ensure the proper fasteners are used to maintain certifications.
- Sizing charts are based on 1-3/4" x 7' standard weight doors swinging to 110°. Other application conditions (e.g. larger door heights or weight) may require larger size closer. Adjusting the spring power to meet the low opening force requirements of the Americans With Disabilities Act or ANSI/BHMA Standard A117.1, may not provide adequate closing power to dependably close and latch the door in some conditions (i.e. air movement from wind gusts or building stack pressure).

NORTON RIXSON

ASSA ABLOY

210 SERIES
DOOR CLOSER



INTRODUCTION

The 210 Series is an adjustable door closer for light traffic commercial openings, including office and utility closet doors. It features an adjustable spring; tri-packed, non-hold open arms; and both independent and separate latch, sweep and backcheck intensity valves. The 210 is ideal for stocking distributors serving high-volume after-market segments.

FEATURES

- Adjustable spring size 1 through 6
- Non-handed
- Cast aluminum body
- Rack-and-pinion design
- Independent latch sweep and backcheck intensity valves
- Full plastic cover
- Non-hold open, hold open and heavy-duty arms
- Closer footprint: 3/4" x 12"
- Cover dimensions: 2-15/16" high x 2-1/8" deep x 13-1/16" long
- Available in 689 (aluminum) or 690 (dark bronze) finishes
- Sex nuts (SN-134) included
- 10 year limited warranty

CERTIFICATIONS

- ANSI/BHMA A156.4, Grade 1 BHMA CERTIFIED
- UL / cUL listed for use on fire rated doors
- UL10C listed for positive pressure fire test
- Meets requirements for Americans with Disabilities Act (ADA) and ANSI/BHMA A117.1

CAUTION: Door Closers for Low Opening Force Applications:
Door closers installed in openings required to meet the requirements of the Americans With Disabilities Act or ANSI/BHMA Standard A117.1, when adjusted to meet those requirements, may not provide adequate closing power to dependably close and latch the door based on opening or site conditions.

NORTON RIXSON

ASSA ABLOY

210 SERIES
DOOR CLOSER

APPLICATIONS

Standard Arms



TPN arm shown (regular mounting)

- Pull-side application
- Closer mounted on the door



TPN arm shown (top jamb mounting)

- Push-side application
- Closer mounted on the frame
- Minimum top rail = 2-1/4" (57mm)
- Maximum frame reveal = 2-3/4" (70mm)

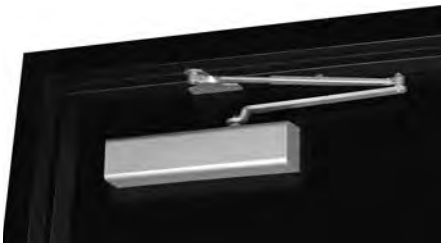

TPN arm shown (parallel mounting)

- Push-side application
- Closer mounted on the door

Heavy Duty Arms



HDH arm (with stop) shown

- Push-side application
- Stop is removable

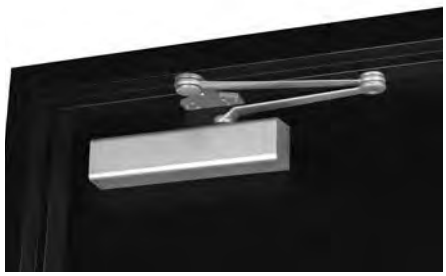

HDN arm (without stop) shown

- Push-side application
- Stop is removable

NOTE: Arms are not interchangeable with Norton Rixson premium door closers.

ACCESSORIES

Part Number	Description
210P	Full Plastic Cover
SP210	Screw pack for TPN arm

HOW TO ORDER

210
Defines Closer Series

Includes Full Cover

X

TPN
Arm Assemblies

- **TPN** – Tri-Packed (Regular, Parallel, Top Jamb Mounting), Non-Hold Open
- **TPH** – Tri-Packed (Regular, Parallel, Top Jamb Mounting), Hold Open
- **HDN** – Heavy Duty, Non-Hold Open with Removable Stop
- **HDH** – Heavy Duty, Hold Open Thumbturn with Removable Stop

X

689
Finish

- **689** – Aluminum
- **690** – Dark Bronze

NOTES:

- Before installing a door closer, verify the accessibility, fire, and life-safety requirements that are in effect. This includes the mounting height and projection into the clear opening. Check the adopted state and local building codes and consult the Authority Having Jurisdiction (AHJ)
- To maintain the warranty and ensure proper operation of the product, follow the installation instructions & templates and install on the inside of the building.
- Consult NFPA 80 for the hinge requirements on a fire door.
- Failure to use fasteners supplied with closer may void factory warranty.
- Optional fasteners are available for a variety of applications. Consult the door and frame manufacturer to ensure the proper fasteners are used to maintain certifications.
- Sizing charts are based on 1-3/4" x 7' standard weight doors swinging to 110°. Other application conditions (e.g. larger door heights or weight) may require larger size closer. Adjusting the spring power to meet the low opening force requirements of the Americans With Disabilities Act or ANSI/BHMA Standard A117.1, may not provide adequate closing power to dependably close and latch the door in some conditions (i.e. air movement from wind gusts or building stack pressure).

NORTON RIXSON

ASSA ABLOY

160 SERIES
DOOR CLOSER

INTRODUCTION

The 160 Series door closer, is ideal for stocking distributors serving high volume after-market and storefront segments. The 160 Series features an adjustable spring, non-hold open arms and independent and separate latch, sweep and backcheck intensity valves. With easy installation and maintenance and dependable control, the 160 Series is perfect for office doors, utility doors and strip mall applications.



FEATURES

- Two models:
  - 161BF: adjustable spring size 1 through 4
  - 164: size 4 spring
- Non-handed
- Cast aluminum body
- Rack-and-pinion design
- Independent latch sweep and backcheck intensity valves
- Non-hold open arms: 161BF, 164
- Hold open arms: 161BF only
- Closer footprint: 3/4" x 9-1/16"
- Closer projection: 2-5/8"
- Available in 689 (aluminum) or 690 (dark bronze) finishes
- 5-year limited warranty

CERTIFICATIONS

- ANSI/BHMA A156.4, Grade 1
- UL / cUL listed for use on fire rated doors
- UL10C listed for positive pressure fire test
- Meets requirements for for Americans with Disabilities Act (ADA) and ANSI/BHMA A117.1

CAUTION: Door Closers for Low Opening Force Applications:
Door closers installed in openings required to meet the requirements of the Americans With Disabilities Act or ANSI/BHMA Standard A117.1, when adjusted to meet those requirements, may not provide adequate closing power to dependably close and latch the door based on opening or site conditions.

NORTON RIXSON

ASSA ABLOY

160 SERIES
DOOR CLOSER

APPLICATIONS



TPN arm shown (regular mounting)

- Pull-side application
- Closer mounted on the door



TPN arm shown (top jamb mounting)

- Push-side application
- Closer mounted on the frame
- Minimum top rail = 2-1/4" (57mm)
- Maximum frame reveal = 2-3/4" (70mm)

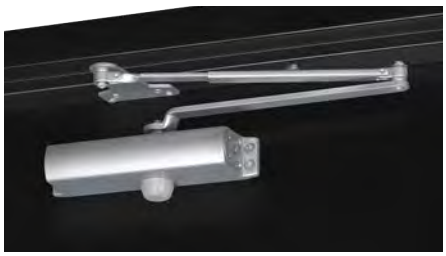

TPN arm shown (parallel mounting)

- Push-side application
- Closer mounted on the door

NOTE: Arms are not interchangeable with Norton Rixson premium door closers.

COVER



To order cover only, specify 160P x finish. (Only available with model 161BF closer.)

Experience a safer
and more open world

NORTON RIXSON

ASSA ABLOY

160 SERIES
DOOR CLOSER

HOW TO ORDER

16 — First Two Digits — Defines Closer Series

x

1BF — Defines Closer Size

- **1BF** – Adjustable 1-4
- **4** – Size 4

x

TPN — Arm Assemblies

- **TPN** – Tri-Packed (Regular, Parallel, Top Jamb Mounting), Non-Hold Open
- **TPH** – Tri-Packed (Regular, Parallel, Top Jamb Mounting), Hold Open

x

689 — Finish

- **689** – Aluminum
- **690** – Dark Bronze

Model #	Suffix	Non-Hold Open	Hold Open	Adjustable Spring 1-4	Size 4 Spring	Adjustable Slide Arm	Tri-Packed (RA, TJ, PA)	Sex Nuts Included
161BF	TPN	•		•		•	•	•
	TPH		•	•		•	•	•
164	TPN	•			•	•	•	•

Note: Specify 161BFxOP2 to order the 161BF closer packed with a cover.

NOTES:

- Before installing a door closer, verify the accessibility, fire, and life-safety requirements that are in effect. This includes the mounting height and projection into the clear opening. Check the adopted state and local building codes and consult the Authority Having Jurisdiction (AHJ)
- To maintain the warranty and ensure proper operation of the product, follow the installation instructions & templates and install on the inside of the building.
- Consult NFPA 80 for the hinge requirements on a fire door.
- Failure to use fasteners supplied with closer may void factory warranty.
- Optional fasteners are available for a variety of applications. Consult the door and frame manufacturer to ensure the proper fasteners are used to maintain certifications.
- Sizing charts are based on 1-3/4" x 7' standard weight doors swinging to 110°. Other application conditions (e.g. larger door heights or weight) may require larger size closer. Adjusting the spring power to meet the low opening force requirements of the Americans With Disabilities Act or ANSI/BHMA Standard A117.1, may not provide adequate closing power to dependably close and latch the door in some conditions (i.e. air movement from wind gusts or building stack pressure).

NORTON RIXSON

ASSA ABLOY

9500 SERIES
CAST IRON DOOR CLOSER

INTRODUCTION

Ideal for high use openings, the 9500 Series Cast Iron door closer offers the durability, flexibility and strength required to meet the needs of your facility. For interior or exterior doors, this ANSI/BHMA Grade 1 closer features a clean, modern cover aesthetic and durable cast iron body that can be used in a variety of institutional environments requiring ADA compliance.



FEATURES

- Cast iron closer body
- Non-handed
- Rack-and-pinion design
- Standard, separate and independent, latch, sweep and backcheck intensity valves
- Pressure relief valves for both opening and closing cycles protect the door and frame from damage and reduces maintenance costs
- Staked valves
- 2-1/4" (57mm) projection
- 1-1/2" (38mm) diameter piston
- 5/8" (16mm) diameter pinion journals
- Closer mounting plate for easy installation
- Tri-style® packaging: packed for regular, top jamb or parallel arm mounting
- Adjustable spring sizes 1-6
- Molded ABS plastic cover
- All standard arm applications allow doors to swing 180°, conditions permitting
- Heavy-duty arms: Regular Rigid, Parallel Rigid, CloserPlus®, Parallel Rigid Offset and Unitrol®
- Slide Tracks: push or pull side mounting
- 30-year limited warranty
- Exceeds 25 million cycles

OPTIONAL FEATURES

- Metal cover
- Delayed action

9500 SERIES
CAST IRON DOOR CLOSER

OVERVIEW

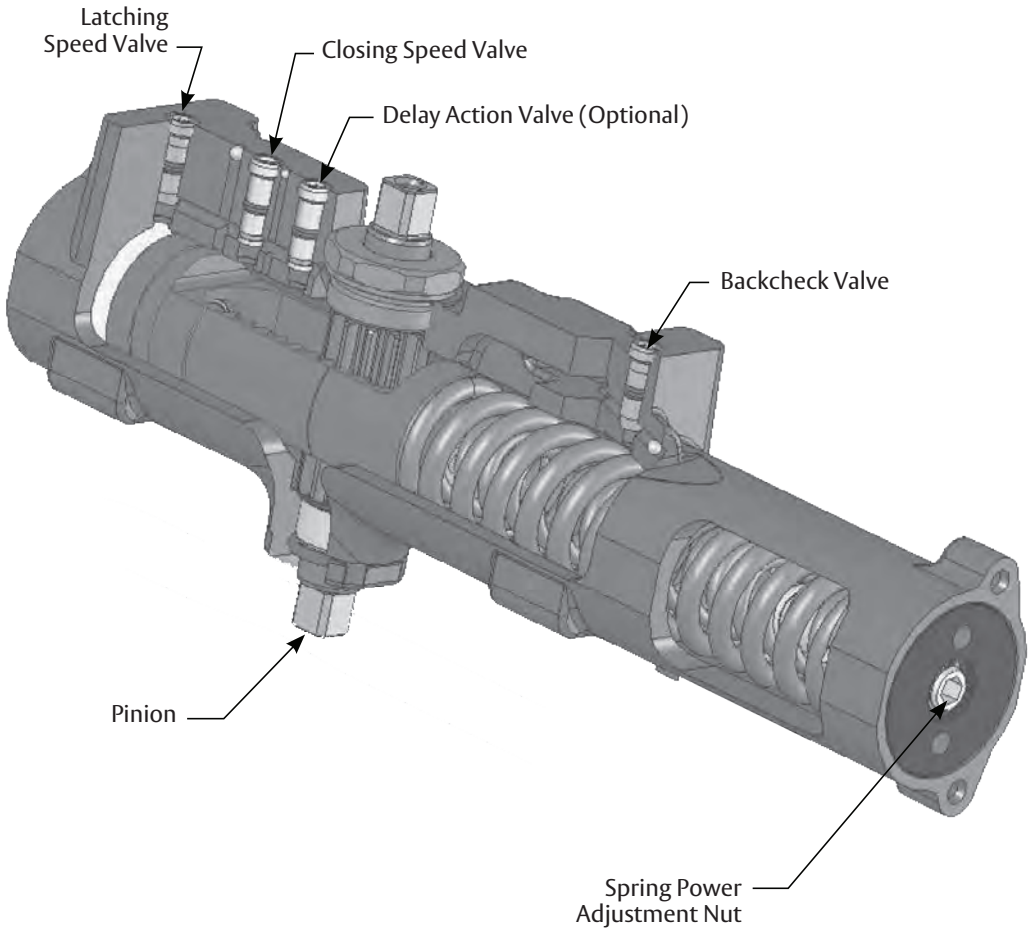

CERTIFICATIONS

- ANSI/BHMA A156.4, Grade 1 certified
- UL / cUL listed for use on fire rated doors
- UL10C listed for positive pressure fire test
- Comply with requirements for the Americans with Disabilities Act (A.D.A) and ANSI standard A117.1
- This product is manufactured in an ISO 9001, ISO 14001 facility
- UL certified environmental produced declaration
- GreenCircle certified environmental facts

CAUTION: Door Closers for Low Opening Force Applications:
Door closers installed in openings required to meet the requirements of the Americans With Disabilities Act or ANSI/BHMA Standard A117.1, when adjusted to meet those requirements, may not provide adequate closing power to dependably close and latch the door based on opening or site conditions.

NORTON RIXSON

ASSA ABLOY

9500 SERIES
CAST IRON DOOR CLOSER

SPECIFICATIONS

Door closers shall be of full rack and pinion construction with a cold headed heat-treated steel spindle and a forged steel piston precision machined and heat treated. The case shall be of cast iron. All closers for both interior and exterior doors shall be the product of one manufacturer.

Surface closers shall be adjustable to provide sizes 1 though 6 and comply with ADA. All sizes shall be accommodated in one closer body.

Closing shall be controlled by two valves — one to control closing speed and one to control latching speed. Valves shall be concealed against unauthorized adjustment and be non-critical with “O” ring seals. Delayed action shall be available and shall be accomplished with a separate valve.

All arms shall be finely finished with heavy duty forged steel main arm. All closers shall be suitable for regular arm, top jamb, and parallel arm mounting and track type applications when provided with proper brackets and arms. Hold open and heavy duty arms are available. Closers mounted regular arm, top jamb and parallel arm shall allow for full 180° door opening, trim permitting.

Closers shall be available with an adjustable backcheck intensity valve with a safety feature that automatically relieves internal pressure when backcheck has reached the desired adjustment level. V alves shall be accessible without removing the closer from the door.

Closers shall be available with a backcheck intensity valve. Backcheck begins at approximately 70° of door opening for all applications. This valve shall be operative on regular, top jamb, parallel arm, and track type mountings.

Closer covers shall be non-handed to meet a variety of door conditions and design requirements. Closer covers shall be of high impact plastic material of flame retardant grade, secured by machine screws. Projection of the closer body from the door shall not exceed 2-1/4". Closers shall be capable of mounting on 1-3/4" top rail or inverted mounting on 1-3/4" top jamb. Metal covers shall be available. All closers with metal covers shall be available in architectural finishes to match corresponding door hardware.

Closers without hold open shall be regularly furnished with power adjustment arm bracket capable of providing a 15% power adjustment.

A mounting bracket to attach the closer shall be regularly furnished.

Hydraulic fluid shall be of a type requiring no seasonal valve readjustment due to extreme temperature variations.

Closer shall have a 30-year limited warranty.

Closers with non-hold open arms shall be listed by Underwriters Laboratories.

9500 SERIES
CAST IRON DOOR CLOSER

TECHNICAL DETAILS – REGULAR ARM

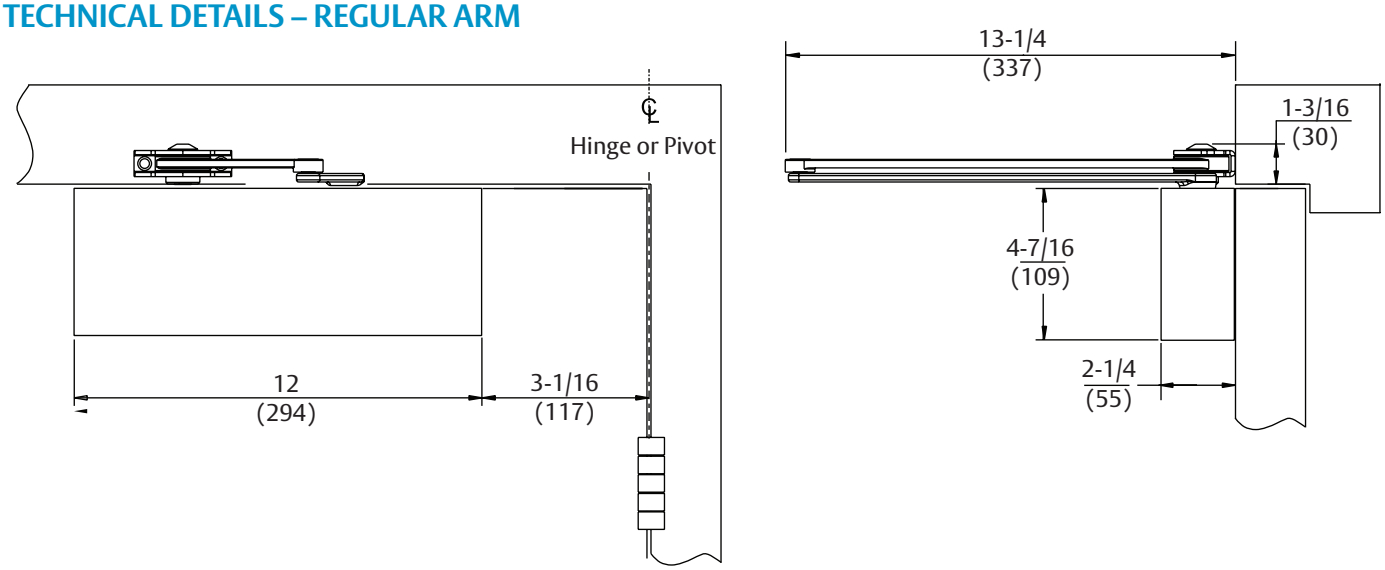

Arm Function	Minimum Header	Minimum Top Rail	Maximum Door Swing
Non-Hold Open	1-1/2" (38)	3" (76)	180° (trim permitting)
Hold Open	1-11/16 (43)		90°-180°

TECHNICAL DETAILS – PARALLEL ARM

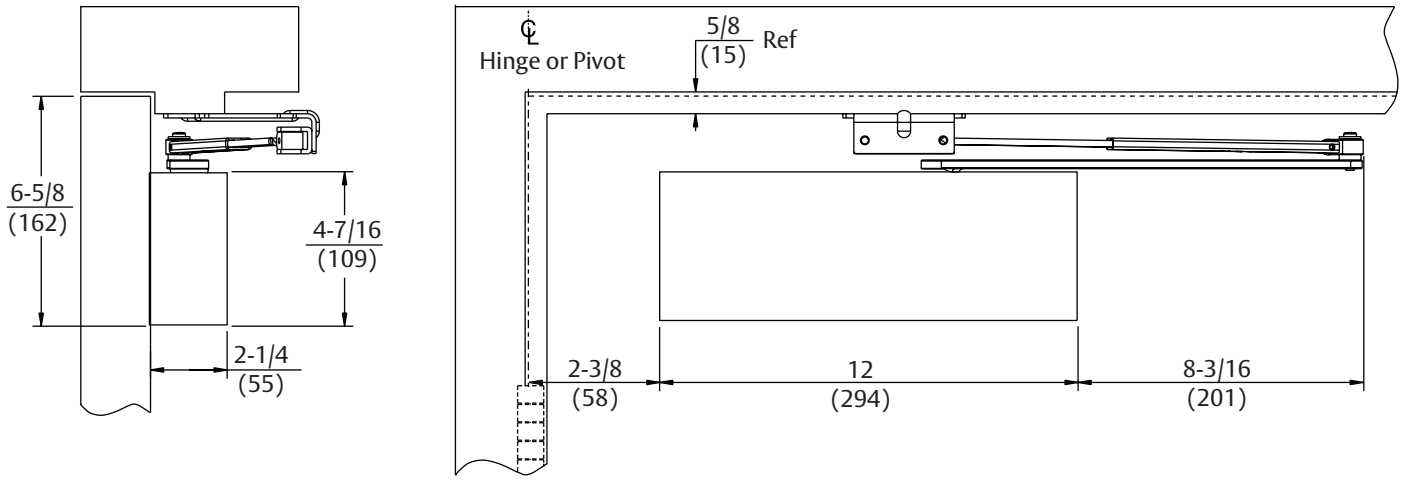

Arm Function	Minimum Top Rail
Non-Hold Open	5-1/4" (133)
Hold Open	

NOTES:
- Mounting holes for mounting bracket are spaced 1" (25mm) x 10" (254mm).
- Closers are tri-packed for regular arm, parallel arm and top jamb mounting. Parallel arm bracket is included.

NORTON RIXSON

ASSA ABLOY

9500 SERIES
CAST IRON DOOR CLOSER

TECHNICAL DETAILS – TOP JAMB

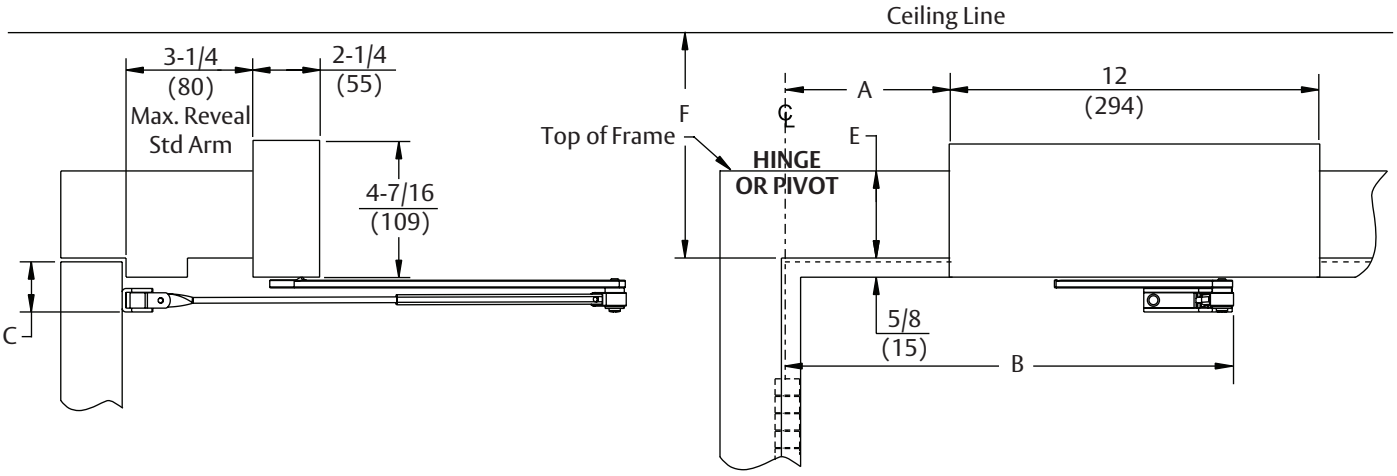

Maximum Opening	A	B	Hinge Condition
110°	7" (172)	16-1/16" (394)	Butts, Offset Pivots, and Swing Clear Hinges
140°	5-1/2" (135)	14-5/16" (351)	
180°	4" (98)	13-1/16" (320)	
140°	5-1/2" (135)	14-7/16" (354)	^Center Hung

Header Width	C Minimum Top Rail	E Header	F Ceiling Clearance
Standard	1-7/8" (48)	2-1/8" (54)	4" (102)
Narrow	2-1/4" (57)	2" (49)	3-5/8" (92)

Dimensions “A” and “B” are taken from centerline of hinge as shown and apply to pivot point of swing clear hinges. Offset and center hung pivots.

^Must be single-acting door.

NOTES:

- Mounting holes for mounting bracket are spaced 1" (25mm) x 10" (254mm).
- Closers are tri-packed for regular arm, parallel arm and top jamb mounting. Parallel arm bracket is included.

9500 SERIES
CAST IRON DOOR CLOSER

TECHNICAL DETAILS – PARALLEL RIGID ARM

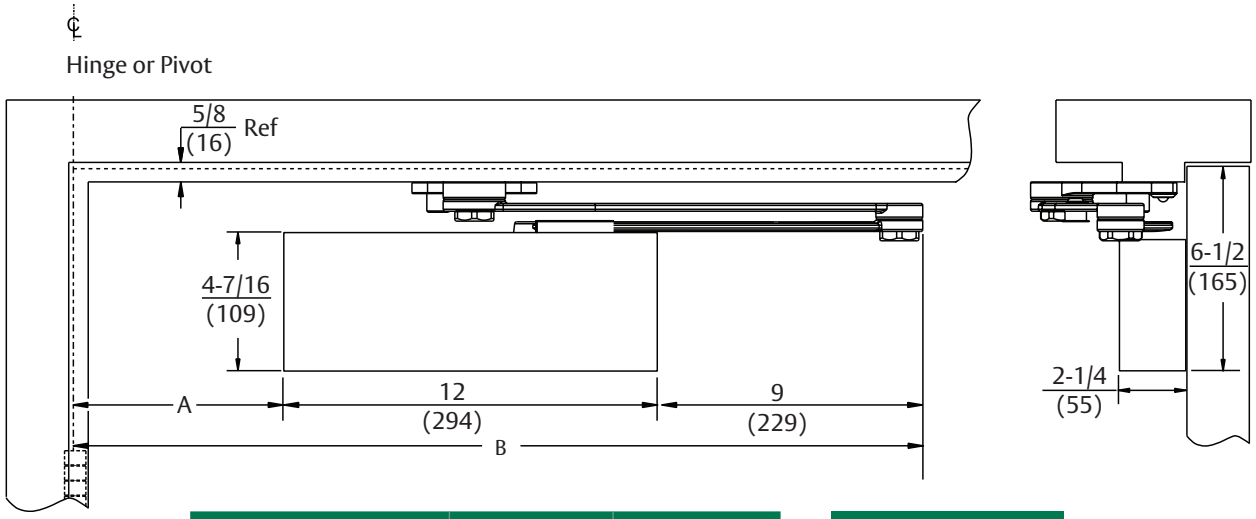

Maximum Opening	A	B
90°	6-7/8" (175)	27-7/8" (708)
180°	2-7/8" (73)	23-7/8" (606)

Minimum Top Rail
5" (127)

TECHNICAL DETAILS – PARALLEL RIGID, FRICTION HOLD OPEN ARM

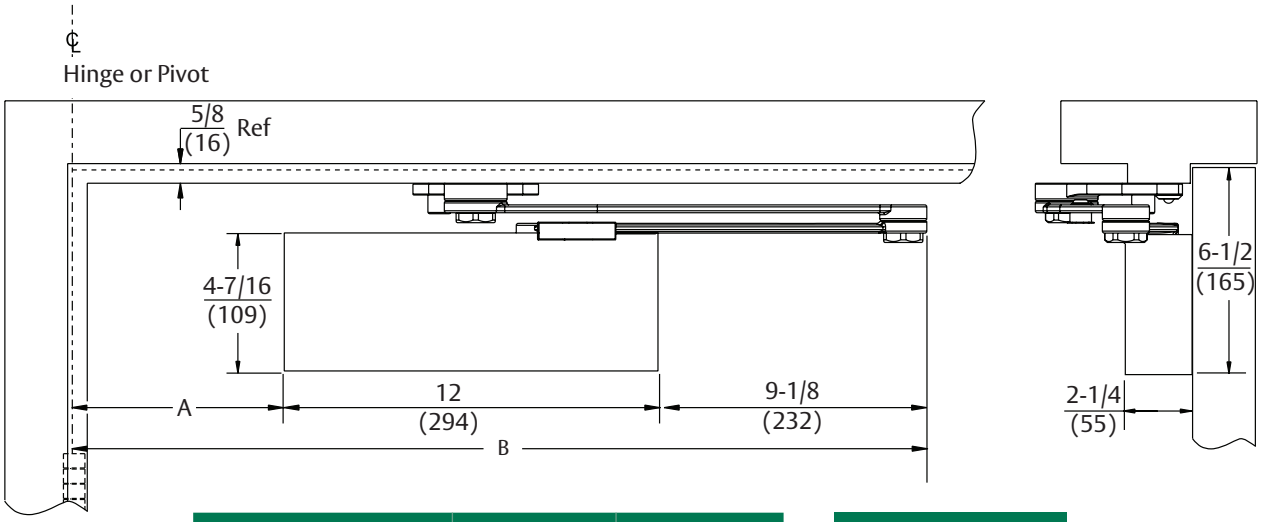

Maximum Opening	A	B
90°	6-1/2" (165)	27-5/8" (702)
180°	2-1/2" (64)	23-5/8" (600)

Minimum Top Rail
5" (127)

NOTE:
- Mounting holes for mounting bracket are spaced 1" (25mm) x 10" (254mm).

NORTON RIXSON

ASSA ABLOY

9500 SERIES
CAST IRON DOOR CLOSER

TECHNICAL DETAILS – CLOSER PLUS® ARM

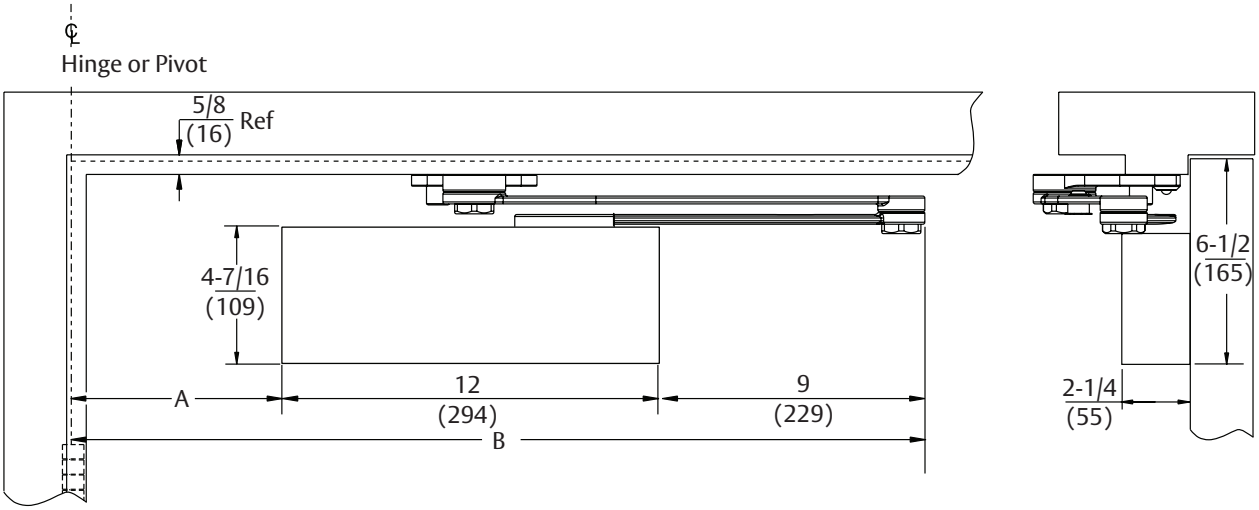

Maximum Opening	A	B
85°	7-3/4" (197)	28-3/4" (730)
90°	6-3/4" (171)	27-3/4" (708)
100°	5-1/4" (133)	26-1/4" (667)
110°	3-7/8" (98)	24-7/8" (631)

Minimum Top Rail
5" (127)

TECHNICAL DETAILS – PARALLEL RIGID, FRICTION HOLD OPEN ARM

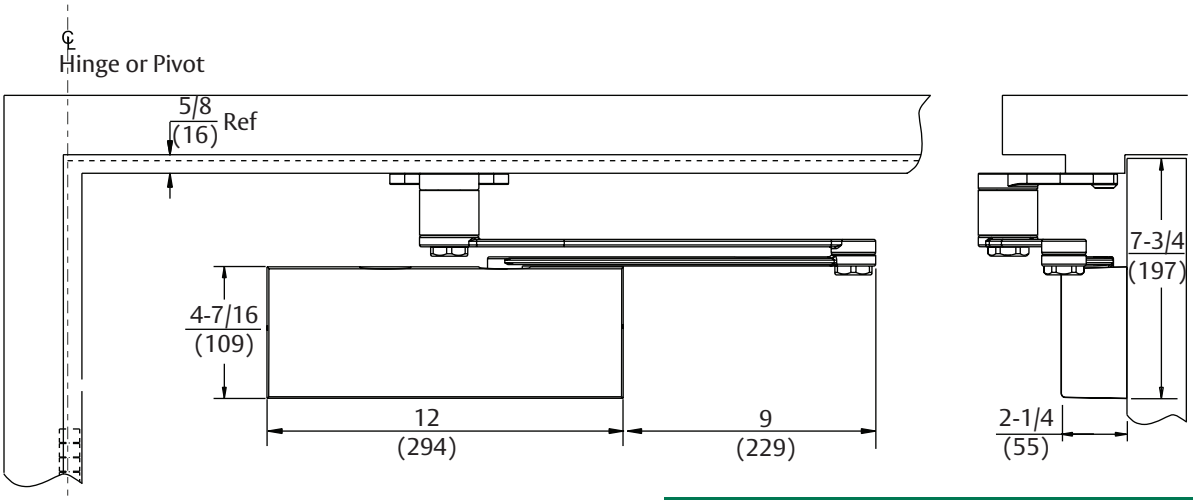

NOTE:
- Mounting holes for mounting bracket are spaced 1" (25mm) x 10" (254mm).

Minimum Top Rail of Door with 5/8" (16mm) Frame Stop	
Without 9500-1/2SP Spacer	With 9500-1/2SP Spacer
6-7/8" (175)	7-3/8" (187)

9500 SERIES
CAST IRON DOOR CLOSER

TECHNICAL DETAILS – REGULAR RIGID ARM

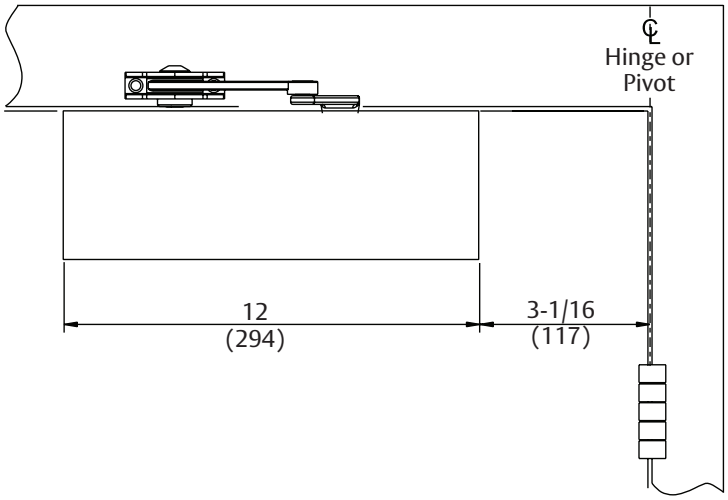

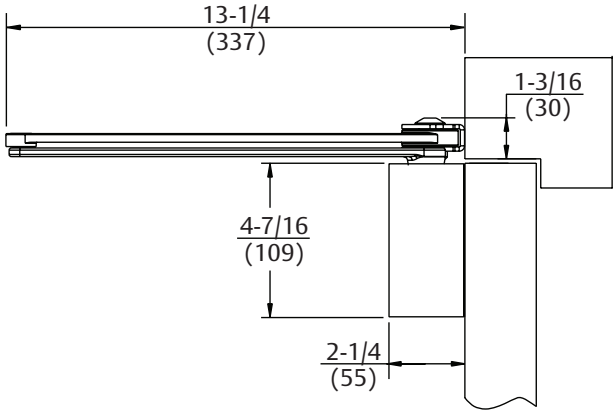

Minimum Header	Minimum Top Rail
1-5/8" (41)	3" (76)

NOTE:
- Mounting holes for mounting bracket are spaced 1" (25mm) x 10" (254mm).

NORTON RIXSON

ASSA ABLOY

9500 SERIES
CAST IRON DOOR CLOSER

TECHNICAL DETAILS – UNITROL® PARALLEL ARM

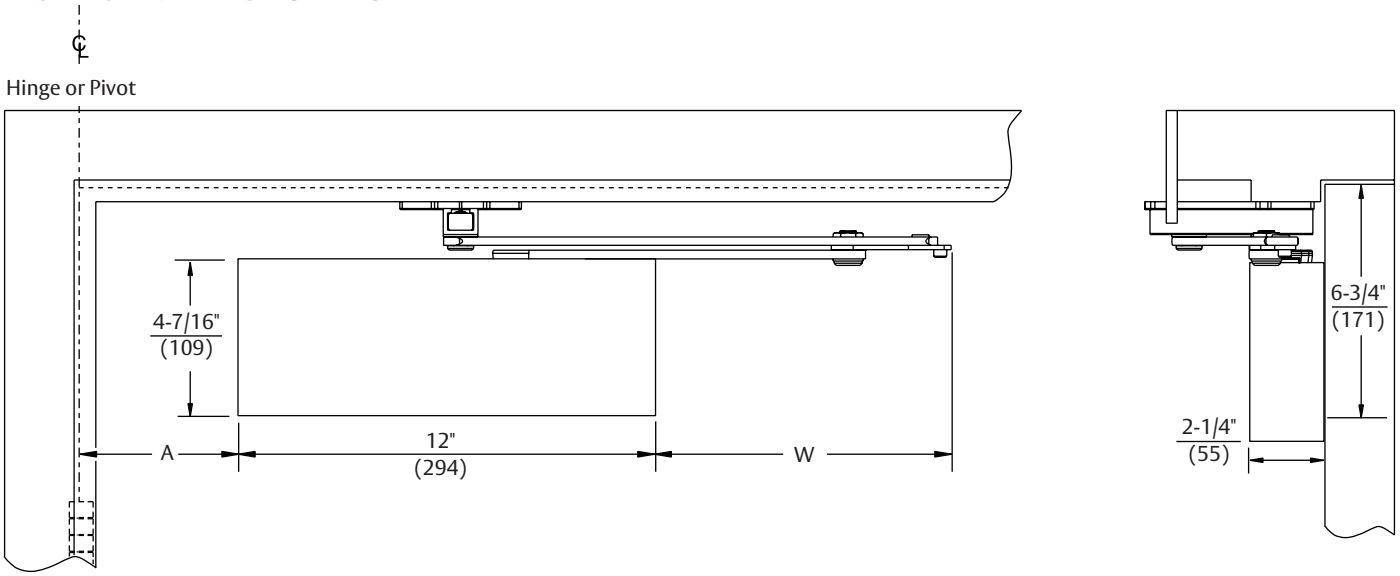

Opening		Doors 28" - 32"		Doors 33" - 41"		Doors 42" - 48"	
Hold Open	Dead Stop	A	W	A	W	A	W
85°	90°	4-3/4" (121)	8-1/2" (216)	5-3/8" (137)	10" (254)	5-7/8" (149)	11-3/8" (289)
90°	95°	4-1/4" (108)		4-7/8" (124)		5-3/8" (137)	
95°	100°	3-3/4" (95)		4-3/8" (111)		4-7/8" (124)	
100°	105°	3-3/8" (86)		3-7/8" (98)		4-3/8" (111)	
105°	110°	3" (76)		3-1/2" (89)		4" (102)	
110°	115°	2-3/4" (70)		3-1/4" (82)		3-5/8" (92)	

Minimum Top Rail
5" (127)

NOTE:

- Mounting holes for mounting bracket are spaced 1" (25mm) x 10" (254mm).

9500 SERIES
CAST IRON DOOR CLOSER

TECHNICAL DETAILS – PULL SIDE MOUNTING

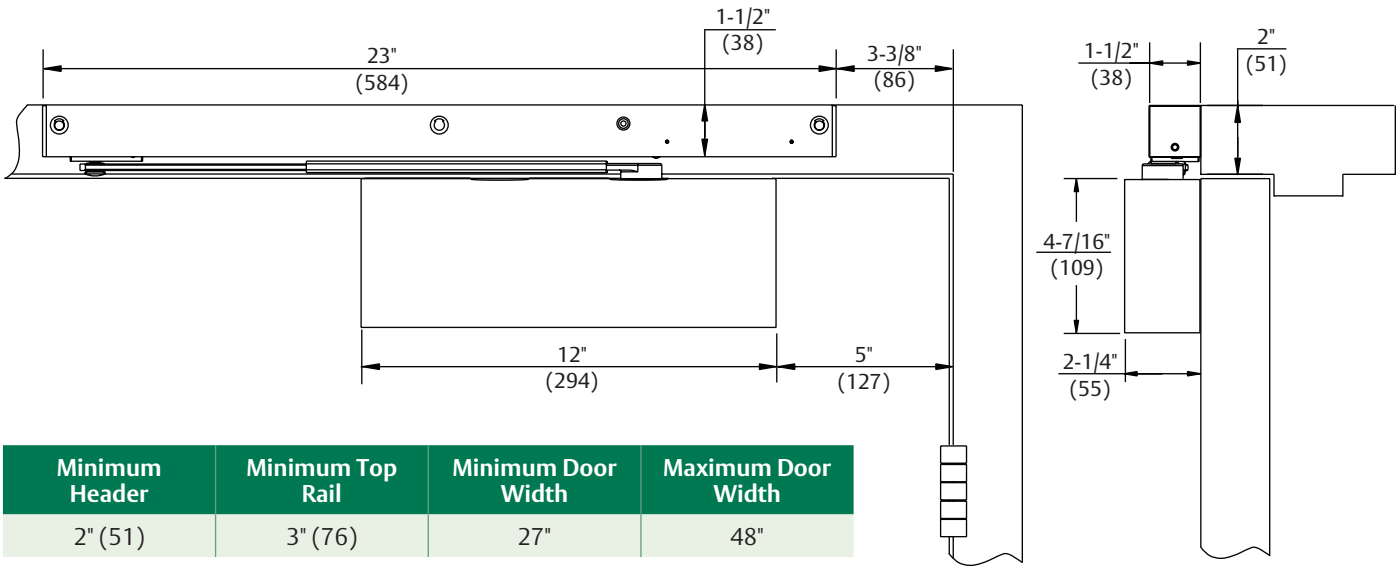

Minimum Header	Minimum Top Rail	Minimum Door Width	Maximum Door Width
2" (51)	3" (76)	27"	48"

TECHNICAL DETAILS – PUSH SIDE MOUNTING

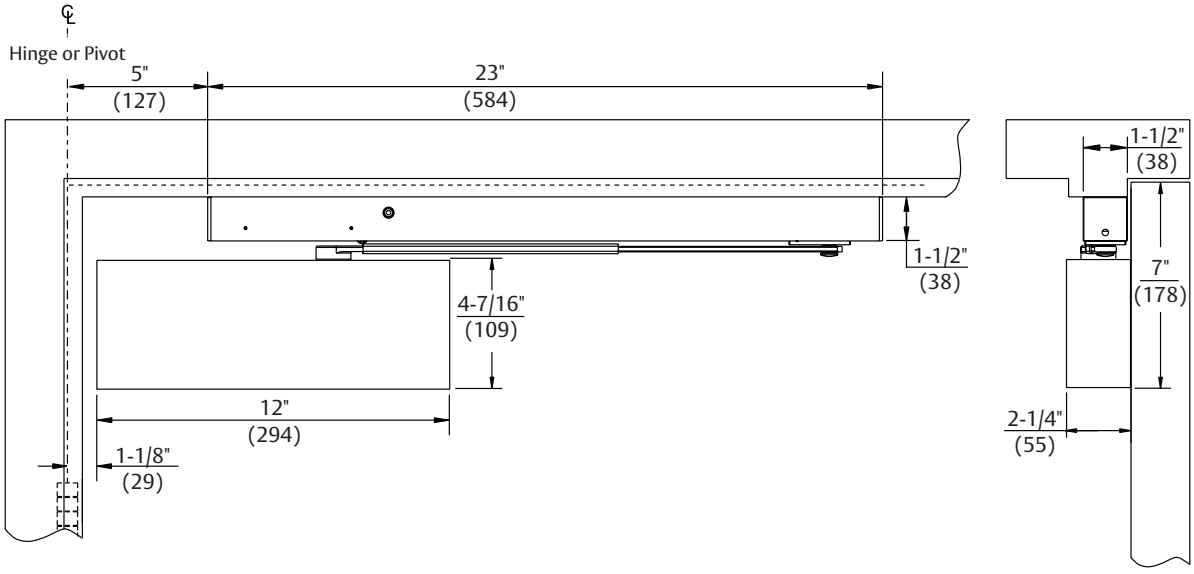

Minimum Top Rail	Minimum Door Width
5-1/2" (140)	29"

NOTE:

- Mounting holes for mounting bracket are spaced 1" (25mm) x 10" (254mm).

NORTON RIXSON

ASSA ABLOY

9500 SERIES
CAST IRON DOOR CLOSER

ARM OPTIONS

Regular Arm

9501-1
(Non-Hold Open)



9501-3
(Hold Open*)



- Used with Regular Arm mounting (pull side) and Top Jamb mounting (push side)
- Available in painted or plated finishes

	Part Number	Description
Non-Hold Open	9501-1W	Main arm & tube assembly
	9501-11	Rod & shoe assembly
	9500-HS	Hex screw package
Hold Open	9501-3W	Main arm & rod assembly
	9501-13	Hold open bracket assembly

Parallel Arm

9501-5
(Non-Hold Open)



9501-8
(Hold Open*)



- Mounted on push side
- Non-hold open arm – combines regular arm with parallel arm mounting bracket
- Hold open arm – combines regular hold open arm with parallel arm mounting bracket
- Available in painted or plated finishes

Top Jamb (Deep Reveal)



- Accommodates top jamb mounting for reveals from 3-3/8" (86mm) up to 7-1/4" (184mm), depending on door and frame conditions
- Mounted on push side
- Available in painted or plated finishes

	Part Number	Description
Non-Hold Open	9501-1B	**Arm Assembly**
	9501-2W	Main arm & arm tube assy
	9501-11B	Rod & shoe assembly
Hold Open	9501-3B	**Arm Assembly**
	9501-3WB	Main arm & rod assy
	9501-13	Hold open bracket assy

Specify finish when ordering arms.
*Not allowed by code on fire doors.

Experience a safer and more open world

9500 SERIES
CAST IRON DOOR CLOSER

ARM OPTIONS

Parallel Rigid Arm

PR9501-5
(Non-Hold Open)



- Recommended for high-use, high-abuse environments
- Tamper-resistant, solid forged steel riveted arm
- Mounted on push side
- Not available in plated finishes

Parallel Rigid - Friction Hold Open Arm*



- Recommended for high-use, high-abuse environment
- Requires auxiliary stop
- Allows door to swing 180°, conditions permitting
- Handed
- Mounted on push side
- Not available in plated finishes

Arm Assemblies	Handing
PR9501-8R	Right Hand
PR9501-8L	Left Hand

CloserPlus® Arm

9770-5
(Non-Hold Open)



9870T-8
(Hold Open)*



- Recommended for high-use, high-abuse environments
- Tamper-resistant, solid forged steel riveted arm (mounted on push side)
- Field-reversible steel lug restricts degree of opening to protect door, wall and hardware
- Requires both backcheck valves on closer
- Shipped standard as left hand. Handing can be reversed in the field
- Not available in plated finishes

Specify finish when ordering arms.
*Not allowed by code on fire doors.

NORTON RIXSON

ASSA ABLOY

9500 SERIES
CAST IRON DOOR CLOSER

ARM OPTIONS

Parallel Rigid Offset Arm



Arm Assemblies	Arm Function
PRO9501-5	Non-Hold Open

- Recommended for high-use, high-abuse environments
- Provides additional vertical clearance
- Mounted on push side
- Not available in plated finishes

Standard Clearance	Blade Spacer Part Number	Total Clearance
1-3/4"	9500-1/2SP	2-1/4"
	9500-5/8SP	2-3/8"

Regular Rigid Arm

R9501-1
(Non-Hold Open)



- Recommended for high-use, high-abuse environments
- Tamper-resistant, solid forged steel riveted arm
- Mounted on pull side
- Not available in plated finishes

Unitrol® Parallel Arm

(Non-Hold Open)



(Hold Open)*



- Recommended for high-use, high-abuse environments
- Integrates a door closer, shock absorber and auxiliary heavyduty overhead stop
- Requires both backcheck valves on the closer
- Hold open*
  - Holder mechanism tension adjustable
  - Hold open can be engaged/disengaged with a 1/4 turn of the mechanism with a standard blade type screwdriver
- Not available in plated finishes

Door Width	Arm Assemblies	
	Non-Hold Open	Hold Open*
28" - 32" (71cm - 81cm)	9100-11	9100-1
33" - 41" (84cm - 104cm)	9100-13	9100-3
42" - 48" (107cm - 122cm)	9100-14	9100-4

Specify finish when ordering arms.
*Not allowed by code on fire doors.

9500 SERIES
CAST IRON DOOR CLOSER

TRACK OPTIONS

Pull Side Track



- Provides a clean aesthetic look with maximum 100° door swing and a minimum door width of 28" (71cm)
- Mounted on pull side
- Hold open can be set for 85°, 90°, 95°, or 100°
- Not available in plated finishes

	Part Number	
Arm/Track Function	Track Only	Arm Only
Non-Hold Open	9501ST-1T	9501ST-1A
Hold Open	9501ST-3T	

Push Side Track



- Clean aesthetic look for doors opening a maximum of 100° and a minimum door width of 32" (81cm)
- Backcheck option recommended
- Mounted on push side
- Hold open*
  - From 85° to 100°
  - Turn knob offers the use the option of turning hold open on or off
- Not available in plated finishes

	Part Number	
Arm/Track Function	Track Only	Arm Only
Non-Hold Open	9501ST-5T	9501ST-1A
Hold Open	9501ST-8T	

Specify finish when ordering arms.
*Not allowed by code on fire doors.

NORTON RIXSON

ASSA ABLOY

9500 SERIES
CAST IRON DOOR CLOSER

COVERS AND PLATES

Full Plastic Cover

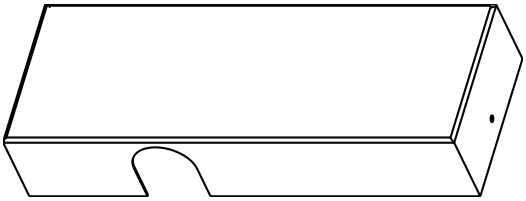

9500P
- Completely covers closer body
- Non-handed
- Dimensions: 12" (294) x 4-7/16" (109) x 2-1/4" (55)
- Available in painted finishes only

Full Metal Cover

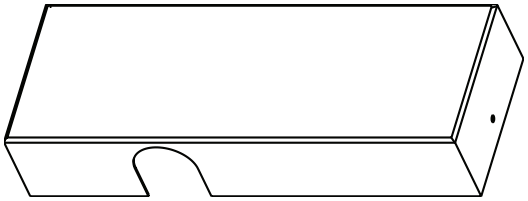

- For use in high-abuse applications
- Specify hand; not field reversible
- Dimensions: 12" (294) x 4-7/16" (109) x 2-1/4" (55)
- Available in painted and plated finishes

Part Numbers	Handing
9500M-R	Right Hand
9500M-L	Left Hand

Drop Plate

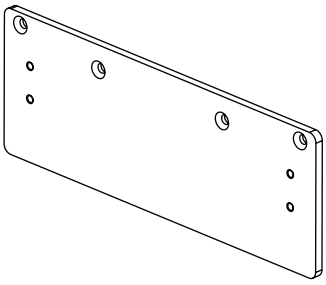

- Permits parallel arm or top jamb mounting on door when top rail is too narrow to install closer in the regular manner
- Minimum 2" (51mm) top rail required
- To order separately, specify Part No. x Finish

Drop Plate	Used with:
9586	Regular Arm or Pull Side Track
9587	Top Jamb
9588	Parallel Arm or Push Side Track

9500 SERIES
CAST IRON DOOR CLOSER

BRACKETS

Mounting Bracket



9500-CMB
- Standard on all closers
- Reduces installation time
- Ensures correct mounting
- Bracket is first mounted to door or frame, then closer is attached
- Bracket size: 3-5/8" (92mm) x 11-1/2" (292mm)
- Hole spacing: 1" (25mm) x 10" (254mm)

Parallel Arm Hold Open Bracket



9528H
- Converts regular arm hold open to parallel arm hold open closer
- Standard with parallel arm hold open mounting

Mortise Arm Bracket for Regular Arm Mounting



9500-MAB
- For regular arm mounting where frame requires reinforcement, i.e., on frames with bull nose trim
- Not available in plated finishes

Parallel Arm Offset Bracket



9500-OB
- Required when parallel arm is used in conjunction with an overhead door holder

Parallel Arm Non-Hold Open Bracket



9518
- Converts regular arm to parallel arm closer
- Standard with parallel arm mounting

Parallel Arm Flush Transom Bracket



9500-PFTB
- Required when parallel arm mounting is used on a flush transom application
- Not available in plated finishes

Specify finish when ordering parts.

NORTON RIXSON

ASSA ABLOY

9500 SERIES
CAST IRON DOOR CLOSER

BRACKETS

Reinforcing Bracket

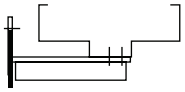

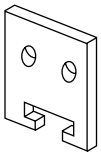

9500-RB

- Supplied as standard for use with Unitrol® arms
- Provides additional support to the soffit plate on installations with door frame reveals from 1-7/8" to 4-5/8" (48 to 117mm)
- Not available in plated finishes

Flush Transom Bracket



9500-FTB

- Available separately for mounting Parallel Rigid and CloserPlus® arms rabbeted or flush transom conditions
- Not available in plated finishes

Deep Reveal Reinforcement Kit

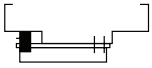

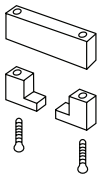

9500-DRK

- For use with Unitrol® arms
- Used to support the soffit plate on installations with wide frames.
- Clamps may be used with or without the spacer block, depending on frame conditions
- Not available in plated finishes
- For frames deeper than 4-5/8" (117mm), specify closer x 9500-DRK

Blade Stop Spacer*



Spacer Size	Part Number
1/2"	**9500-1/2SP**
5/8"	**9500-5/8SP**

*Not for use with Unitrol arms

Flush Partition Bracket

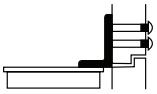

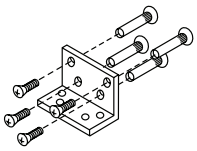

9500-FPB

- For use with Unitrol® arms where rabbeted or flush transom conditions prevent installation of the soffit plate assembly
- Bracket fastens to the overhead transom to provide a mounting surface for the soffit plate assembly
- Specify closer x 9500-FP

Angle Support Bracket

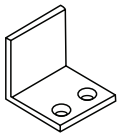

9500-AB

- Available separately for mounting Parallel Rigid and CloserPlus® arms heavy-duty arms on narrow frame or soffit conditions
- Specify closer x 9500-AB

Power Adjustment Arm Bracket

Maximum Power



Normal Power



- Standard on all closers without hold open, except heavy-duty and track type
- In regular arm or top jamb mounting, bracket may be reversed to increase closing power 15%

Specify finish when ordering parts.

9500 SERIES
CAST IRON DOOR CLOSER

PARTS LIST

DOOR CLOSER BODY ASSEMBLIES

Part Number	Description
9500LAP	Multi-Size Closer Body

SCREW PACKS

SP9500	Standard screw package
SP9500SN	Standard screw pack (includes sex nuts)
SP9500SNB	Sex Nuts and Bolts (SNB) for 1-3/4" door
95ASW	Main arm screw & washer
SP9500COV	Cover screw pack

FASTENERS

Self drilling screws (for properly reinforced wood and metal doors) are supplied standard.

Sleeve nuts and bolts (SNB) are supplied standard with Parallel Rigid, CloserPlus® and Unitrol® arms and Slide Track (push and pull) closers. SNB's are optional for Tri-Style® packed closers (Regular, Top Jamb and Parallel arms). Torx® machine screws are optional for all 9500 series.

TORX® SCREW PACKS

Arm Type	Part Number
Regular, Top Jamb & Parallel	TX95
Parallel Rigid, CloserPlus®	PRTX95
Regular Rigid Heavy-Duty	RTX95
Unitrol® Arm	UNITX95
Slide Track	TXTK95
70TK	Torx® tool kit

FINISHES

Norton Rixson offers waterborne acrylic, polyster powder coat and plated finishes. Custom finishes are available on special order. A sample and approval is required.

Waterborne acrylic and polyester powder coat will withstand 100 hours of salt spray (ANSI requires 25 hours).

Specify BHMA Designation	Description
600[1]	Prime Coat
605[2]	Bright Brass
606[2]	Satin Brass
611[2]	Bright Bronze
612[2]	Satin Bronze
613E	Dark Oxidized Satin Bronze - Equivalent
619[2]	Satin Nickel
625[2]	Bright Chrome
626[2]	Satin Chrome

1 600 is a special rust-inhibiting prime coat. Closers can be ordered prime coat only (specify closer x 600). An additional charge applies if finish coat is required over prime coat.

2 Plated finish

Specify BHMA Designation	Description	Complements the following finishes
689	Aluminum	628, 625, 629, 630, 651, 652
690	Statuary Bronze	640, 613
691	Dull Bronze	612, 637, 639
693	Black	315
694	Medium Amber	313
696	Gold	605, 606, 632, 633
BSP	Black Suede Powder	
WSP	White Suede Powder	

* Closer bodies and plastic covers are available in waterborne acrylic finishes. Arms and metal covers are available in powder coat or plated finishes.

NORTON RIXSON

ASSA ABLOY

9500 SERIES
CAST IRON DOOR CLOSER

HOW TO ORDER

NOTE: For optimum protection of door and frame assemblies, always use auxiliary wall, floor, or overhead door stop.

PR
Prefixes

9500
Defines closer series

H
Suffixes

No Prefix } 9500 series designates Tri-Style® packaging (regular arm, top jamb and parallel arm)
PR – Parallel rigid arm (parallel arm only); specify hand for hold open functions.
PRO – Parallel rigid arm with offset soffit plate (parallel arm only); specify hand for hold open applications.
PS – 9500ST for push side mounting only.
R – Rigid heavy-duty regular arm. (Torx® screws not included).
CLP – CloserPlus® arm (parallel arm only).
UNI – Unitrol® arm (parallel arm only - specify **door width**). Frame reveals 1-7/8" to 4-5/8" (48-117mm) standard.

None – Non-hold open arm function.
H – Hold open arm function (specify hand when "PR" prefix is ordered).
M – Metal cover.
DA – Optional delayed action feature.
ST – Slide track - single lever arm (auxiliary stop recommended). For push side - prefix PS.
T – Thumbturn hold open on CloserPlus® (CLP).

NOTE:
- Before installing a door closer, verify the accessibility, fire, and life-safety requirements that are in effect. This includes the mounting height and projection into the clear opening. Check the adopted state and local building codes and consult the Authority Having Jurisdiction (AHJ)
- To maintain the warranty and ensure proper operation of the product, follow the installation instructions & templates and install on the inside of the building.
- Consult NFPA 80 for the hinge requirements on a fire door.
- Failure to use fasteners supplied with closer may void factory warranty.
- Optional fasteners are available for a variety of applications. Consult the door and frame manufacturer to ensure the proper fasteners are used to maintain certifications.
- Sizing charts are based on 1-3/4" x 7' standard weight doors swinging to 110°. Other application conditions (e.g. larger door heights or weight) may require larger size closer. Adjusting the spring power to meet the low opening force requirements of the Americans With Disabilities Act or ANSI/BHMA Standard A117.1, may not provide adequate closing power to dependably close and latch the door in some conditions (i.e. air movement from wind gusts or building stack pressure).

NORTON RIXSON

ASSA ABLOY

9540 SERIES
CAST IRON DOOR CLOSER

INTRODUCTION

The 9540 Series are premium, cast iron door closers for moderate-to-high traffic applications with ANSI/BHMA Grade 1 certification for a long-life of reliability. A direct replacement for LCN 4040XP door closers, the 9540 Series is an ideal retrofit solution for retail, office, government and other commercial facilities.



FEATURES

- Cast iron closer body
- Retrofits LCN 4040XP
- Non-hold open
- Non-handed
- Rack-and-pinion design
- Standard, separate and independent, latch, sweep and backcheck intensity valves
- Pressure relief valves for both opening and closing cycles, protect the door and frame from damage, and reduces maintenance costs
- Staked valves
- 2-1/4" (57mm) projection
- 1-1/2" (38mm) diameter piston
- 5/8" (16mm) diameter pinion journals
- Mounting bracket
- Tri-style® packaging: packed for regular, top jamb or parallel arm mounting
- Adjustable spring sizes 1-6
- Molded ABS plastic cover
- 30-year limited warranty

OPTIONAL FEATURES

- Metal covers
- Delayed Action

NORTON RIXSON

ASSA ABLOY

9540 SERIES
CAST IRON DOOR CLOSER

OVERVIEW

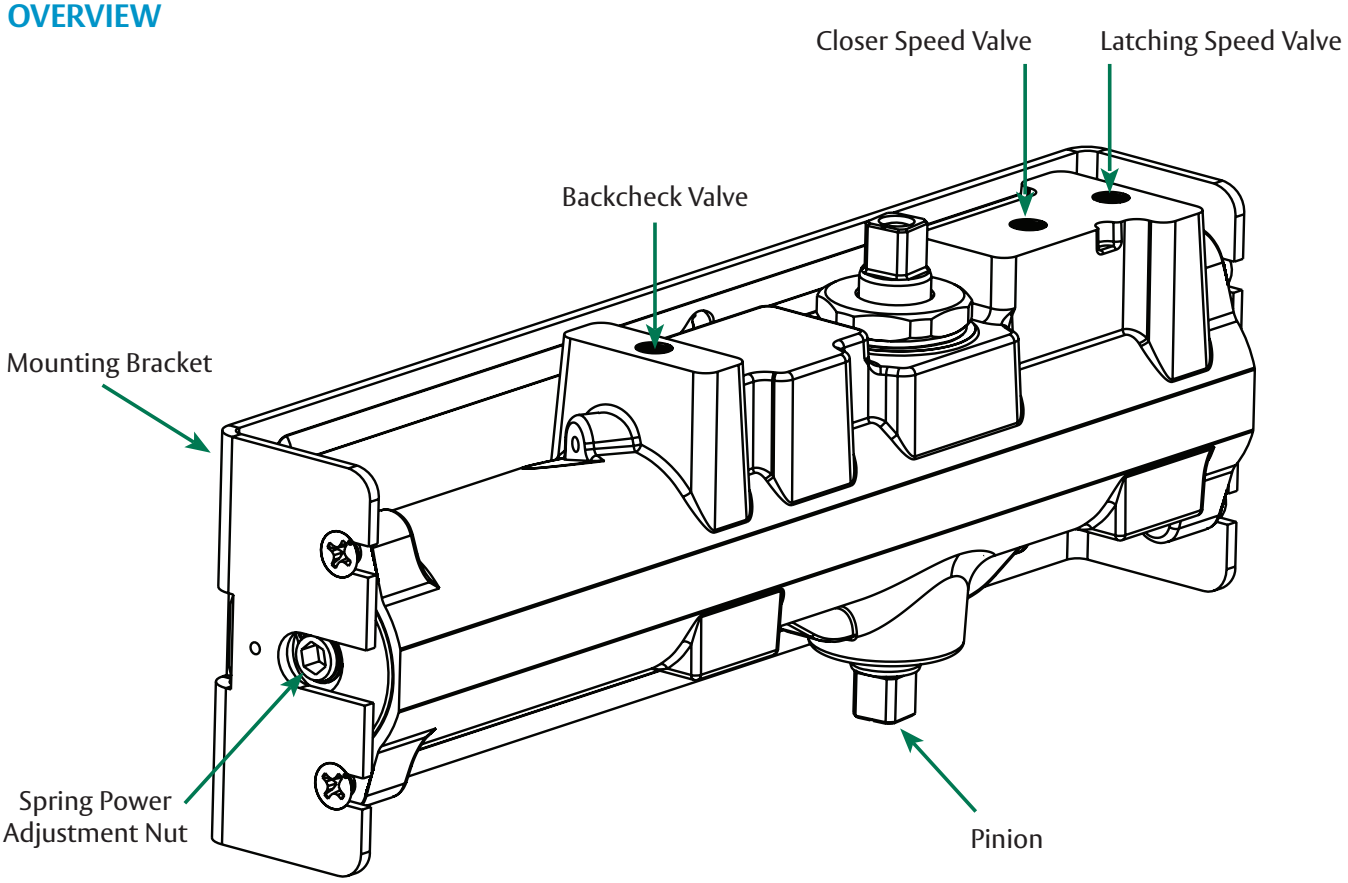

CERTIFICATIONS

- ANSI/BHMA A156.4, Grade 1 certifed
- UL / cUL listed for use on fire rated doors
- UL10C listed for positive pressure fire test
- Complies with requirements for the Americans with Disabilities Act (A.D.A) and ANSI standard A117.1
- This product is manufactured in an ISO 9001, ISO 14001 facility

CAUTION: Door Closers for Low Opening Force Applications:
Door closers installed in openings required to meet the requirements of the Americans With Disabilities Act or ANSI/BHMA Standard A117.1, when adjusted to meet those requirements, may not provide adequate closing power to dependably close and latch the door based on opening or site conditions.

NORTON RIXSON

ASSA ABLOY

9540 SERIES
CAST IRON DOOR CLOSER

TECHNICAL DETAILS-REGULAR ARM

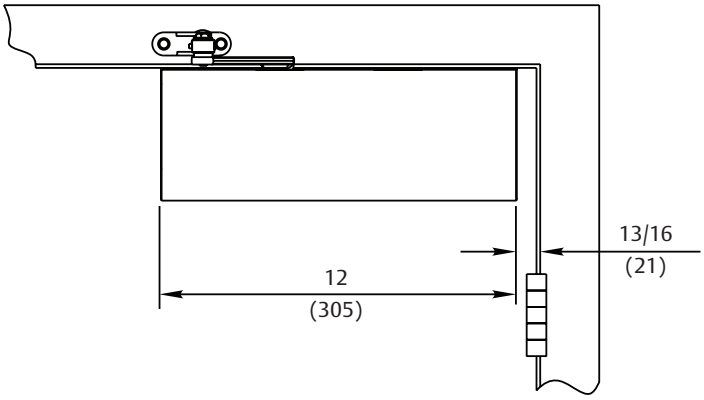

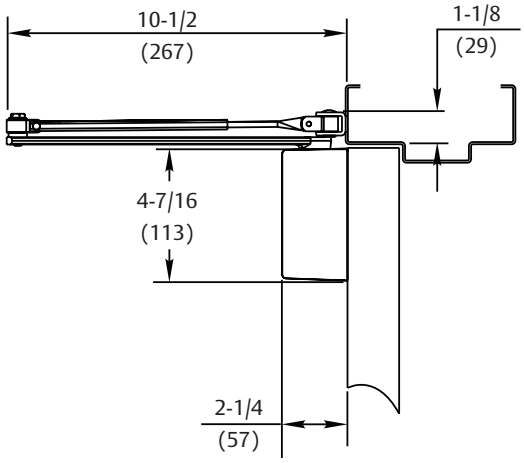

Maximum Door Swing: 120°

TECHNICAL DETAILS - PARALLEL ARM

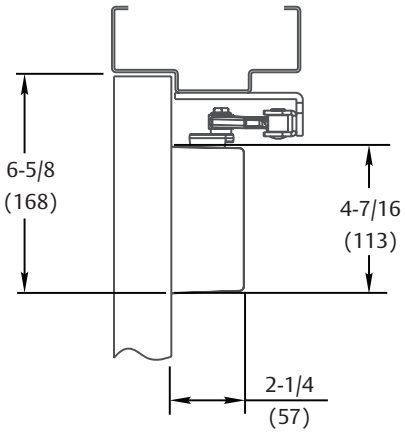

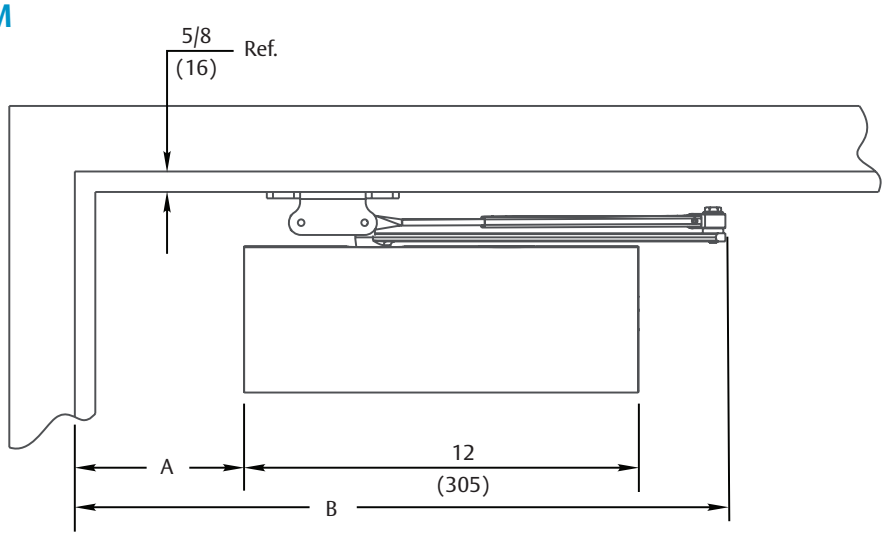

Door Swing	Dimension "A"	Dimension "B"
90°	8-3/16 (208)	22-7/8 (581)
120°	6-5/8 (168)	21-3/8 (543)
180°	5-3/16 (132)	19-7/8 (505)

Minimum Top Rail: 5-5/8" (143)

TECHNICAL DETAILS - TOP JAMB

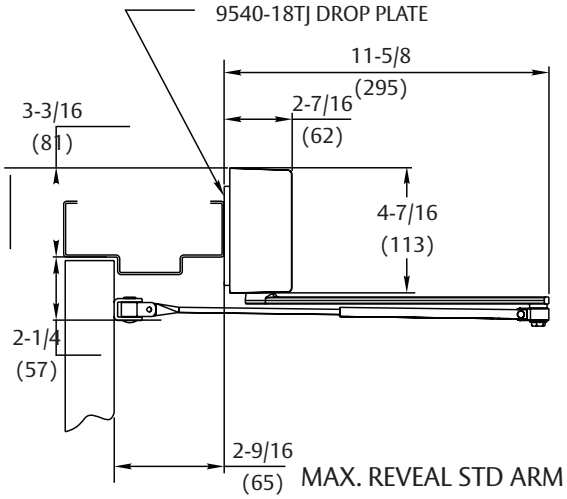

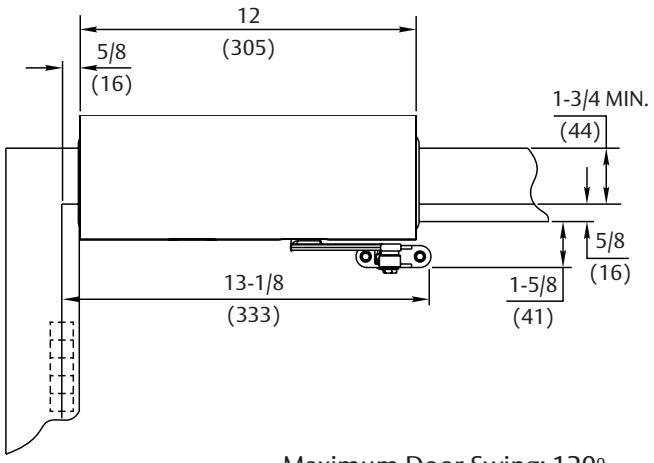

Maximum Door Swing: 120°

Note:

- Closers are tri-packed for regular arm, parallel arm and top jamb mounting. Parallel arm bracket is included.

NORTON RIXSON

ASSA ABLOY

9540 SERIES
CAST IRON DOOR CLOSER

ARM OPTIONS

REGULAR & TOP JAMB ARMS
9541-1
(NON-HOLD OPEN)

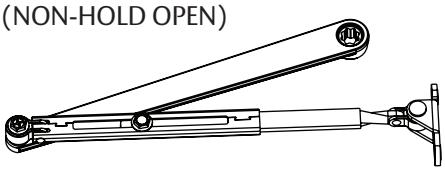

- Used with Regular Arm mounting (pull side) and Top Jamb mounting (push side)
- Top Jamb arm will accommodate reveals up to 2-9/16" (65mm)
- Available in painted or plated finishes

PARALLEL ARM
9541-5
(NON-HOLD OPEN)

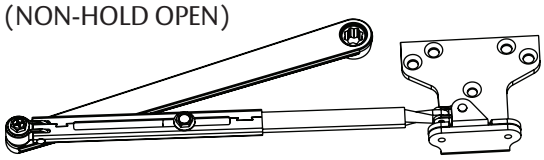

- Mounted on push side
- Non-hold open arm – combines regular arm with parallel arm mounting bracket
- Hold open arm – combines regular hold open arm with parallel arm mounting bracket
- Available in painted or plated finishes

TOP JAMB (DEEP REVEAL)

(NON-HOLD OPEN)

Arm Assembly	Reveal
9541-1A	2-9/16" – 4-13/16" (65-122mm)
9541-1B	4-13/16" – 8" (122-203mm)

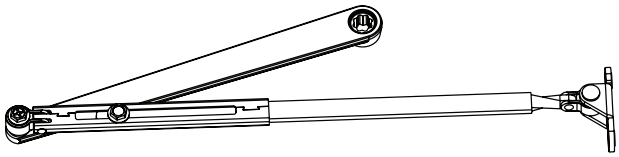

- Mounted on push side
- Available in painted or plated finishes

MOUNTING BRACKET
9540-CMB

- Standard on all closers
- Reduces installation time
- Ensures correct mounting
- Bracket is first mounted to door or frame, then closer is attached
- Bracket size: 3-5/8" (92mm) x 11-1/2" (292mm)
- Hole spacing: 1" (25mm) x 10" (254mm)

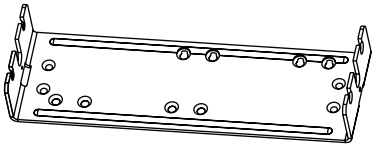

PARALLEL ARM NON-HOLD OPEN BRACKET
9548

- Converts regular arm to parallel arm closer
- Standard with parallel arm mounting

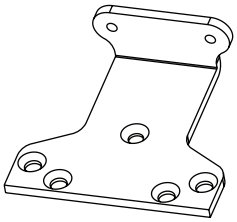

NORTON RIXSON

ASSA ABLOY

9540 SERIES
CAST IRON DOOR CLOSER

COVERS AND PLATES

ABS PLASTIC COVER
9500P

- Completely covers closer body
- Non-handed
- Dimensions: 12" (294) x 4-7/16" (109) x 2-1/4" (55)
- Available in painted finishes only

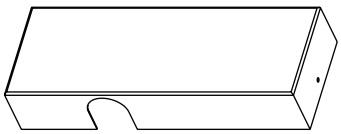

METAL COVER

- For use in high-abuse applications
- Specify hand; not field reversible
- Dimensions: 12" (294) x 4-7/16" (109) x 2-1/4" (55)
- Available in painted and plated finishes

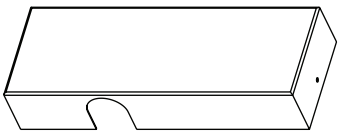

Part Numbers	Handing
9540M-1	Right Hand Application
9540M-2	Left Hand Application

DROP PLATES

9540-18 REGULAR ARM

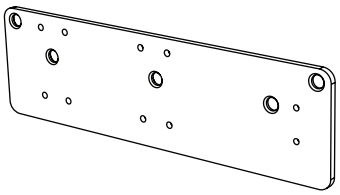

9540-18PA PARALLEL ARM

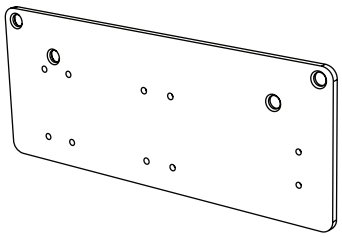

9540-18TJ TOP JAMB

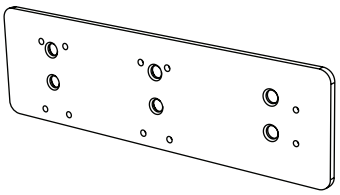

For top jamb mounting with low ceiling clearance, contact Technical Product Support Dept. at 800-438-1951 x 6030.

PARTS LIST

DOOR CLOSER BODY ASSEMBLIES

Part Number	Description
9500LAP	Multi-Size Closer Body

LAP = LESS ALL PARTS

SCREW PACKS

Part Number	Description
SP9540	Standard screw package
SP9540SNB	Sex Nuts and Bolts (SNB) for 1-3/4" door
95ASW	Main arm screw & washer
SP9500COV	Cover screw pack

Experience a safer and more open world

NORTON RIXSON

ASSA ABLOY

9540 SERIES
CAST IRON DOOR CLOSER

HOW TO ORDER

NOTE: For optimum protection of door and frame assemblies, always use auxiliary wall, floor, or overhead door stop.

J — **Prefixes**

9540 — Defines Closer Series

M — **Suffixes**

689 — **Finish**

No Prefix – Tri-style® packaging includes 9548 parallel arm bracket
J – Top Jamb Installation Reveals 2-9/16" - 4-13/16" (65-122mm)
JL – Top Jamb Installation Reveals 4-13/16" - 8" (122-203mm)

None – Non-hold open arm function
M – Metal cover; specify handing
DA – Optional delayed action feature

FASTENERS

Self drilling screws (for properly reinforced wood and metal doors) are supplied standard.

Sex Nuts & Bolts (SNB's) are optional for Tri-Style® packed closers (Regular, Top Jamb and Parallel arms).

FINISHES

Norton Rixson offers waterborne acrylic, polyster powder coat and plated finishes. Custom finishes are available on special order. A sample and approval is required.

Waterborne acrylic and polyester powder coat will withstand 100 hours of salt spray (ANSI requires 25 hours).

Specify BHMA Designation	Description
600[1]	Prime Coat
605[2]	Bright Brass
606[2]	Satin Brass
611[2]	Bright Bronze
612[2]	Satin Bronze
613E	Dark Oxidized Satin Bronze - Equivalent
619[2]	Satin Nickel
625[2]	Bright Chrome
626[2]	Satin Chrome

Specify BHMA Designation	Description	Complements the following finishes
689	Aluminum	628, 625, 629, 630, 651, 652
690	Statuary Bronze	640, 613
691	Dull Bronze	612, 637, 639
693	Black	315
694	Medium Amber	313
696	Gold	605, 606, 632, 633
BSP	Black Suede Powder	
WSP	White Suede Powder	

1 600 is a special rust inhibiting prime coat. Closers can be ordered prime coat only (specify closer x 600). An additional charge applies if finish coat is required over prime coat.
2 Plated finishes.

- Closer bodies and plastic covers are available in waterborne acrylic finishes. Arms and metal covers are available in powder coat or plated finishes.
- When a plated finish is ordered, arm and cover will be plated unless "cover only" is specified.

NOTES:

- Before installing a door closer, verify the accessibility, fire, and life-safety requirements that are in effect. This includes the mounting height and projection into the clear opening. Check the adopted state and local building codes and consult the Authority Having Jurisdiction (AHJ)
- To maintain the warranty and ensure proper operation of the product, follow the installation instructions & templates and install on the inside of the building.
- Consult NFPA 80 for the hinge requirements on a fire door.
- Failure to use fasteners supplied with closer may void factory warranty.
- Optional fasteners are available for a variety of applications. Consult the door and frame manufacturer to ensure the proper fasteners are used to maintain certifications.
- Sizing charts are based on 1-3/4" x 7' standard weight doors swinging to 110°. Other application conditions (e.g. larger door heights or weight) may require larger size closer. Adjusting the spring power to meet the low opening force requirements of the Americans With Disabilities Act or ANSI/BHMA Standard A117.1, may not provide adequate closing power to dependably close and latch the door in some conditions (i.e. air movement from wind gusts or building stack pressure).

NORTON RIXSON

ASSA ABLOY

410 SERIES
DOOR CLOSER

INTRODUCTION

The 410 Series Cast Iron Door Closers provide an attractive retrofit solution for retail, office, government and other commercial facilities. Heavy-duty and hold open arms, along with adjustable spring size, backcheck, closing and latch speed, provide a flexible and economical closer that you can trust. The 410 Series is certified to ANSI/BHMA Grade 1 requirements for long life and reliability, and offers a 10 year warranty.



NORTON RIXSON

ASSA ABLOY

410 SERIES
DOOR CLOSER

FEATURES

- Adjustable spring sizes 1–6
- Cast iron closer body
- Standard and heavy-duty arms available as hold open or non-hold open
- Adjustments for backcheck, closing and latch speed
- Tri-packed for regular, parallel or top jamb installation
- Sleeve nuts and bolts provided with each closer
- Retrofit for LCN 4040XP
- Non-handed
- Plastic cover
- Delayed Action (optional)
- 10 year warranty

CERTIFICATIONS

- Certified for ANSI/BHMA A156.4 Grade 1
- 90 minute positive pressure fire rating per UL10c and CAN / ULC S104
- Meets requirements for Americans with Disabilities Act (ADA) and ANSI/BHMA A117.1

CAUTION: Door Closers for Low Opening Force Applications:

Door closers installed in openings required to meet the requirements of the Americans With Disabilities Act or ANSI/BHMA Standard A117.1, when adjusted to meet those requirements, may not provide adequate closing power to dependably close and latch the door based on opening or site conditions.

APPLICATIONS

Standard Arms

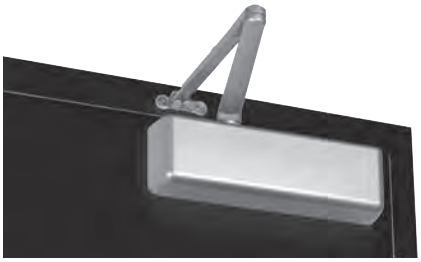

TPN arm shown (regular mounting)

- Pull-side application
- Closer mounted on the door

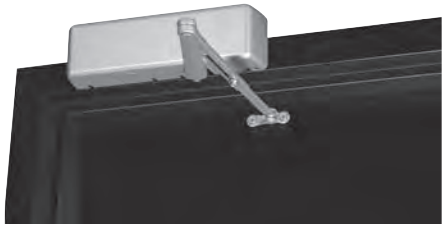

TPN arm shown (top jamb mounting)

- Push-side application
- Closer mounted on the frame
- Minimum top rail = 2-1/4" (57mm)
- Maximum frame reveal = 2-3/4" (70mm)

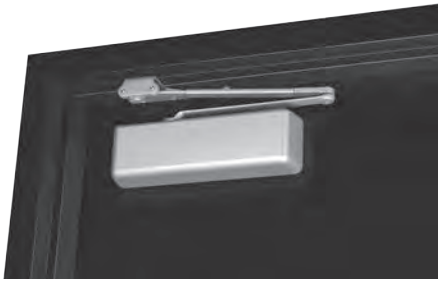

TPN arm shown (parallel mounting)

- Push-side application
- Closer mounted on the door

Heavy Duty Arms

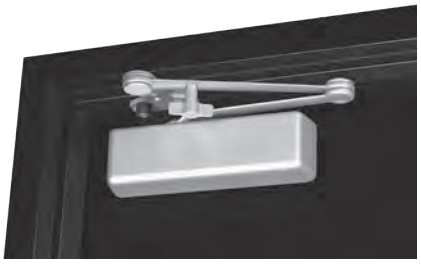

HDH arm (with stop) shown

- Push-side application
- Heavy-duty arm
- Stop is removable

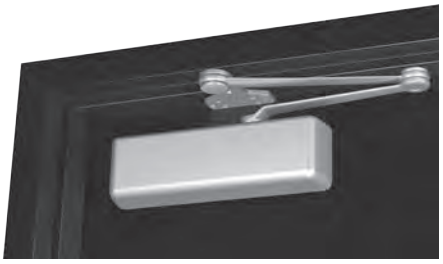

HDN arm (without stop) shown

- Push-side application
- Heavy-duty arm
- Stop is removable



CPS arm shown

- Push-side application
- Heavy-duty arm
- Buffer spring provides greater protection at the end of door opening cycle
- Spring is removable

NOTE: Arms are not interchangeable with Norton Rixson premium door closers.

NORTON RIXSON

ASSA ABLOY

410 SERIES
DOOR CLOSER

MODEL/PART NUMBERS

Model #	Description
410xTPN	Non-Hold Open, Tri-Packed
410DAxTPN	Non-Hold Open, Delayed Action, Tri-Packed
410xTPH	Hold Open, Tri-Packed
410xHDN	Heavy-Duty, Non-Hold Open with Removable Stop
410xHDH	Heavy-Duty, Hold Open with Removable Stop
410xCPS	Heavy-Duty, Non-Hold Open with Removable Stop and Spring Buffer
410xCPST	Heavy-Duty, Hold Open with Removable Stop and Spring Buffer



MISCELLANEOUS PARTS*

Part Number	Description
410COV	Cover
SP410	Screw Pack
2730KIT	CPS Kit

*Specify finish when ordering



CPS Kit

COVER DIMENSIONS

Cover Dimensions		
Width	Length	Projection
3-1/2" (89mm)	12-1/4" (311mm)	2-1/4" (57mm)



OPTIONAL FASTENERS

Part Number	Description
SN-134	Sex Nuts
TBGN134-47	Through-Bolts & Grommet Nuts

Note: Sex nuts furnished standard with all models.

ACCESSORIES

Closer Mounting Plates	
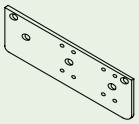	**410RDP** Narrow Frame Drop Plate (regular arm): Required for hinge side mount where top rail is less than 3-3/4" (95mm). Plate requires 2" (51mm) minimum top rail.
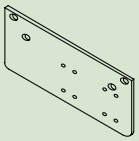	**410PDP** Narrow Top Rail Drop Plate (parallel arm): Required for parallel arm mounting where top rail is less than 5-1/2" (140mm), measured from the stop. Plate requires 2" (51mm) minimum top rail.

410 SERIES
DOOR CLOSER

HOW TO ORDER

410 – Defines Closer Series

- **410** – Standard
- **410DA** – Delayed Action (only available with TPN arm)

X

TPN – Arm Assemblies

- **TPN** – Tri-Packed (Regular, Parallel, Top Jamb Mounting), Non-Hold Open
- **TPH** – Tri-Packed (Regular, Parallel, Top Jamb Mounting), Hold Open
- **HDN** – Heavy Duty, Non-Hold Open with Removable Stop
- **HDH** – Heavy Duty, Hold Open with Removable Stop
- **CPS** – Heavy Duty, Non-Hold Open with Removable Stop and Spring Buffer
- **CPST** – Heavy Duty, Hold Open with Removable Stop and Spring Buffer

X

689 – Finish

- **689** – Aluminum
- **690** – Dark Bronze

Note:

- Before installing a door closer, verify the accessibility, fire, and life-safety requirements that are in effect. This includes the mounting height and projection into the clear opening. Check the adopted state and local building codes and consult the Authority Having Jurisdiction (AHJ)
- To maintain the warranty and ensure proper operation of the product, follow the installation instructions & templates and install on the inside of the building.
- Consult NFPA 80 for the hinge requirements on a fire door.
- Failure to use fasteners supplied with closer may void factory warranty.
- Optional fasteners are available for a variety of applications. Consult the door and frame manufacturer to ensure the proper fasteners are used to maintain certifications.
- Sizing charts are based on 1-3/4" x 7' standard weight doors swinging to 110°. Other application conditions (e.g. larger door heights or weight) may require larger size closer. Adjusting the spring power to meet the low opening force requirements of the Americans With Disabilities Act or ANSI/BHMA Standard A117.1, may not provide adequate closing power to dependably close and latch the door in some conditions (i.e. air movement from wind gusts or building stack pressure).

CLOSERS COMPARISON

	CAST IRON			ALUMINUM							
CERTIFICATION & WARRANTY	**9500**	**9540**	**410**	**2800ST**	**7500**	**8000**	**1600**	**1700**	**78B/F**	**210**	**160**
ANSI/BHMA A156.4	Grade 1	Grade 1	Grade 1	Grade 1	Grade 1	Grade 1	Grade 1	Grade 3	—	Grade 1	Grade 1
UL & ULC Listed	Yes	Yes	Yes	Yes	Yes	Yes	Yes	Yes	Yes	Yes	Yes
Warranty	30 Year	30 Year	10 Year	10 Year	30 Year	30 Year	30 Year	5 Year	10 Year	10 Year	5 Year
Extended Cycle Testing	25 Million	Per Standard	Per Standard	N/A	25 Million	25 Million	25 Million	Per Standard	Per Standard	Per Standard	Per Standard
End of Life Recycling Program Available	Yes	Yes	Yes	Yes	Yes	Yes	Yes	Yes	Yes	Yes	Yes
SIZE & CONSTRUCTION											
Construction (Body)	Cast Iron	Cast Iron	Cast Iron	Aluminum	Aluminum	Aluminum	Aluminum	Aluminum	Aluminum	Aluminum	Aluminum
Mounting Hole Pattern	1" x 10"	2-1/4" x 5"*	2-1/4" x 5"*	1"x 11-1/8"	2-3/8" x 6-3/4"	3/4" x 12"	3/4" x 9-1/16"	3/4" x 8"	4-1/8" x 1-3/8"	3/4" x 12"	3/4" x 9-1/16"
Spring Size	Adjustable 1-6	Adjustable 1-6	Adjustable 1-6	Adjustable 1-6	Adjustable 1-6	Adjustable 1-6	Adjustable 1-6 Size 3, 4	Size 3, 4	Size 2-4; Size 5-6	Adjustable 1-6	Adjustable 1-4 Size 4
Closer Body (Handing)	Non-Handed	Non-Handed	Non-Handed	Non-Handed	Non-Handed	Non-Handed	Non-Handed	Non-Handed	Handed	Non-Handed	Non-Handed
Standard Backcheck	Yes	Yes	Yes	Yes	Yes	Yes	Yes	Yes	Yes	Yes	Yes
OPTIONS											
Plastic Cover	Standard	Standard	Standard	Standard	Standard	Standard	Optional	Standard	No	Standard	Optional
Metal Cover Option	Optional	Optional	No	No	Optional	Optional	No	No	No	No	No
Slim Line Cover Option	No	No	No	No	No	Optional	No	No	No	No	No
Delayed Action Option	Yes	Yes	Yes	No	Yes	Yes	No	No	Yes	No	No
Sex Nuts & Bolts (Tri-Style® pack)	Optional	Optional	Standard	Optional	Optional	Optional	Optional	Optional	Optional	Standard	Standard
Finishes	Multiple	Multiple	689, 690 only	Multiple	Multiple	Multiple	Multiple	689, 690 only	Multiple	689, 690 only	689, 690 only
APPLICATION / ARM TYPE AVAILABILITY											
Regular	•	•	•		•	•	•	•	•	•	•
Top Jamb	•	•	•		•	•	•	•		•	•
Parallel	•	•	•		•	•	•	•	•	•	•
Regular Rigid	•				•	•					
Parallel Rigid	•				•	•	•		•		
Heavy Duty: HDH/HDN			o							o	
CloserPlus	•				•	•	•				
CloserPlus Spring			o		•	•	•				
CloserPlus Ramp					•	•					
Cushion Stop							•				
Unitrol	•				•	•	•		•		
Low Profile					•	•					
Slide Track	•			•	•	•					

* Retrofit LCN4040XP
o Specific to Individual Series

The ASSA ABLOY Group is the global leader in access solutions. Every day, we help billions of people experience a more open world.

ASSA ABLOY Opening Solutions leads the development within door openings and products for access solutions in homes, businesses and institutions. Our offering includes doors, frames, door and window hardware, mechanical and smart locks. access control and service.

Since 1880, Norton Rixson door controls have been an integral part of schools, hospitals and businesses around the globe. When you need products and people that perform at the highest level, rely on Norton Rixson – From Open to Close.

Norton Rixson | www.nortonrixson.com
3000 Highway 74 East | Monroe, NC 28112 | 877.974.2255

ASSA ABLOY Opening Solutions
Door Security Solutions Canada | www.assaabloy.ca
160 Four Valley Drive | Vaughan, ON L4K 4T9 | 800.461.3007

43506-A 02/22

Norton Rixson is a brand associated with ASSA ABLOY Accessories and Door Controls Group, Inc., an ASSA ABLOY Group company. Copyright © 2022, ASSA ABLOY Accessories and Door Controls Group, Inc. All rights reserved. Reproduction in whole or in part without the express written permission of ASSA ABLOY Accessories and Door Controls Group, Inc. is prohibited.