MS-4000: ShootingStar Reader

The MS-4000 ShootingStar Reader

The MS-4000 ShootingStar Reader is intended for installation on a solid metal surface, in proximity applications where a vandal-proof reader is required. The reader is housed in a weatherproof, bulletproof stainless steel package.

1.0 Specifications

1.1 Dimensions

- 5.25 inches High x 2.00 inches Wide x 0.75 inches Deep
- 13.35 cm High x 5.08 cm Wide x 1.91 cm Deep

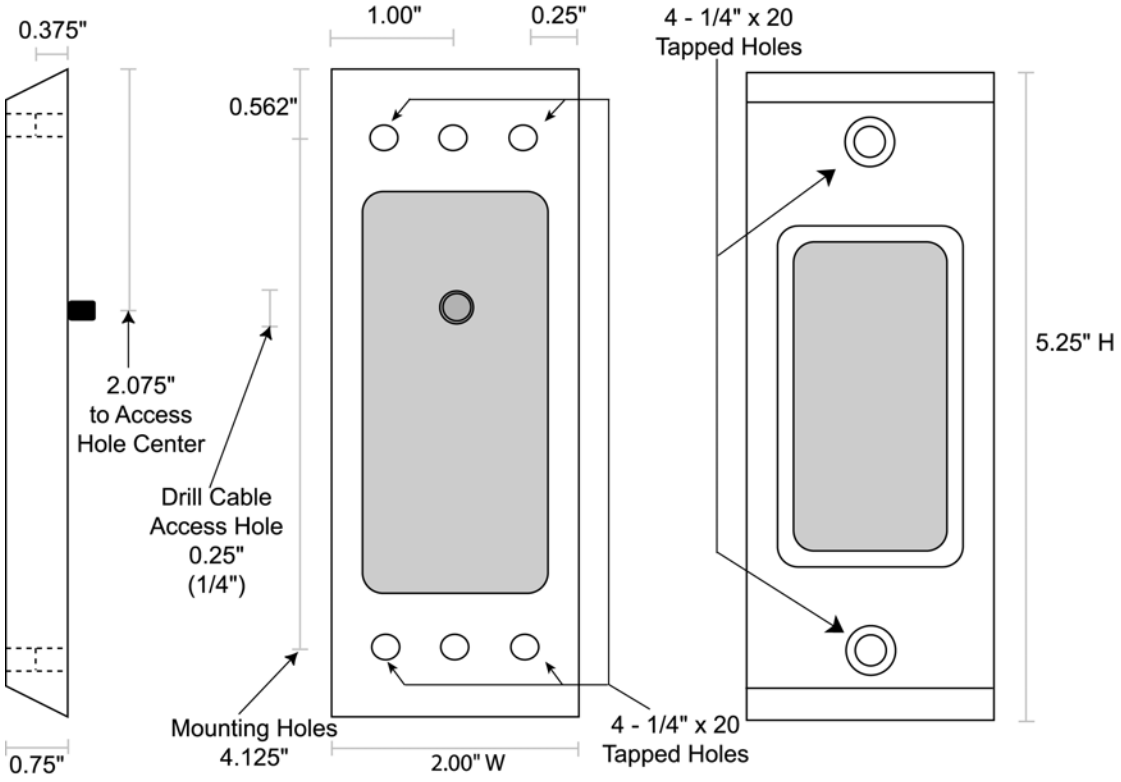

Figure 1: MS-4000 Dimensions

2305 Bering Drive
San Jose, CA 95131 USA
(800) 260-5265 (408) 435-8400 FAX (408) 577-1792
Web: www.kerisys.com E-mail: sales@kerisys.com

MS-4000: ShootingStar Reader

1.2 Operating Voltage

- 5v to 14v DC @ 50 ma

1.3 Cable Specifications

- up to 500 feet using six conductor, shielded, stranded AWG 24 wire (such as Belden 9536)

2.0 Mounting Instructions

There are two methods for mounting the ShootingStar Reader on a solid metal surface (see Figure 1 on page 1).

1. To mount the reader from the outside, three holes need to be drilled. One through-hole (0.25" – 1/4") accommodates the reader cable. Two holes correspond with two 1/4", countersunk through-holes in the face of the reader (hole size is dependent upon the size of the mounting screw).
2. To mount the reader from the inside, five holes need to be drilled. One through hole (0.25" – 1/4") accommodates the reader cable. Four 1/4" through holes correspond with four 1/4" x 20 tapped holes in the back of the reader. Drill these holes to accommodate 1/4" x 20 bolts.

NOTE: Do not mount the reader near sources of Electromagnetic Interference (EMI) such as a computer monitor. EMI degrades a reader's read range.

3.0 Connections

The ShootingStar Reader does not require configuration; there are no switches or jumpers to set. The ShootingStar Reader is normally connected to a PXL-250, PXL-100, or IntelliProx, but can be connected to an alternative host controller/alarm panel through an IntelliProx used in its Wiegand input device mode. All connections needed to support the reader are made through the reader's cable. Three of the wires on the MS-4000 cable are not used (Brown, White, and Green). Please consult the tables on pages 2 and 3 for specific connection instructions.

3.1 PXL-250 Connections

The "A" reader connects to TB5, pins 1, 3 and 4 (no connection is made to pins 2, 5, 6, and 7).
The "B" reader connects to TB6 pins 1, 3 and 4 (no connection is made to pins 2, 5, 6, and 7).

Connecting to the PXL-250 – TB5 or TB6

Pin #	Function	Wire Color
1	Reader Antenna	Blue
2	no connection	–
3	Reader Power	Red
4	Reader Ground	Black
4	Shield	Silver
5	no connection	–
6	no connection	–
7	no connection	–

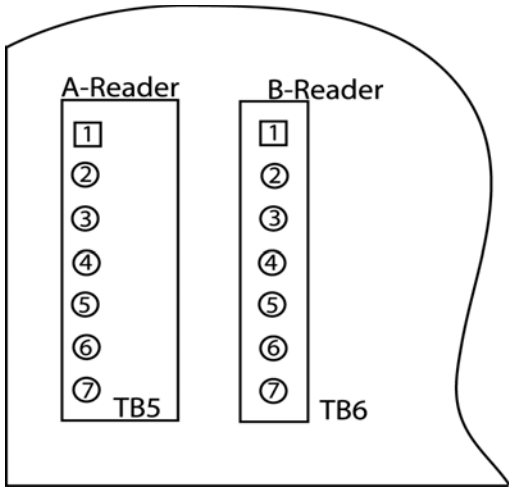

Figure 2: PXL-250 Connections

MS-4000: ShootingStar Reader

3.2 Design 5 PXL-100 Connections

The "A" reader connects to TB2, pins 14 through 19. The "B" reader connects to TB3, pins 20 through 25.

Connecting the PXL-100 – TB2

Pin #	Function	Wire Color
14	no connection	–
15	no connection	–
16	Reader Power	Red
17	Reader Ground	Black
17	Shield	Silver
18	Reader Antenna	Blue
19	no connection	–

Connecting to the PXL-100 – TB3

Pin #	Function	Wire Color
20	no connection	–
21	no connection	–
22	Reader Power	Red
23	Reader Ground	Black
23	Shield	Silver
24	Reader Antenna	Blue
25	no connection	–

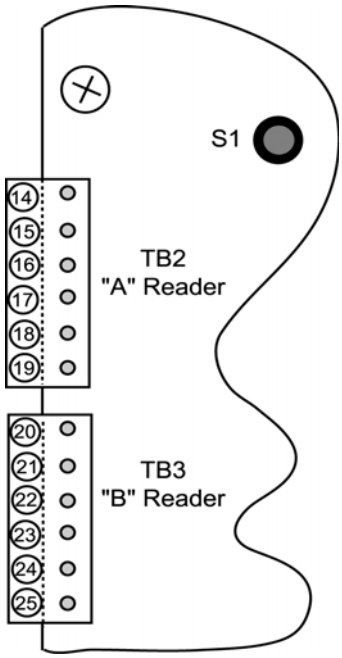

Figure 3: Design 5 PXL-100 Connections

NOTE: Please contact customer support at Keri Systems for information regarding connecting a Reader to a Design 4 PXL-100. A Design 4 PXL-100 can be identified by the location of its power connection made at the middle of the left edge of the printed circuit board.

3.3 IntelliProx Connections

The reader is connected to TB1, pins 1, 5, and 6 (no connection is made to pins 2, 3, and 4).

Connecting to the IntelliProx – TB1

Pin #	Function	Wire Color
1	Reader Antenna	Blue
2	no connection	–
3	no connection	–
4	no connection	–
5	Reader Power	Red
6	Reader Ground	Black
6	Shield	Silver

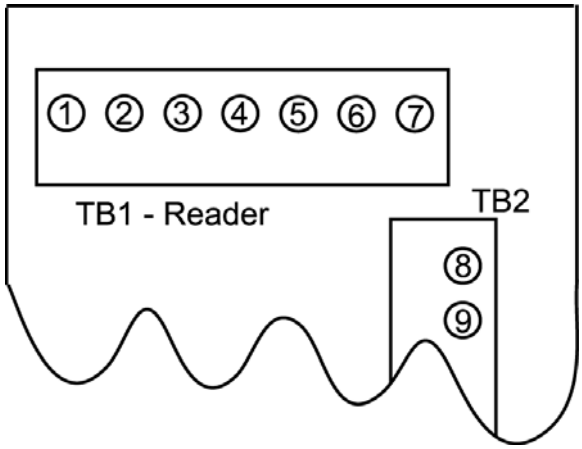

Figure 4: IntelliProx Connections

MS-4000: ShootingStar Reader

4.0 Installation Verification

The following information applies to an installation with a Keri Systems controller or IntelliProx unit. When used with an alternative host controller/alarm panel through an IntelliProx used in its Wiegand input device mode, the actions of the reader are controlled by the alternative host controller/alarm panel and might not match those of a Keri Systems controller.

The reader's power is provided by the controller, so the reader is powered on when the controller is powered on.

Since the ShootingStar Reader does not have an LED or beeper to annunciate reader status, the only way to verify reader operation is to present an enrolled card or tag to the reader and see that the door associated with the reader and controller unlocks. This is valid for the PXL-250, PXL-100, and IntelliProx.

The ShootingStar reader's range will be up to 1 inch depending upon the installation conditions, the material on which the reader is mounted, and whether it is a card or a key tag being read. The metal surrounding and protecting the reader's electronics limits the reader's read range. Because of this, the key tag is the preferred proximity device. Its small size allows the entire key tag to be presented within the reader's field. Cards can be used, but they must be presented to the reader in a manner that places a large portion of the card within the reader's field. Figure 5 shows how this is done.

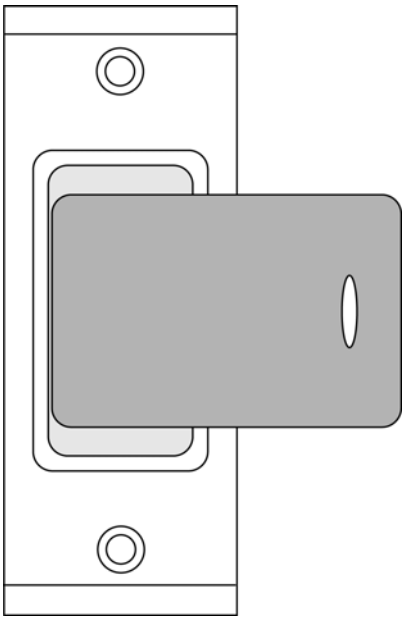

Figure 5: Presenting a Card to an MS-4000

Refer to the Troubleshooting the Reader Installation section beginning on page 7 if the reader is not functioning properly.

5.0 Troubleshooting the Reader Installation

Problem	Probable Cause	Corrective Action
The reader does not recognize a card/tag.	1. One or more of the reader's wiring connections are incorrect.	• Power down the controller and verify the wiring connections are correct for the reader/controller combination per the instructions provided in the Connections section on pages 2 and 3.
	2. The reader is not receiving proper power from the controller.	• Verify the voltage supplied to the reader is between 5 and 14 VDC.
	3. The reader is mounted too close to a device that radiates electromagnetic interference.	• Devices such as computer monitors radiate electromagnetic interference that affects read range. When possible, relocate either the reader or the device to provide a greater distance between the two.
	4. A jumper is not set correctly on the controller.	• For a PXL-250: Verify there is a jumper across pins 1 and 2 of JP4 (refer to the Technical Reference manual for more information - Keri p/n 01836-001). • For a PXL-100: If the controllers are using TAP™ software, verify JP1 on the controller and the jumper on the Receiver card[1] are installed across both jumper pins. If the controllers are using Doors™ software, verify JP1 on the controller and the Receiver card[1] are not installed across both pins (typically the jumper will be installed onto one of the pins to keep it available). • For an IntelliProx: Verify there is not a jumper across pins 1 and 2 of JP1 (typically the jumper can be installed onto one of the pins to keep it available).
	– contined next page –	

1. The receiver board's jumper is on the underside of the board. Gently pull the receiver board away from the controller, verify the jumper setting is correct per your application, carefully align the connectors on the receiver board with the pins on the controller, and gently push the receiver board back into place.

MS-4000: ShootingStar Reader

Problem	Probable Cause	Corrective Action
	5. You are using an incorrect type of card.	• Make sure you are using an access card that is compatible with the reader.
	6. The reader is unable to read the card.	• Verify there is nothing that can interfere between the reader and the access card.
The reader has a short read range.	1. The reader's controller is not properly grounded.	• Ensure there is a quality earth ground connection made to the controller. Refer to the controller's documentation for specific information regarding the earth ground connection.
	2. The shield wire for the reader's cable has opened somewhere between the reader and the controller.	• Verify the shield line from the controller to the reader is one continuous, connected line. Refer to the controller's installation documentation and verify the shield line is correctly connected to the controller.
	3. The reader is mounted too close to a device that radiates electromagnetic interference.	• Devices such as computer monitors radiate electromagnetic interference that affects read range. When possible, relocate either the reader or the device to provide a greater distance between the two.
	4. The controller is mounted too close to a device that radiates electromagnetic interference.	• Devices such as computer monitors radiate electromagnetic interference that affects read range. When possible, relocate either the controller or the device to provide a greater distance between the two.
	5. The reader is powered by a switching power supply.	• Switching power supplies are EMI sources. Change to a linear, regulated power supply.