CX Series Magnetic Lock Mounting Accessories

CX-91S & CX-92S SERIES ACCESSORIES

Brackets

CX-MA0610*
L Bracket for 600 lb. Magnetic Lock



CX-MA0613*
L & Z Bracket
For 600 lb.
Magnetic Lock



CX-MA1210*
L Bracket For 1,200 lb. Magnetic Lock



CX-MA1213*
L & Z Bracket
For 1,200 lb.
Magnetic Lock



Filler Plates

CX-MA0614-12
1/2" Filler Plates For 600 lb. Magnetic Lock



CX-MA0614-38
3/8" Filler Plates For 600 lb. Magnetic Lock



CX-MA0614-58
5/8" Filler Plates For 600 lb. Magnetic Lock



CX-MA1214-12*
1/2" Filler Plates For 1,200 lb. Magnetic Lock



CX-MA1214-38*
3/8" Filler Plates For 1,200 lb. Magnetic Lock



CX-MA1214-58*
5/8" Filler Plates For 1,200 lb. Magnetic Lock



Spacer Plates

CX-MA0614-25*
1" Spacer Plate for 600 lb. Magnetic Lock



CX-MA1214-25*
1" Spacer Plate for 1,200 lb. Magnetic Lock



Armatures & Mounting Kits

CX-MA0612
Armature Housing For
600 lb. Magnetic Lock



CX-MA0611
Glass (*1/2" Thick*) Mounting Kit
For 600 lb. Magnetic Lock



CX-MA1212
Armature Housing For
1,200 lb. Magnetic Lock



CX-MA1211
Glass (*1/2" Thick*) Mounting Kit
For 1,200 lb. Magnetic Lock



CX-MA1215-95
Split Armature For 1,200 lb.
Magnetic Lock 3/8"



CX-MA1215-16
Split Armature For 1,200 lb.
Magnetic Lock 5/8"



*Add 'D' to model number for Double Door version

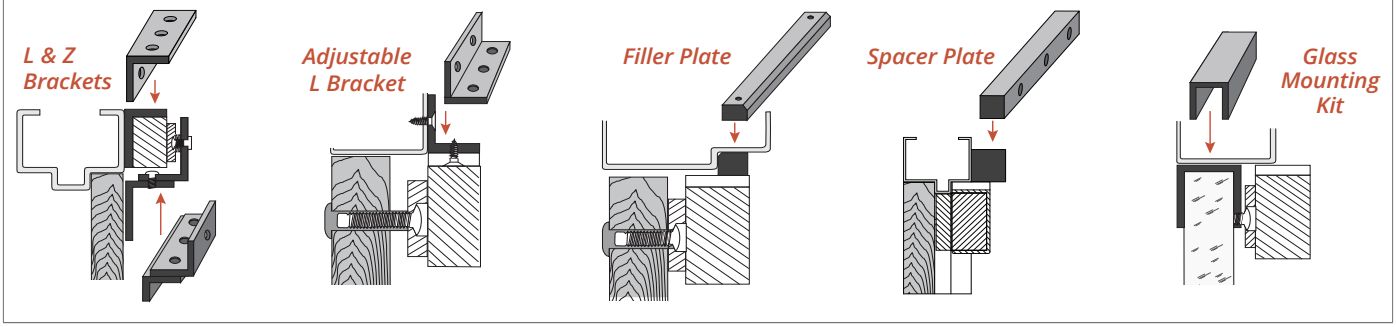

CAMDEN DOOR CONTROLS Opening New Doors to Innovation, Quality, and Support!

2395 Skymark Ave, Mississauga, ON Canada L4W 4Y6 • Toll Free: 1(877) 226-3369 (CAMDEN9)
Tel: (905) 366-3377 | Fax: (905) 366-3378 | E-mail: info@camdencontrols.com | www.camdencontrols.com

BSI FS 541752 Certified ISO 9001: 2015

Part #: MKTG-LIT-SP-MAGACC_R2