CX-ED0010
Electromechanical Cabinet Lock





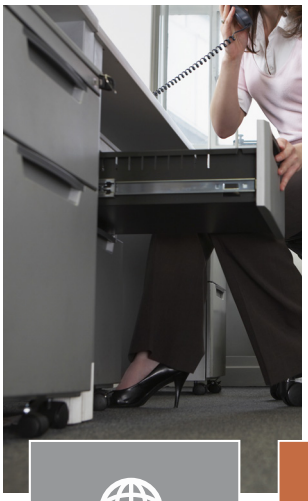



ADVANCED TECHNOLOGY

RUGGED CONSTRUCTION

Camden's CX-ED0010 Electromechanical Cabinet Lock represents an evolution in secure locking systems, designed for a broad range of enclosures that use swinging doors, drawers, and sliding doors. This lock supports both 12V and 24V power supplies and introduces the flexibility of operating in either field selectable fail-safe or fail-secure modes.

The CX-ED0010 accommodates diverse security needs in places such as computer cabinets, lockers, retail display counters, and medical and cannabis dispensaries. Its inclusion of door and lock status sensors further enhances its functionality, providing real-time security status.

Features

- Front mounting for use with office drawers, display cabinets, etc.
- Field Selectable fail-safe or fail-secure operation
- Strike plate adjusts to door alignment
- 440 lbs. (200 kg) holding force
- Door and lock status sensors

SPECIFICATIONS

POWER INPUT:	12 / 24 VDC
CURRENT DRAW:	280mA @ 12VDC, 140mA @ 24VDC
DOOR STATUS SENSOR:	200mA @ 30VDC (Max) Form 'C'
LOCK STATUS SENSOR:	1A @ 30V DC (Max)
ENDURANCE:	250,000 Cycles
STATIC STRENGTH:	440 lbs. (200 kg) Holding Force
TEMPERATURE RATING:	-4°F to 140°F (-20°C to 60°C)
OPERATION MODE:	Field Selectable Fail-Safe or Fail-Secure
INSTALLATION OPTIONS:	Front Mount

DIMENSIONS:

LOCK BODY: 3-5/16"H x 1-3/16"W x 1-1/8"D (84mm x 30mm x 28mm)

STRIKE PLATE: 2-1/2"H x 27/32"W x 1-1/4"D (64mm x 21.5mm x 31.6mm)

ORDERING INFORMATION

MODELS

CX-ED0010	Electromechanical Cabinet Lock

DIMENSIONS

LOCK BODY

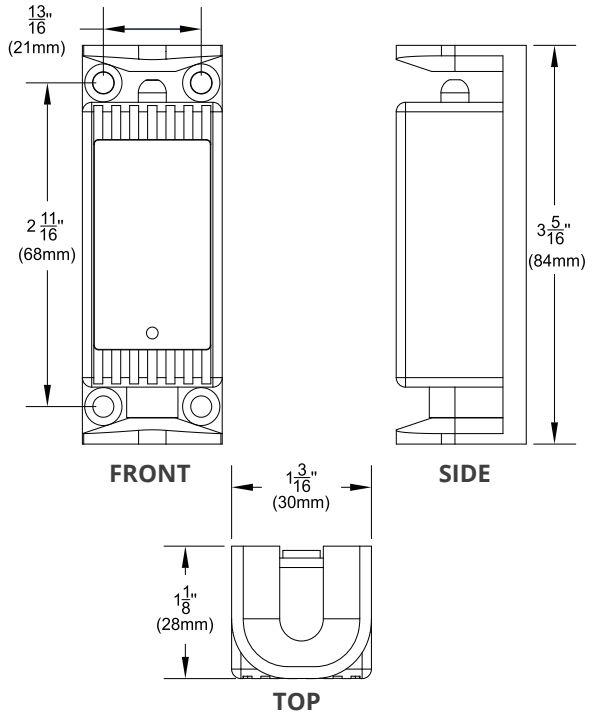

STRIKE PLATE

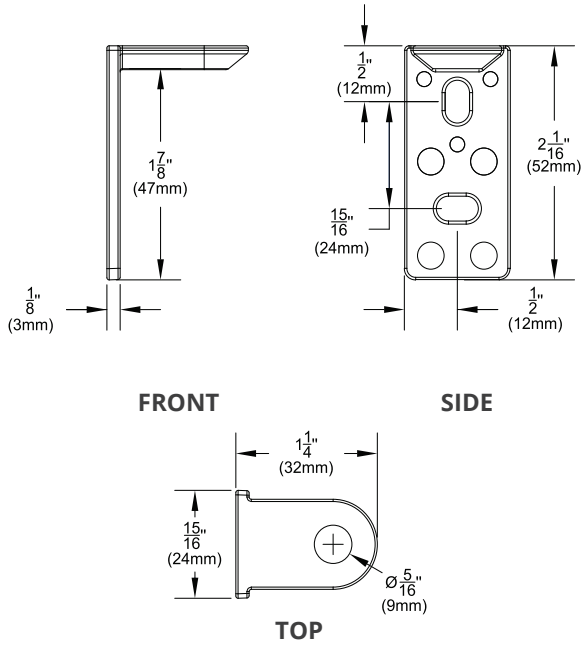

APPLICATION DIAGRAM

