Drop Plates

28499

4010, 4510

Templates

4010 PULL SIDE (DOOR MOUNT) DROP PLATE

PERMITS 140° MAXIMUM OPENING

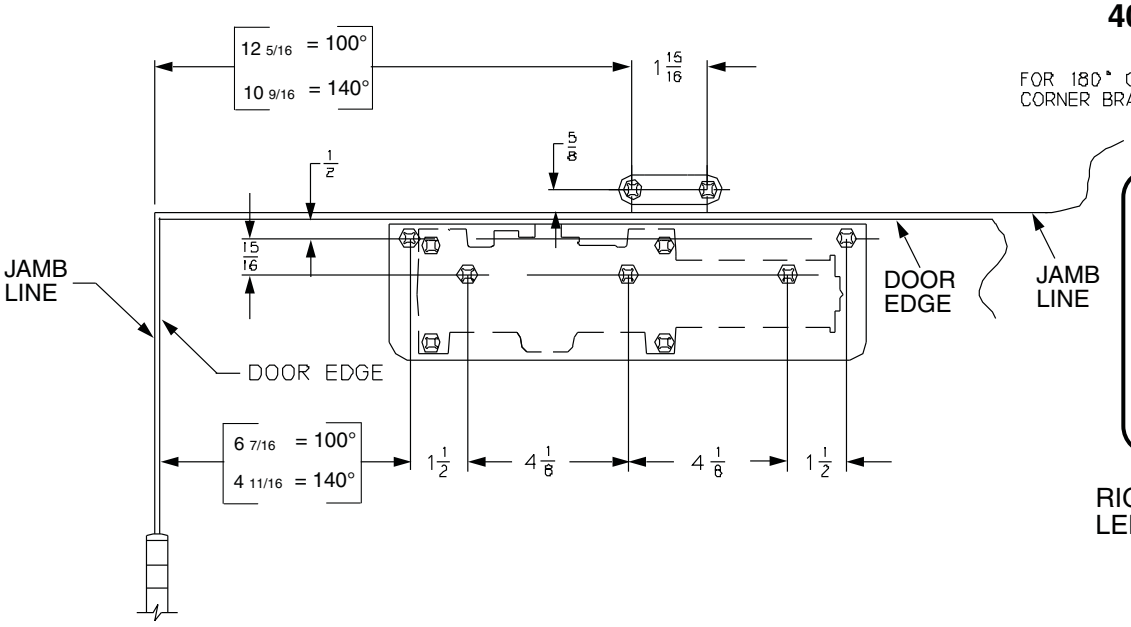

FOR 180° OPENING, MOUNT CLOSER ON No. 11 CORNER BRACKET SEE TEMPLATE 4010-CB.

PULL SIDE MOUNT ON: 4010-18 DROP PLATE

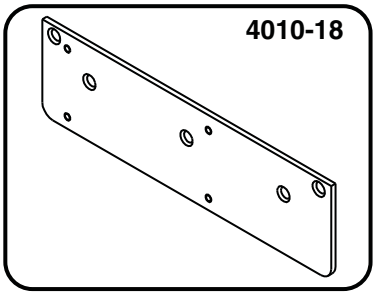

RIGHTHAND DOOR SHOWN, LEFT HAND DOOR OPPOSITE

4010 TRACK PULL SIDE DROP PLATE

PERMITS 180° MAXIMUM OPENING

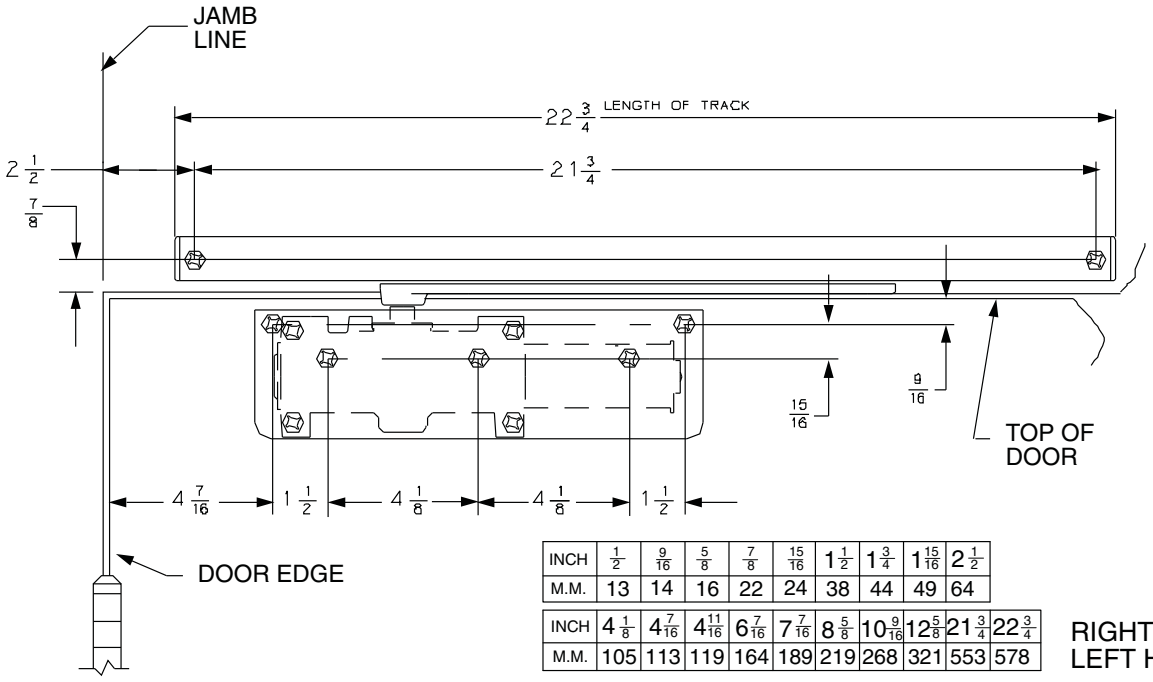

PULL SIDE MOUNT ON: 4010-18 DROP PLATE

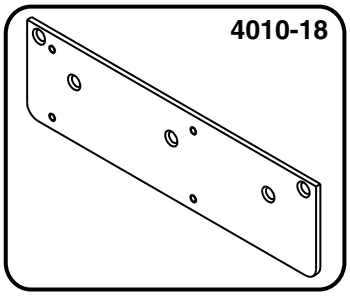

INCH	1/2	9/16	5/8	7/8	15/16	1 1/2	1 3/4	1 15/16	2 1/2
M.M.	13	14	16	22	24	38	44	49	64

INCH	4 1/8	4 7/16	4 11/16	6 7/16	7 7/16	8 5/8	10 9/16	12 5/8	21 3/4	22 3/4
M.M.	105	113	119	164	189	219	268	321	553	578

RIGHTHAND DOOR SHOWN, LEFT HAND DOOR OPPOSITE

4510 PULL SIDE (DOOR MOUNT) DROP PLATE

PERMITS 140° MAXIMUM OPENING

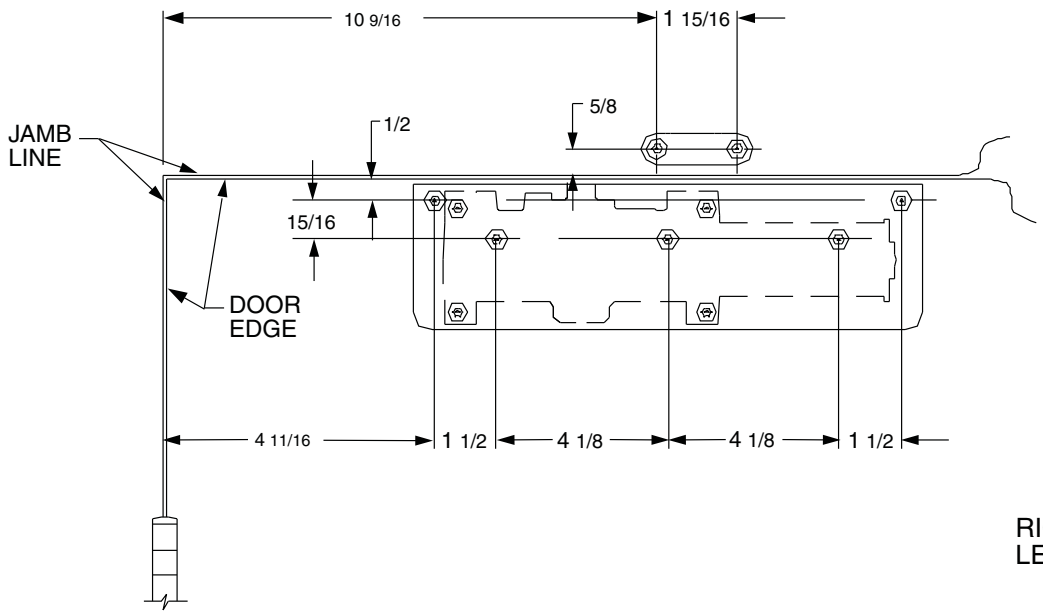

PUSH SIDE MOUNT ON: 4010-18 DROP PLATE

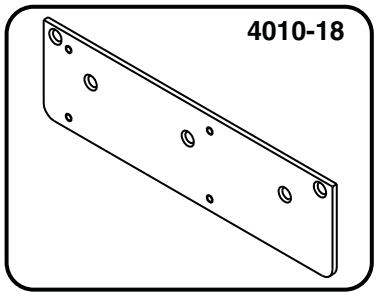

RIGHTHAND DOOR SHOWN,
LEFT HAND DOOR OPPOSITE

4510 TRACK PULL SIDE DROP PLATE

PERMITS 180° MAXIMUM OPENING

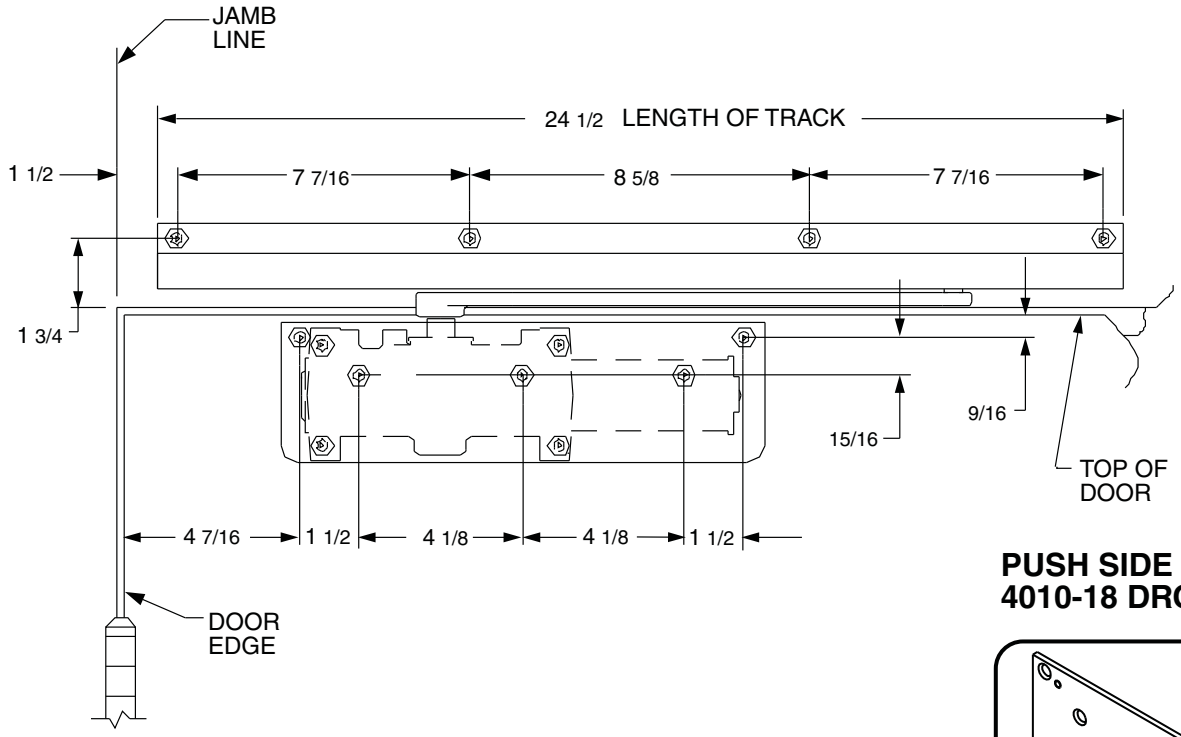

PUSH SIDE MOUNT ON: 4010-18 DROP PLATE

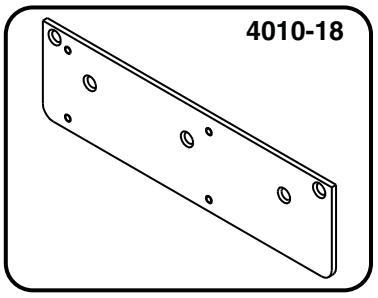

INCH	1/2	9/16	5/8	7/8	15/16	1 1/2	1 3/4	1 15/16	2 1/2
M.M.	13	14	16	22	24	38	44	49	64

INCH	4 1/8	4 7/16	4 11/16	6 7/16	7 7/16	8 5/8	10 9/16	12 5/8	21 3/4	22 3/4
M.M.	105	113	119	164	189	219	268	321	553	578

RIGHTHAND DOOR SHOWN,
LEFT HAND DOOR OPPOSITE

Customer Service

1-877-671-7011 www.allegion.com/us

ALLEGION

© Allegion 2015
Printed in U.S.A.
28499 Rev. 06/15-e