18782

3130-SEL Sentronic

LCN®

Installation Instructions

ⓘ **NOTE: Not for installation on Ul rated 20 minute wood core doors per can/ulc-s104-10**

Instructions

1a Closer is handed at factory and must match hand of door. hand of closer shown on mounting channel. Voltage shown on SENTRONIC cover plate must match voltage supplied to door frame.

1b If door & frame are not prepared for closer & track then prepare in accordance with details on opposite side.

1c Remove cover plate from track. Assemble flexible conduit connector to tapped hole provided in top of track. Connect power supply wires to track terminal strip. See wiring diagram below. Insert track roller into track. Make sure roller stud is inserted into hole in track slide. Insert track into frame and secure with proper screws as shown on opposite side. Replace cover plate.

1d Insert closer in cut out in door & secure with proper screws.

1e Place arm on closer shaft and secure with shaft screw.

1f Loosen set screw in end of arm, open door part way (about 30°), pull arm away from top of door and connect to track roller. Tighten set screw firmly. Open door to hold open position.

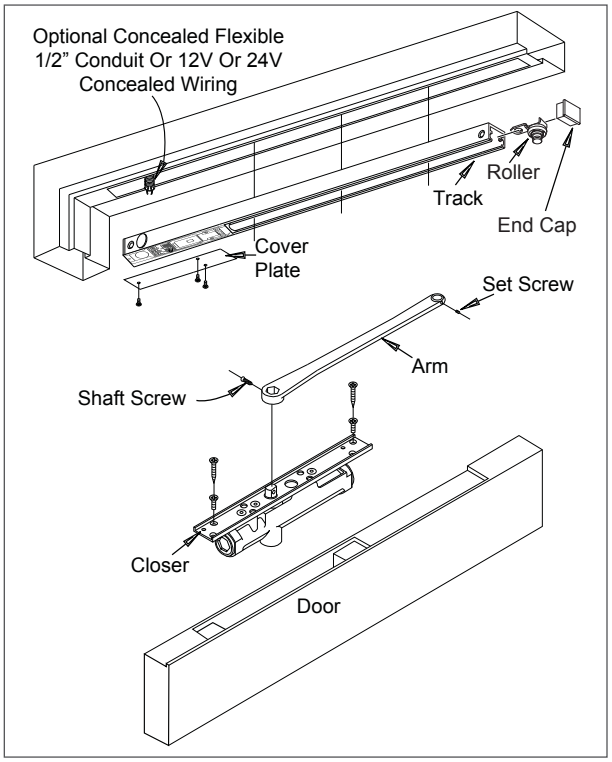

Regulation

ⓘ **Important**
Do not allow door to slam into frame. A "normal" closing time from 90° open position is 5 to 7 seconds, evenly divided between main swing speed and latch swing speed. Use socket screw key furnished. To slow **MAIN SPEED** of door, turn regulating screw (nearest arm) clockwise. To slow **LATCH SPEED** of door, turn regulating screw (nearest hinge) clockwise.

Backcheck

To increase **BACKCHECK**, turn regulating screw (nearest latch) clockwise. Use lightest **BACKCHECK** that will retard door opening sufficiently.
DO NOT ABRUPT BACKCHECK NOR EXPECT DOOR CLOSER TO ACT AS A STOP

⚠ CAUTION ⚠

Improperly installed or regulated closers can cause property damage or personal injury. Please follow these instructions carefully.

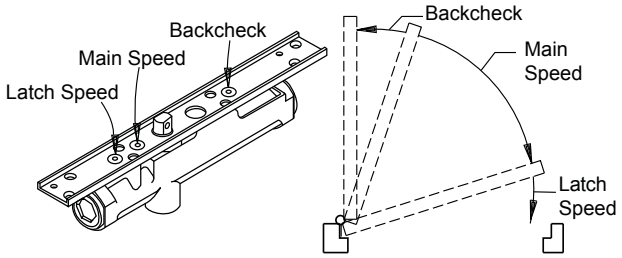

Electrical Checkout

1. With power on, open door fully. Door should remain in open position. If door does not stay open check electrical input.
2. Turn power off. Door should close immediately. Turn power on and leave door in the open position.
3. System should be checked at frequent intervals. It is suggested that steps 1 & 2 be repeated every 90 days.

ⓘ **Note: If door does not close when power is off, consult LCN Representative or factory.**

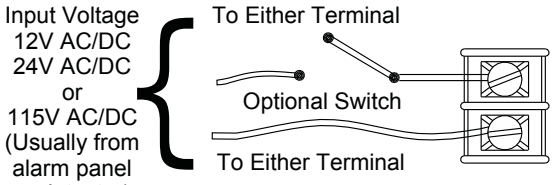

Polarity Not Important

Conduit Quick Connector

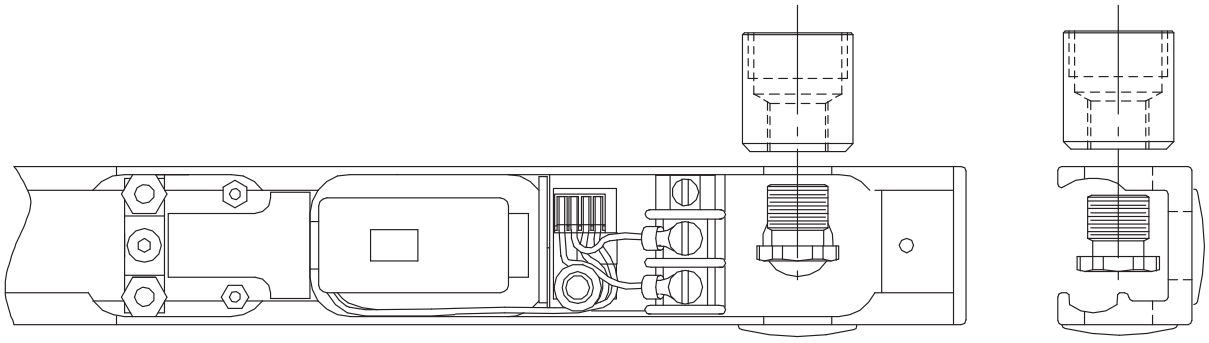

Fig. 1

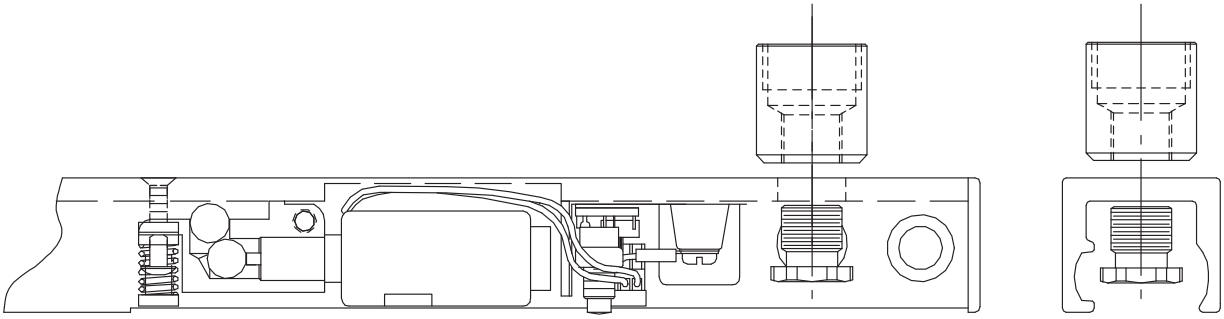

Fig. 2

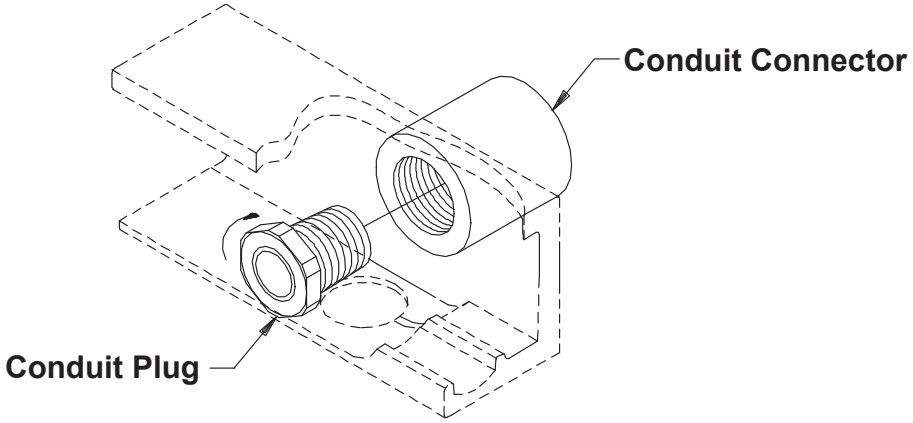

Fig. 3

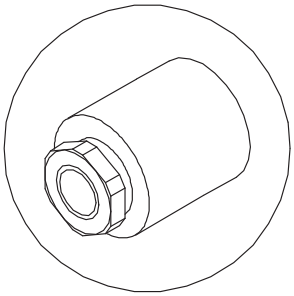

Conduit Plug shown in Conduit Connector

Installation Instructions

1a	The Conduit Quick Connector and Plug can be found in the closer screwpack.
1b	The Conduit Quick Connector should be fastened to the 1/2” concealed conduit prior to step 3 on the closer installation instructions.
1c	During step 3 on the closer installation instructions, make sure that the Conduit Connector is secured flush against the track surface. See option in Fig. 1 below that matches the mounting option selected for track surface. With the track mounted, take the Conduit Plug and slide it through the 1/2” hole in the track. (see Fig.2) Tighten the Plug into the Conduit Connector using a 5/8” wrench, until completely secure, as shown in Fig.3.

Customer Service
1-877-671-7011 www.allegion.com/us

THIS TEMPLATE APPLIES TO

3133-SE
3134-SE } 85° to 110° HOLD OPEN

MINIMUM DOOR WIDTH 2' 6"
SE-L MEANS EXTRA LONG
ARM AND TRACK

DOOR HOLDER SOLENOID
12 VAC - DC Nominal + 10% - 15% @ .180 Amp. Max.
24 VAC - DC Nominal + 10% - 15% @ .090 Amp. Max.
120 VAC - DC Nominal + 10% - 15% @ .030 Amp. Max.

Sentronic®

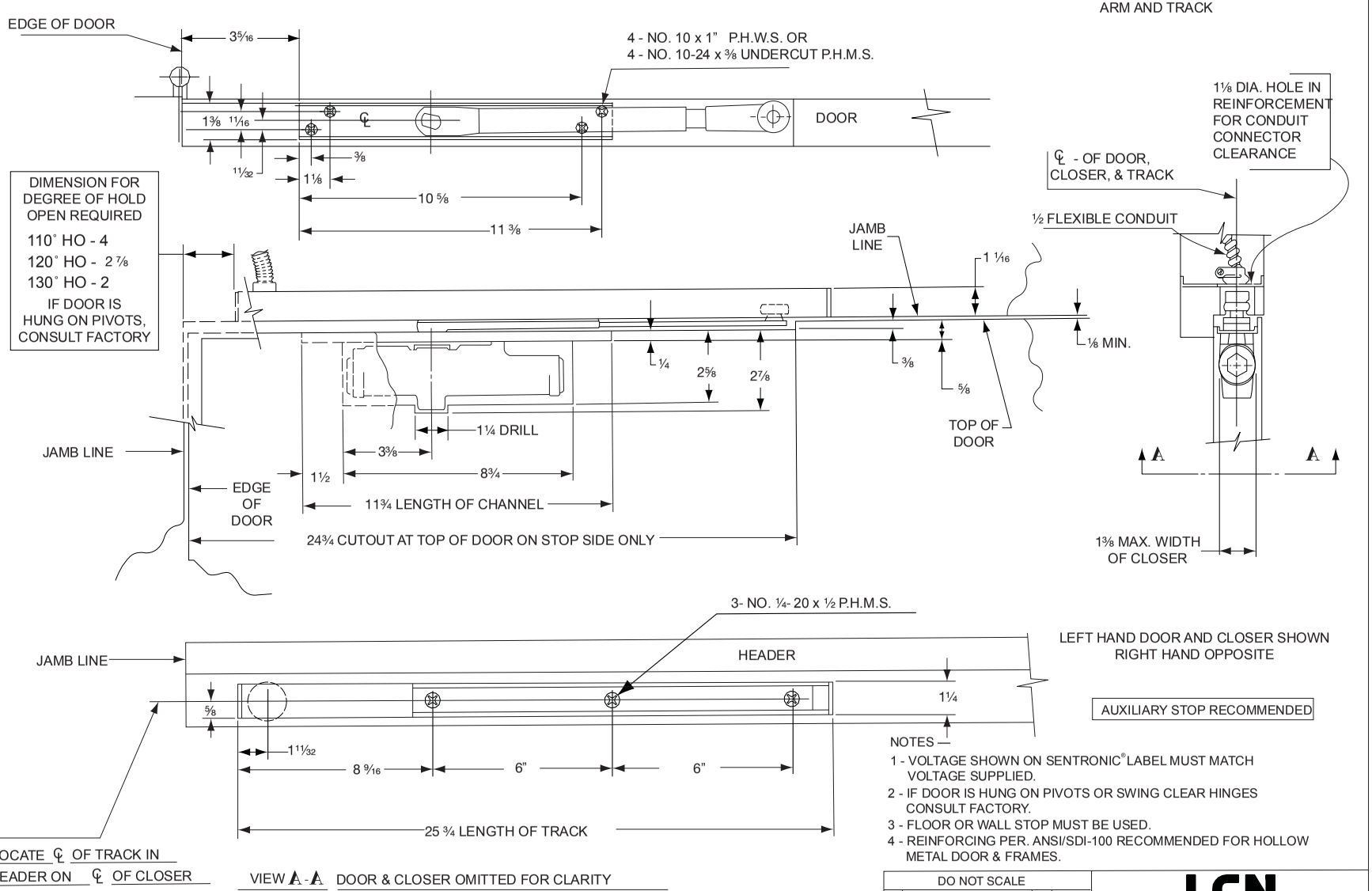

LEFT HAND DOOR AND CLOSER SHOWN
RIGHT HAND OPPOSITE

AUXILIARY STOP RECOMMENDED

NOTES —
1 - VOLTAGE SHOWN ON SENTRONIC® LABEL MUST MATCH VOLTAGE SUPPLIED.
2 - IF DOOR IS HUNG ON PIVOTS OR SWING CLEAR HINGES CONSULT FACTORY.
3 - FLOOR OR WALL STOP MUST BE USED.
4 - REINFORCING PER. ANSI/SDI-100 RECOMMENDED FOR HOLLOW METAL DOOR & FRAMES.

INCH	1/8	1/4	11/32	3/8	1/2	5/8	11/18	3/4	1	1 1/16	1 1/8	1 5/32	1 1/4	1 3/8	1 1/2	2 5/8	2 7/8	3 9/18	3 3/8	3 1/2	3 7/8	7 7/8	8 3/4	10 5/8	11 3/8	11 3/4	24	22 3/4
M.M.	3.2	6.4	8.7	9.5	12.7	15.9	17.4	19.1	25.4	27.0	28.6	29.4	31.8	34.9	38.1	66.7	73.0	84.1	85.7	88.9	98.4	200	222.3	269.9	288.9	298.4	609.6	577.9

DO NOT SCALE			
NO	REVISION	BY	DATE
7	Revised Template Replaces 2/13/73 & Track Mounting Holes Relocated	DRM	6/19/90

LCN®
3130 SE FULLY CONCEALED
DOOR CLOSER/HOLDER
WITH ELECTRONIC RELEASE

By 6-19-90 RJS
APPR 6-19-90 CZ
DO NOT SCALE
3130 SEL

PRINCETON, ILLINOIS

© Allegion 2017
Printed in U.S.A.
18782 Rev. 08/17-f