18758

2030 Series

LCN®

No maintenance required. 2035 EN 4

Installation Instructions



1 Installation

1a The hand of the door and the closer must be the same. RH or LH will be stamped on the mounting plate. See the proper template for your application.

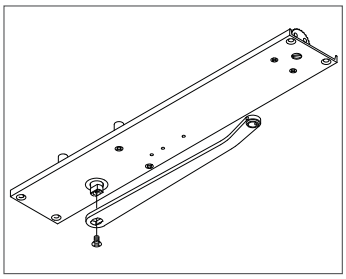

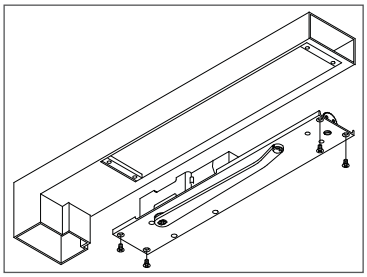

1b Attach the arm to the closer. The bend in the arm will always point towards the door.

1c Install the closer including the arm in the prepped frame with mounting screws provided. Be sure the mounting plate is flush with the soffit.

1d After the closer is mounted in the door jamb, attach the applied stop to the head frame, as shown below. The stop section must have an access hole to allow for door closer adjustment.

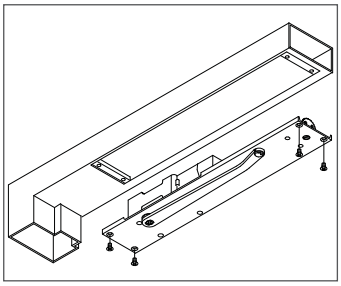

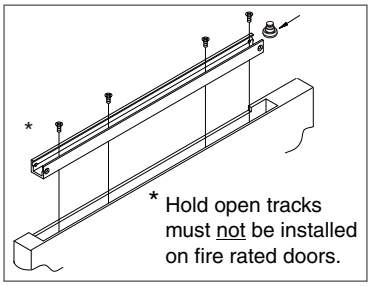

1e The track mortise in the top of the door must match the proper template. Place the roller in the track. Mount the track in the door. Fasten with the provided screws.

1f Open the door approximately 45°. Pull the arm over the top of the door. Align the hole in the end of the arm with the roller stud. Fit the closer arm completely onto the roller stud and tighten the arm set screw securely.

1g Adjust the closing power only if more power is needed. The closer is shipped with minimum closing power preset. To increase the closing power turn the spring adjusting screw clockwise. Maximum adjustment is 36 turns.

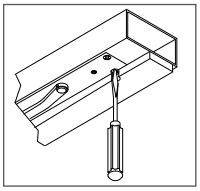

Customer Service
1-877-671-7011 www.allegion.com/us

2 Adjustment

The 2030 Series closer has been regulated prior to shipment. If adjustments are necessary, carefully follow instructions **DO NOT REMOVE THE COVER PLATE TO MAKE ADJUSTMENTS.**

2a **Closing Speed:** See Closer Control Diagram below. Regulating screw locations are shown in illustration at left and also on door closer label. To adjust Main Speed, turn regulating screw clockwise to decrease or counter-clockwise to increase. To adjust Latch Speed, turn regulating screw clockwise to decrease or counter-clockwise to increase.

2b **Backcheck:** This control hydraulically dampens the opening speed of doors. Use enough backcheck to sufficiently slow the doors opening speed. To increase resistance, turn regulating screw clockwise.

ⓘ **NOTE: DO NOT USE AN ABRUPT BACKCHECK OR EXPECT THE DOOR CLOSER TO ACT AS A DOOR STOP!**

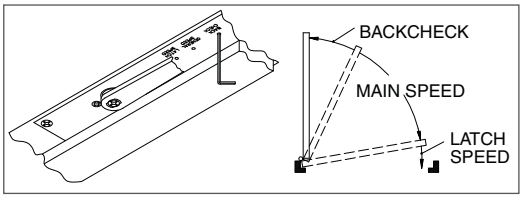

3 Hold-Open Information

HOLD-OPEN OPTION

LIGHT HOLD-OPEN FORCE

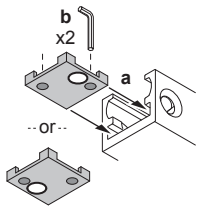

STRONG HOLD-OPEN FORCE

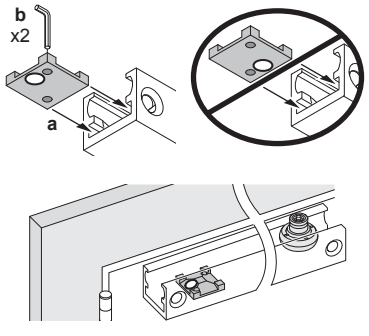

⚠ CAUTION ⚠

Improper installation or regulation may result in personal injury or property damage. Follow all instructions carefully. For questions, call LCN at 877-671-7011.

ALLEGION

© Allegion 2016
Printed in U.S.A.
18758 Rev. 06/16-m

2031
2033
2034
2035
NON HOLD OPEN (90°-180°)
H 90 (85°-110°)
MAX. OPENING 180°

AUXILIARY STOP RECOMMENDED

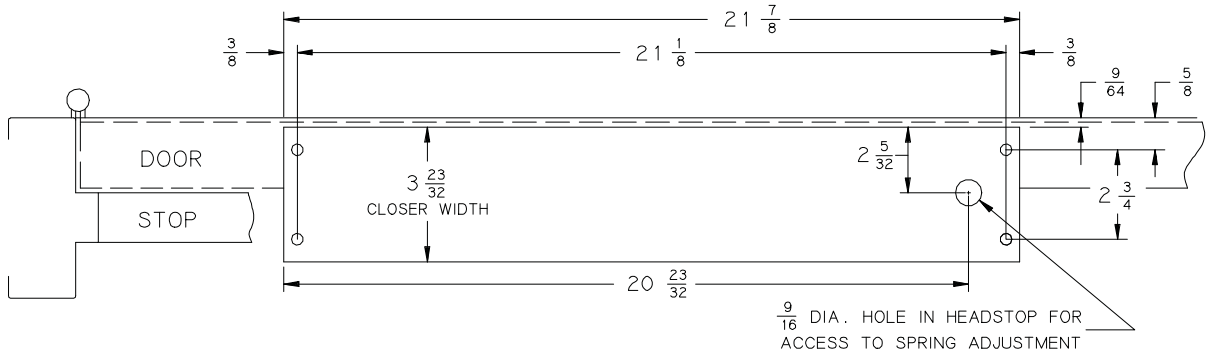

AN ALUMINUM COMBINATION MOUNTING AND FINISH PLATE IS INCLUDED AS PART OF THE CLOSER. AN APPLIED REMOVABLE HEADSTOP MUST BE USED AND MOUNTED BETWEEN SIDE STOPS FOR REMOVABILITY. MOUNTING SCREW HOLES FOR REMOVABLE HEADSTOP MUST SPAN CLOSER MOUNTING/FINISH PLATE

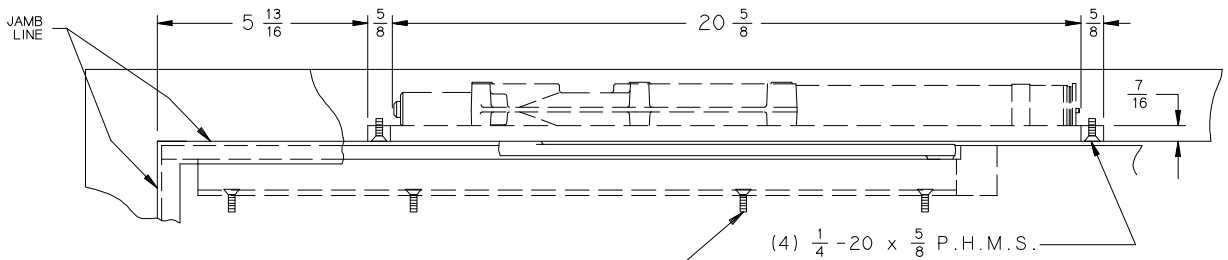

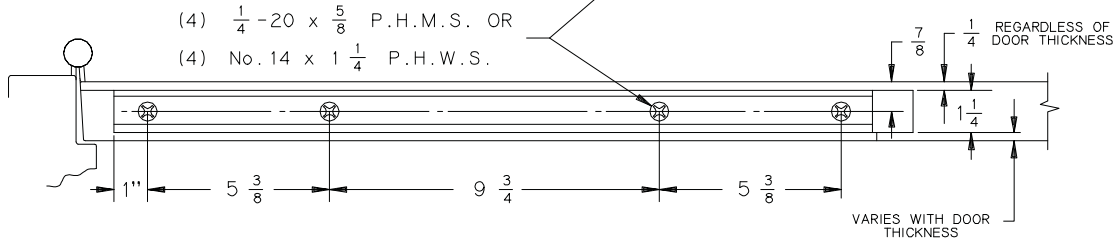

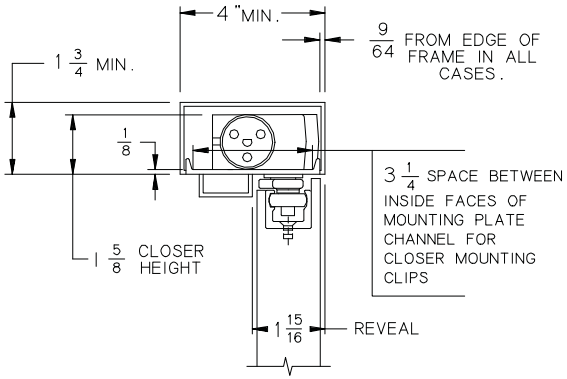

NOTES-

1. FOR 180° OPENINGS, MAX. ALLOWABLE BUTT SIZE IS 5" x 5".
2. MINIMUM STOP THICKNESS 1/2".
3. 1/8" DOOR TO SOFFIT CLEARANCE REQUIRED.
4. REINFORCING PER ANSI/SDI-100 RECOMMENDED FOR HOLLOW METAL DOORS & FRAMES.

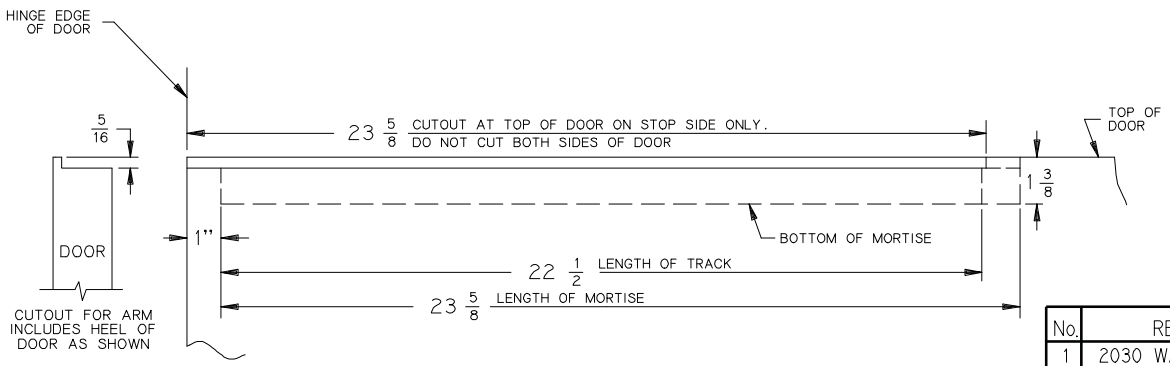

LEFT HAND DOOR AND CLOSER SHOWN, RIGHT HAND OPPOSITE

inch	1/8	9/64	1/4	5/16	3/8	7/16	1/2	9/16	5/8	7/8	1	1 1/4	1 3/8	1 5/8	1 3/4
mm	3	4	6	8	10	11	13	14	16	22	25	32	35	41	44

inch	1 15/16	2 5/32	2 3/4	3 1/4	3 23/32	4	5 3/8	5 13/16	9 3/4	20 5/8	20 23/32	21 1/8	21 7/8	22 1/2	23 5/8
mm	49	55	70	79	94	102	137	148	248	524	526	537	556	572	600

No.	REVISION	BY	DATE
1	2030 WAS 2030-101	RJS	3/78
2	CHANGED LOGO	RJS	7/80
3	CHANGE TO UNIV. TRACK	DRM	10/89
4	TRACK HOLES RELOCATED	DRM	6/90
5	CAD CONV./ADDED SIZE 1	CTB	1/94

DRW BY CTB 1/94
DO NOT SCALE

OVERHEAD CONCEALED CLOSER WITH CONCEALED ARM & TRACK

2030 INST.

2031 CP 2032 CP 2033 CP 2034 CP 2035 CP	NON HOLD OPEN (UP TO 120°) H-90 (80° TO 100°) MAX. OPENING 120°
AUXILIARY STOP RECOMMENDED	
LEFT HAND DOOR AND CLOSER SHOWN, RIGHT HAND OPPOSITE	6/96

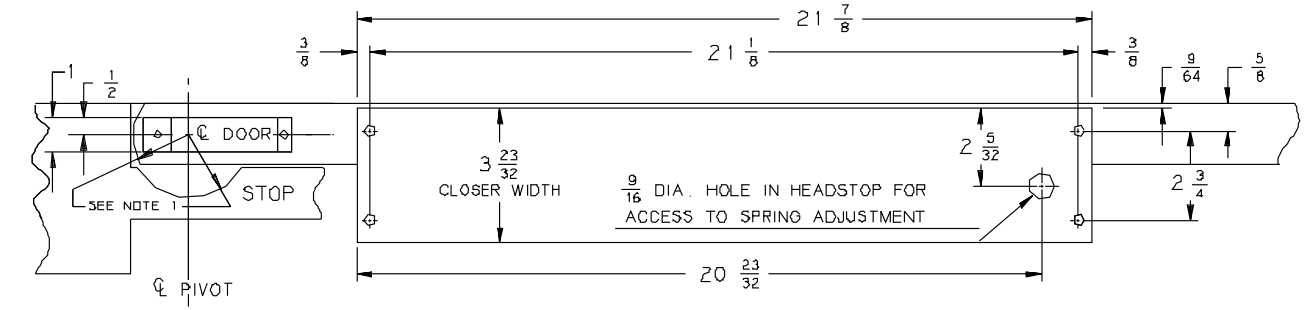

PLAN & ELEVATION OF OVERHEAD FRAME SHOWING PREPARATION FOR CLOSER

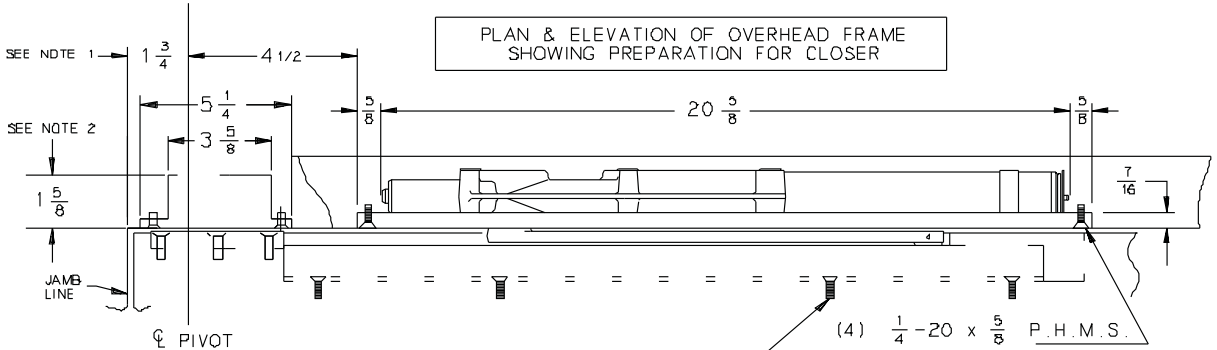

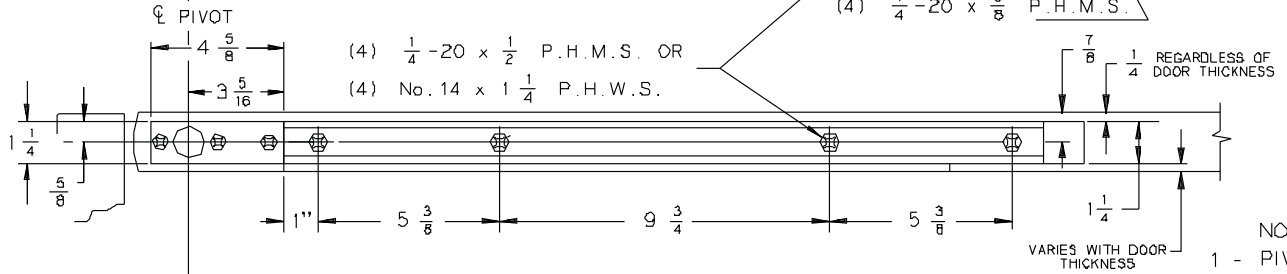

PLAN & ELEVATION OF TOP OF DOOR SHOWING PREPARATION FOR CLOSER TRACK

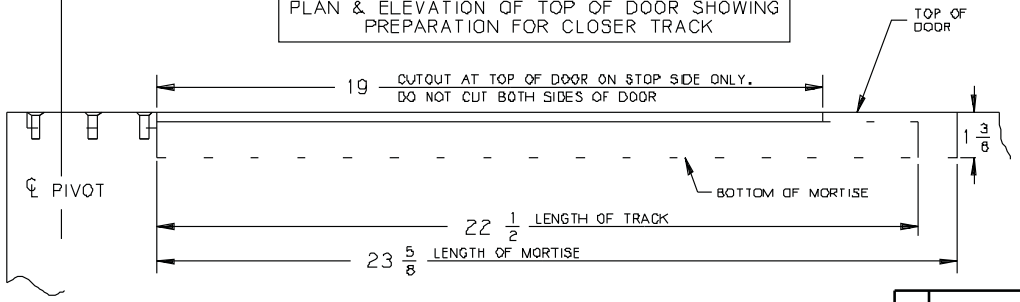

AN ALUMINUM COMBINATION MOUNTING AND FINISH PLATE IS INCLUDED AS PART OF THE CLOSER. AN APPLIED REMOVABLE HEADSTOP MUST BE USED AND MOUNTED BETWEEN SIDE STOPS FOR REMOVABILITY. MOUNTING SCREW HOLES FOR REMOVABLE HEADSTOP MUST SPAN CLOSER MOUNTING/FINISH PLATE

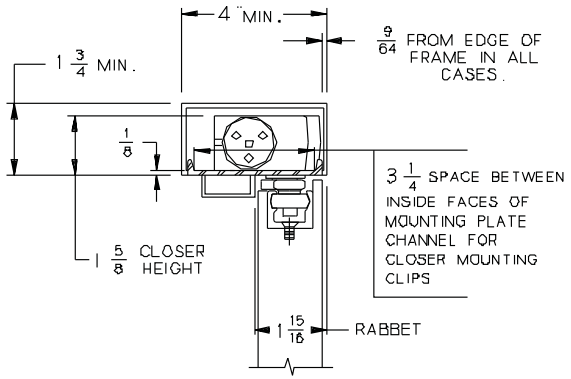

NOTES :

1 - PIVOT CENTER MAY BE VARIED AS DESIRED. MINIMUM ALLOWABLE IS 1 3/4". AS SHOWN. CUTOUT IN HEADSTOP & VERTICAL JAMB TO CLEAR HEEL OF DOOR. HEEL OF DOOR RADIUS MUST NOT EXCEED ℄ OF PIVOT TO JAMB DISTANCE

2 - FOR PIVOT INSTALLATION DETAILS, SEE 7250 SERIES PIVOT TEMPLATE.

3 - MINIMUM STOP THICKNESS 1/2".

4 - 1/8" DOOR TO SOFFIT CLEARANCE REQUIRED.

5 - REINFORCING PER ANSI/SDI-100 RECOMMENDED FOR HOLLOW METAL DOOR AND FRAMES.

inch	1/8	9/64	1/4	5/16	3/8	7/16	1/2	9/16	5/8	7/8	1	1 1/4	1 3/8	1 5/8	1 3/4	1 15/16	2 5/32
mm	3	4	6	8	10	11	13	14	16	22	25	32	35	41	44	49	55

inch	2 3/4	3 1/4	3 5/16	3 5/8	3 23/32	4	4 1/2	4 5/8	5 1/4	5 3/8	9 3/4	19	20 5/8	20 23/32	21 1/8	21 7/8	22 1/2
mm	70	79	84	92	94	102	114	117	133	137	248	483	524	526	537	556	572

inch	23 5/8
mm	600

No.	REVISION	BY	DATE
1	CAD CONVERSION	CTB	8/93
2	TEMPLATE UPDATE	JEJ	6/96
3	TEMPLATE UPDATE	AMM	2/98

APP BY JEJ 6/96

DO NOT SCALE

OVERHEAD CONCEALED CLOSER, ARM & TRACK WITH CENTER PIVOTS

2030-CP

2031 OP 2032 OP 2033 OP 2034 OP 2035 OP	NON HOLD OPEN (UP TO 115°) H-90 (85°) MAX. OPENING 115°
AUXILIARY STOP RECOMMENDED	
LEFT HAND DOOR AND CLOSER SHOWN, RIGHT HAND OPPOSITE	6/96

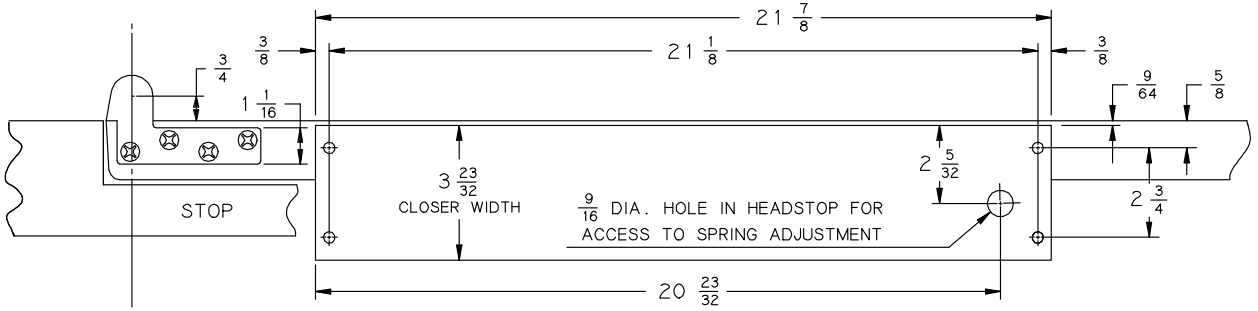

AN ALUMINUM COMBINATION MOUNTING AND FINISH PLATE IS INCLUDED AS PART OF THE CLOSER. AN APPLIED REMOVABLE HEADSTOP MUST BE USED AND MOUNTED BETWEEN SIDE STOPS FOR REMOVABILITY. MOUNTING SCREW HOLES FOR REMOVABLE HEADSTOP MUST SPAN CLOSER MOUNTING/FINISH PLATE

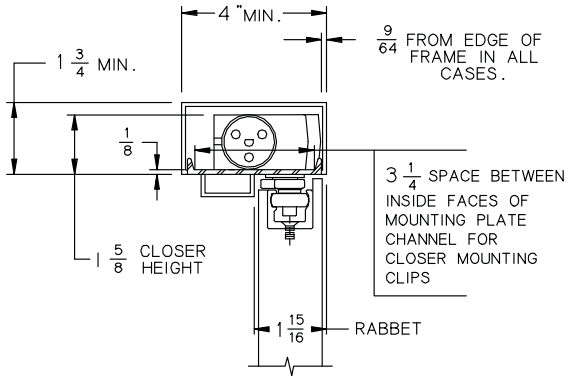

PLAN & ELEVATION OF OVERHEAD FRAME SHOWING PREPARATION FOR CLOSER

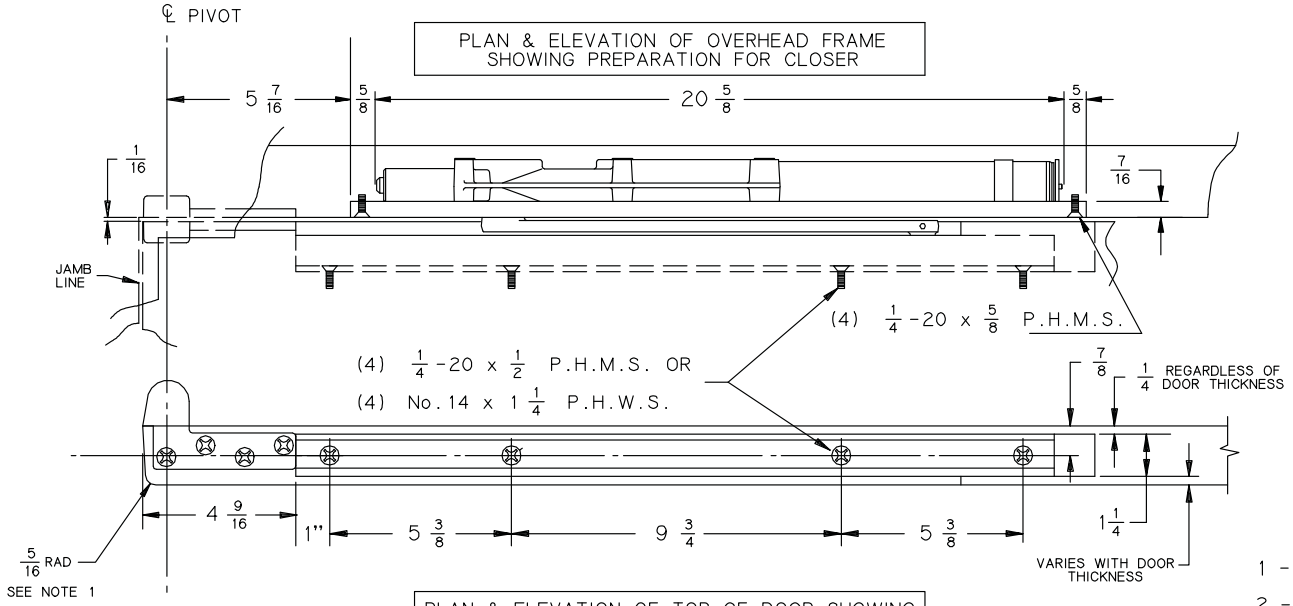

PLAN & ELEVATION OF TOP OF DOOR SHOWING PREPARATION FOR CLOSER TRACK

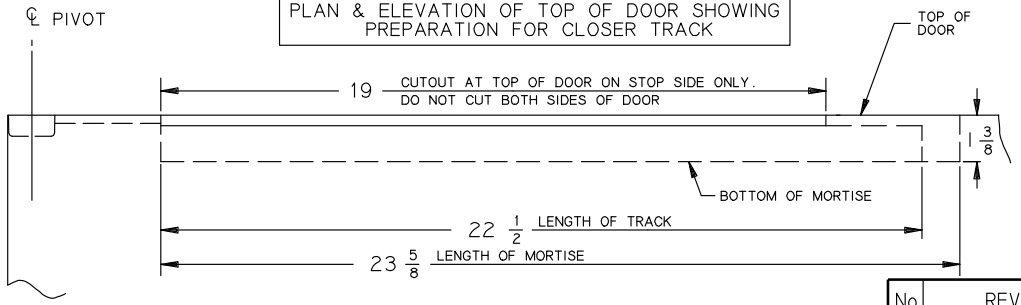

NOTES :

1 - BEVEL HEEL EDGE OF DOOR 1/8" IN 2".

2 - FOR PIVOT INSTALLATION DETAILS, SEE PIVOT TEMPLATE. FOR USE WITH PIVOT SETS: 7212, 7215, 7222, 7226 AND 7227.

3 - MINIMUM STOP THICKNESS 1/2".

4 - 1/8" DOOR TO STOP CLEARANCE REQUIRED.

5 - REINFORCING PER ANSI/SDI-100 RECOMMENDED FOR HOLLOW METAL DOOR AND FRAMES.

inch	1/16	1/8	9/64	1/4	5/16	3/8	7/16	1/2	9/16	5/8	3/4	7/8	1	1 1/16	1 1/4	1 3/8	1 5/8
mm	2	3	4	6	8	10	11	13	14	16	19	22	25	27	32	35	41

inch	1 3/4	1 15/16	2	2 5/32	2 3/4	3 1/4	3 23/32	4	4 9/16	5 3/8	5 7/16	9 3/4	19	20 5/8	20 23/32	21 1/8	21 7/8
mm	44	49	51	55	70	79	94	102	116	137	138	248	483	524	526	537	556

inch	22 1/2	23 5/8
mm	572	600

No.	REVISION	BY	DATE
1	CAD CONVERSION	CTB	8/93
2	TEMPLATE UPDATE	JEJ	6/96
3	TEMPLATE UPDATE	AMM	11/97
4	TEMPLATE UPDATE	AMM	09/06

APP BY JEJ 6/96

DO NOT SCALE

OVERHEAD CONCEALED CLOSER, ARM & TRACK WITH OFFSET PIVOTS

2030-OP