LCN®

Surface mounted closer

4110 Series



Overview

The 4110 is LCN's best performing heavy duty closer with an adjustable spring and possible hold-open point beyond 140 degrees, meeting ADA requirements. Backed by a 30 year warranty, the cast iron body and all weather fluid offer versatility in high traffic applications.

Cylinder

4111(6)-3071
Cast iron cylinder assembly

Handing
Handed

Sizing
Adjustable spring size 1-5, or sized 6
Includes patented Green Dial

- 4111 (adjustable from size 1 to 5)
- 4116 (Size 6; DEL, SHCUSH or HCUSH arm not available)

Available cylinder options

DEL	Delayed action cylinder
AVB	Advanced variable backcheck

Mounting

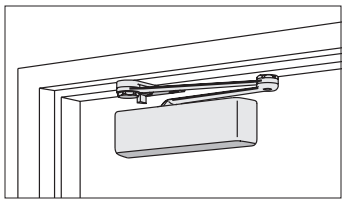

Parallel arm (push side)

ALLEGION™

Finishes

Powder coat finishes

689
Aluminum

690
Statuary Bronze

691
Light Bronze

693
Black

695
Dark Bronze

696
Brass

150+ additional custom colors available using the RAL numbering system

Metal plated finishes

632
Bright Brass

633
Satin Brass

639
Satin Bronze

616
Satin Bronze, Blackened

646
Satin Nickel

651
Bright Chrome

652
Satin Chrome

Available finish options

MTLPC	Brite metallic: Custom powder coat finish, which resembles that of 651 or 652 plated finish.
SRI	For installations where a higher level of protection against weather conditions, or the effects of a potentially corrosive atmosphere is required, LCN offers a special rust inhibiting (SRI) process. Ferrous metal components receive an SRI pretreatment and a standard powder coat finish of your choice, or a custom powder coat finish for a nominal additional cost. Closers treated with the SRI process exceed the 100 hour protection level available with standard LCN powder coated finishes.

Covers

Standard cover



4110-72
Plastic cover
- Non-handed
- Standard

Optional cover



4110-72MC
Metal cover
- Handed
- Required for plated finishes and custom powder coat finishes
- Optional

Arms



4110-3049EDA
Hold-open arm
- Handed
- Optional
- Provides hold-open function, adjustable at shoe



4110-3049FL
Fusible link arm
- Handed
- Releases hold-open function adjustable at shoe when exposed to temperatures above 165º F
- Optional
- NOTE: Check local codes before specifying FL arms. NOT A life safety product!



4110-3077CNS
Cush-N-Stop arm
- Non-handed
- Features solid forged steel main arm and forearm with built-in stop in soffit shoe



4110-3077EDA
Extra duty arm
- Non-handed
- Features forged, solid steel main and forearm for potentially abusive installations



4110-3077EDA/ 62G
Extra duty arm
- Non-handed
- Features forged, solid steel main and forearm for potentially abusive installations
- Optional 4110-62G thick hub shoe for blade stop clearance



4110-3049CNS
HCUSH arm
- Non-handed
- Provides hold-open function with templated stop/ hold-open points.
- Handle controls hold-open function



4110-3077SCNS
Spring CUSH arm
- Non-handed
- For abusive applications features solid forged steel main arm and forearm with spring loaded stop in the soffit shoe
- Optional



4110-3049SCNS
Spring HCUSH arm
- Non-handed
- For abusive applications features solid forged steel main arm and forearm with spring loaded stop in the soffit shoe
- Handle controls hold-open function
- Optional

Installation accessories



4110-18
Plate
- Required for push side mount where top rail is less than 5 1/8″ (130 mm), measured from the stop
- Requires minimum 2″ (51 mm) minimum top rail



4110-30
CUSH shoe support
- Provides anchorage for fifth screw used with CUSH arm, where reveal is less than 3 1/16″ (78 mm)



4110-61
Blade stop spacer
- Lowers parallel arm shoe to clear 1/2″ (13 mm) blade stop



4110-419
PA flush panel adapter
- Provides horizontal mounting surface for CUSH shoe on single rabetted or flush frame

Fasteners

Self-reaming and tapping screws included standard

Fastener pack options

TBSRT	TB[1] with self-reaming and tapping screws
WMS	Wood and machine screw
TBWMS	TB[1], wood and machine screw
TORX	TORX machine screw
TBTRX	TB[1] and TORX machine screw

1 Specify door thickness if other than 1 3/4"

Dimensions and mounting

Parallel arm (push side) mounting

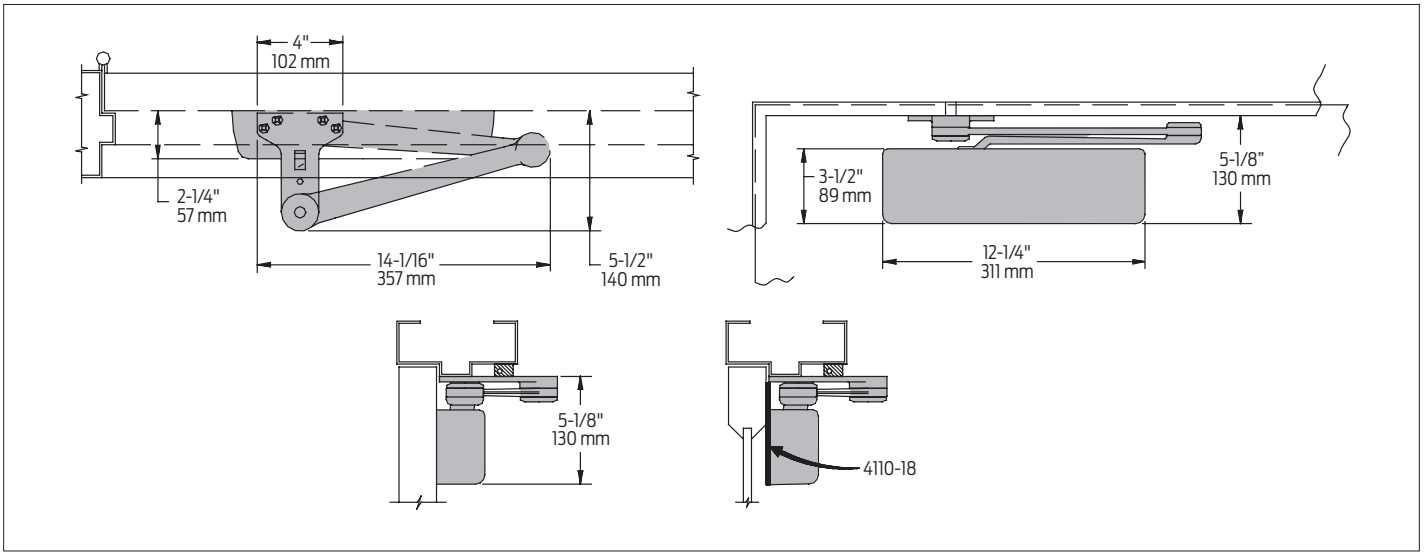

Specifications

Accessibility	Available with less than 5.0 lbs. opening force on 36" door
Certifications/ approvals	▪ Grade 1 - ANSI A156.4 ▪ UL 10C ▪ Meets BAA - Buy American Act
Degree of operation	EDA Max opening: 180° Hold open: 180° Cush Max opening: 110° Hold open: 110°
Environmental conditions	▪ Approved for interior use ▪ Approved for exterior use (SRI coated only) ▪ LCN's standard all weather fluid performs to temperature ranges from 120°F (49°C) to -30°F (-35°C) ▪ LCN's powder coat finish surpasses 100 hours of salt spray which is over four times the ANSI standard for corrosion resistance.
Warranty	30 years
Standard features	▪ Cast iron body ▪ Full complement bearing ▪ 1 1/2" diameter piston ▪ 11/16" diameter double heat treated pinion journal

© 2020 Allegion
013108, Rev. 1/2020
www.allegion.com/us

ALLEGION™