Drop Plates

28501

4110, 4110 Cush, 4210, 4210 Cush, 4110T, 4210T

Templates

4110 PUSH SIDE (DOOR MOUNT) DROP PLATE

PERMITS 180° MAXIMUM OPENING

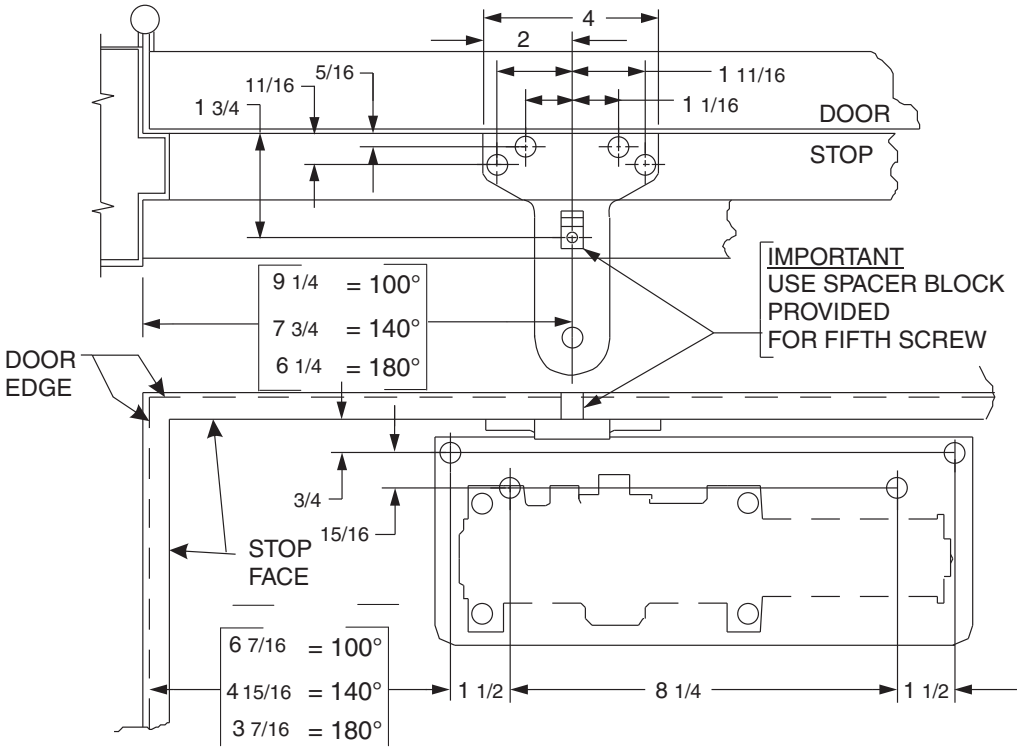

PUSH SIDE MOUNT ON: 4110-18 DROP PLATE

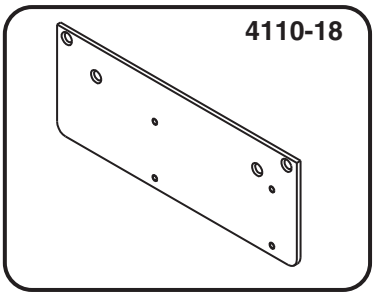

LEFT HAND DOOR SHOWN,
RIGHT HAND DOOR OPPOSITE

INCH	5/16	11/16	3/4	15/16	1 1/16	1 1/2	1 11/16	1 3/4	2
M.M.	8	17	19	24	27	38	43	44	51
INCH	2 3/8	3 3/16	3 7/16	4	4 15/16	6 1/16	6 1/4	6 7/16	6 15/16
M.M.	60	81	87	102	125	154	159	164	176
INCH	7 3/4	8 3/16	8 1/4	8 13/16	8 7/8	9 1/4	9 3/4	11	11 5/8
M.M.	197	208	210	224	225	235	248	279	295

4110 CUSH PUSH SIDE (DOOR MOUNT) DROP PLATE

PERMITS 110° MAXIMUM OPENING

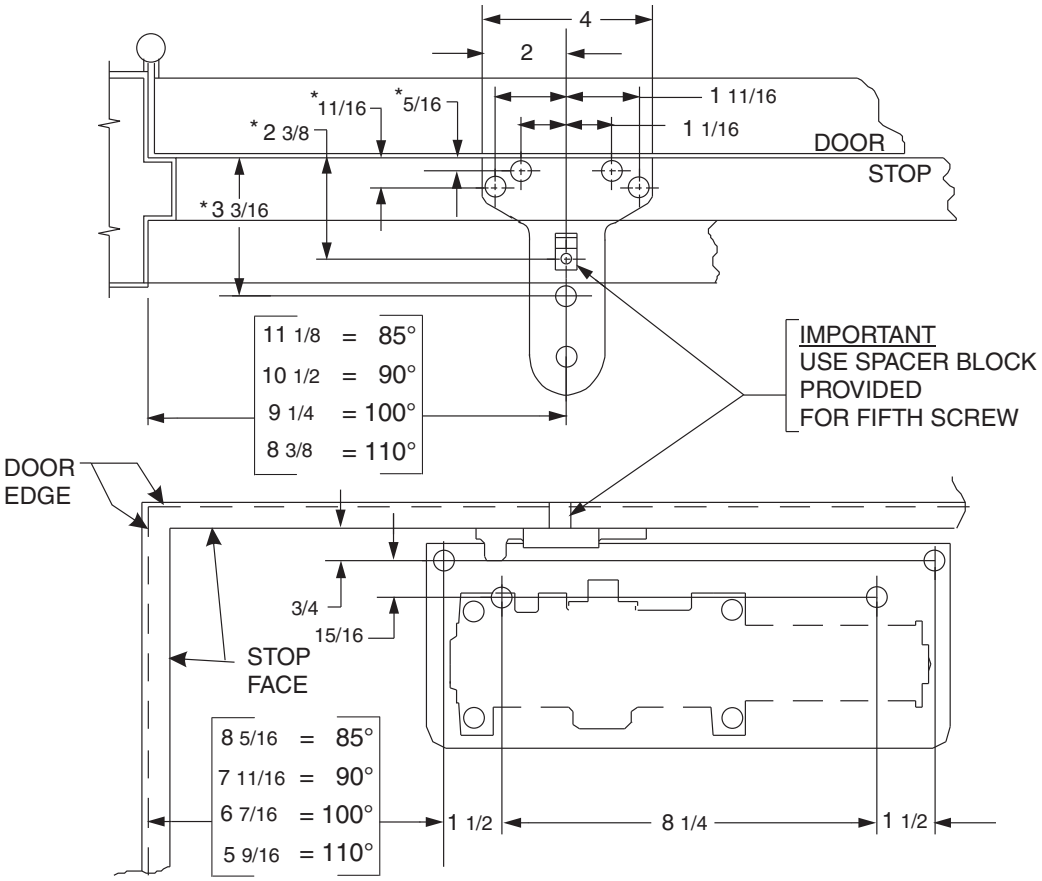

PUSH SIDE MOUNT ON: 4110-18 DROP PLATE

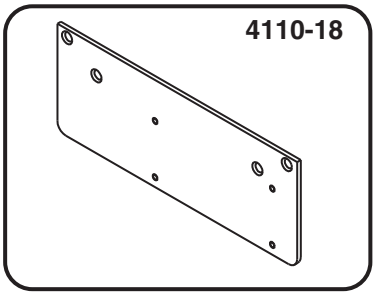

LEFT HAND DOOR SHOWN,
RIGHT HAND DOOR OPPOSITE

NOTE:
* INCREASE THESE DIMENSIONS 1/4" WHEN SPRING CUSH OPTION IS USED.

4210 PUSH SIDE (DOOR MOUNT) DROP PLATE — PERMITS 180° MAXIMUM OPENING

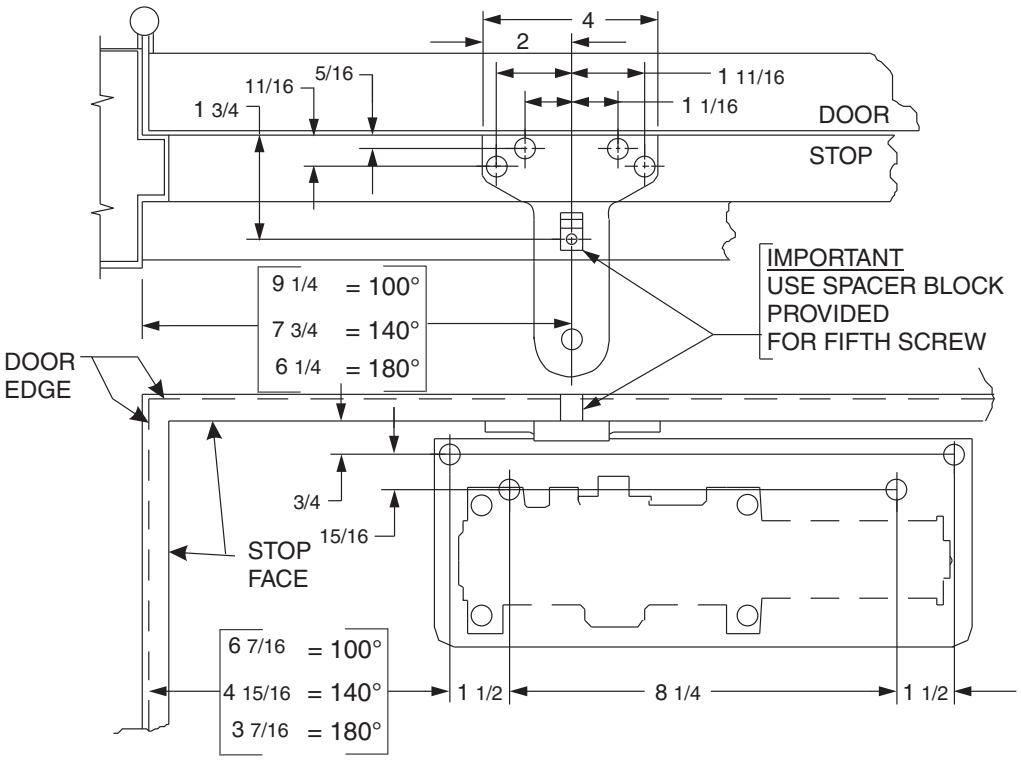

PUSH SIDE MOUNT ON: 4110-18 DROP PLATE

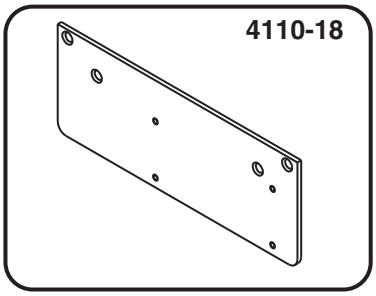

LEFT HAND DOOR SHOWN,
RIGHT HAND DOOR OPPOSITE

INCH	5/16	11/16	3/4	15/16	1 1/16	1 1/2	1 11/16	1 3/4	2
M.M.	8	17	19	24	27	38	43	44	51

INCH	2 3/8	3 3/16	3 7/16	4	4 15/16	6 1/16	6 1/4	6 7/16	6 15/16
M.M.	60	81	87	102	125	154	159	164	176

INCH	7 3/4	8 3/16	8 1/4	8 13/16	8 7/8	9 1/4	9 3/4	11	11 5/8
M.M.	197	208	210	224	225	235	248	279	295

4210 CUSH PUSH SIDE (DOOR MOUNT) DROP PLATE — PERMITS 110° MAXIMUM OPENING

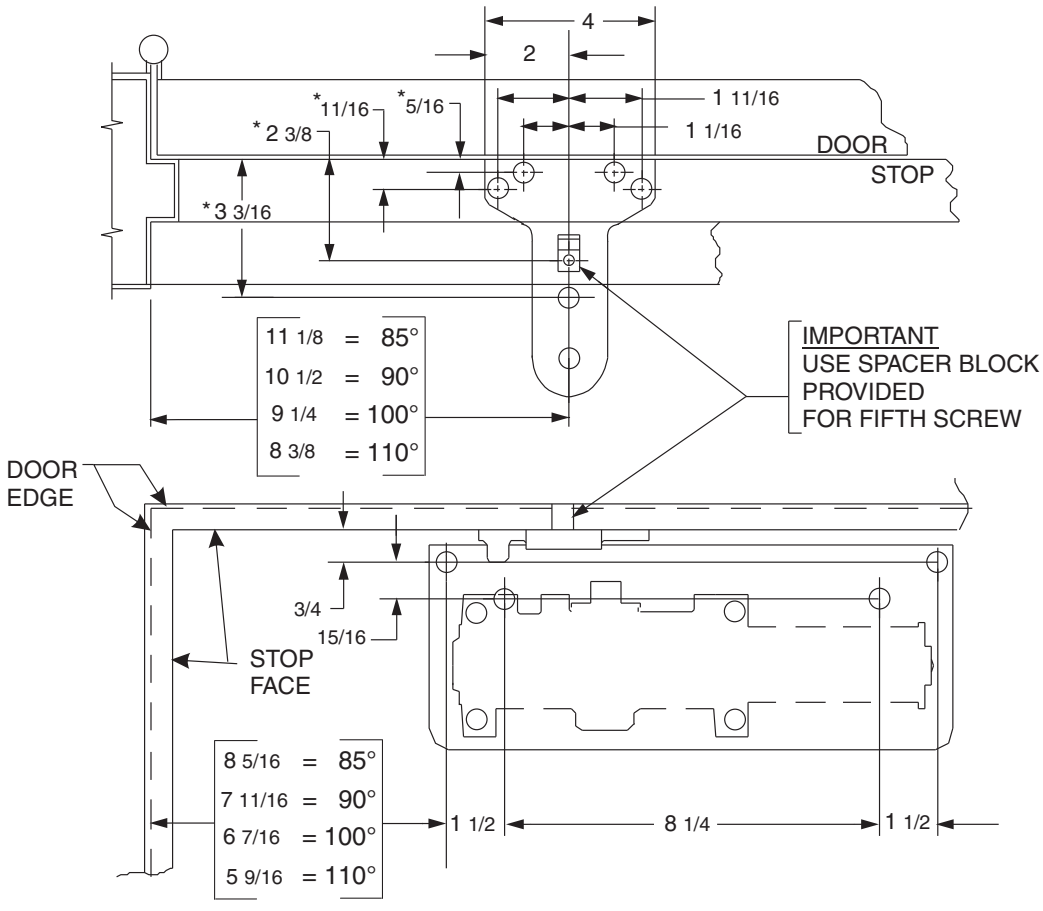

PUSH SIDE MOUNT ON: 4110-18 DROP PLATE

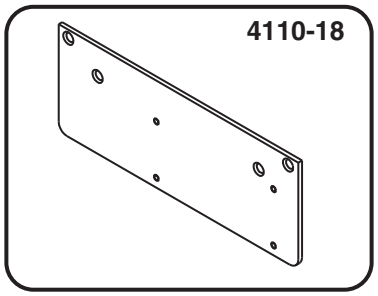

NOTE:
* INCREASE THESE DIMENSIONS 1/4" WHEN SPRING CUSH OPTION IS USED.

4110T PUSH SIDE (DOOR MOUNT) DROP PLATE

PERMITS 110° MAXIMUM OPENING

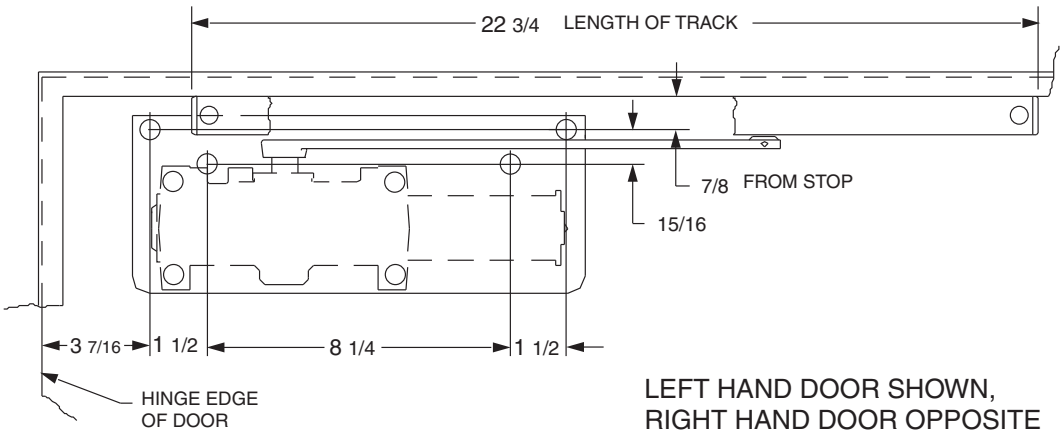

PUSH SIDE MOUNT ON: 4110-18 DROP PLATE

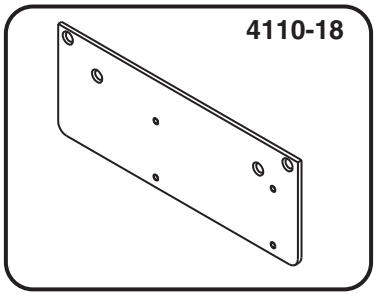

LEFT HAND DOOR SHOWN,
RIGHT HAND DOOR OPPOSITE

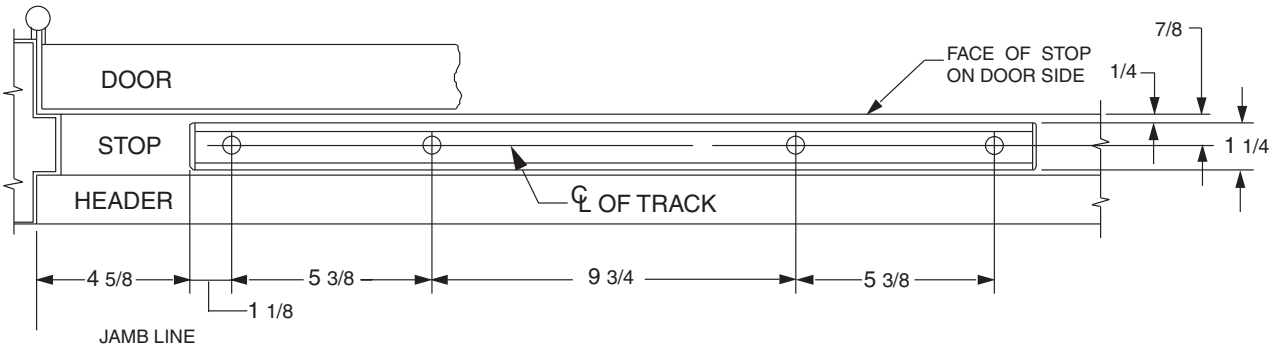

4210T PUSH SIDE (DOOR MOUNT) DROP PLATE

PERMITS 110° MAXIMUM OPENING

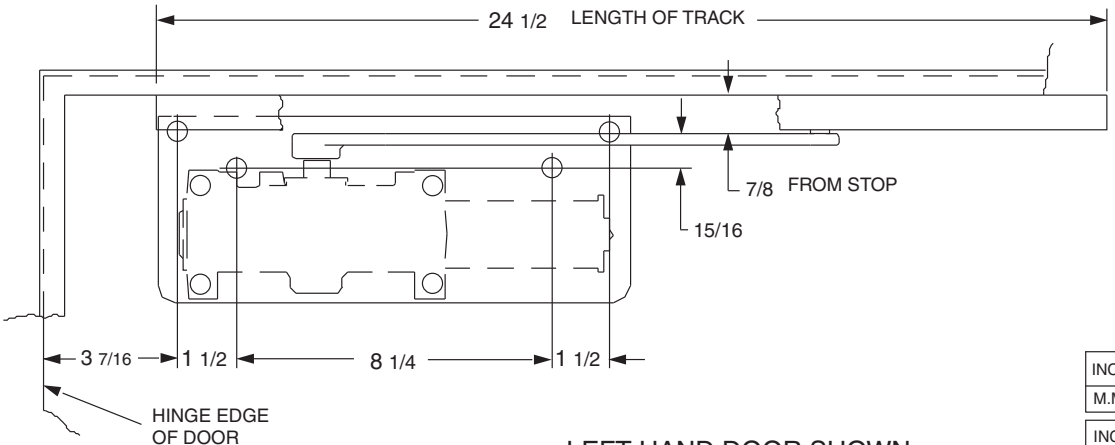

PUSH SIDE MOUNT ON: 4110-18 DROP PLATE

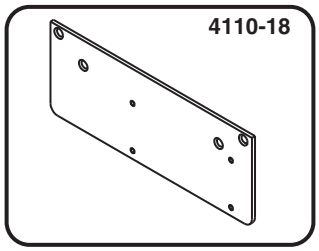

INCH	1/4	7/8	15/16	1 1/8	1 1/4	1 3/8	1 1/2	3
M.M.	13	22	24	38	38	38	38	49

INCH	3 7/16	4 5/8	5 1/4	5 3/8	8 1/4	9 3/4	21 3/4	22 3/4
M.M.	64	105	113	119	164	189	553	578

LEFT HAND DOOR SHOWN,
RIGHT HAND DOOR OPPOSITE

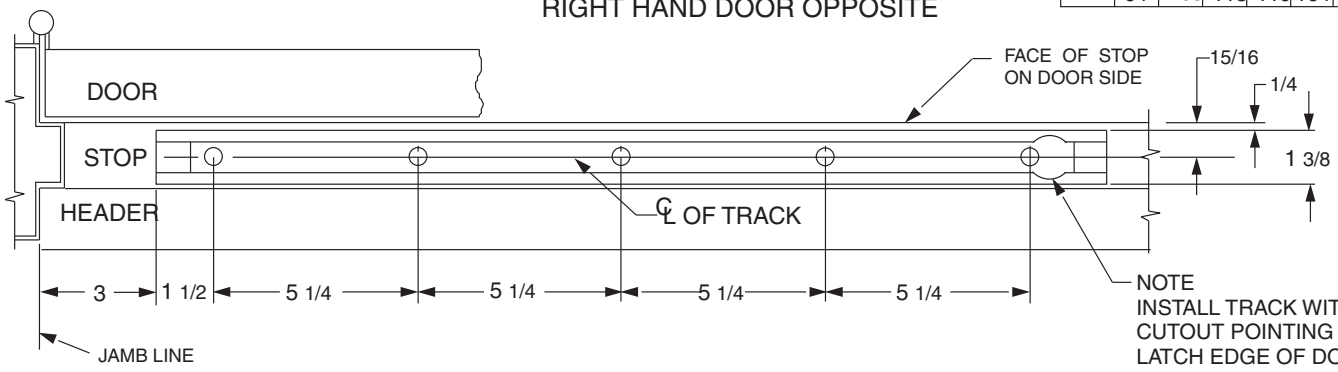

NOTE
INSTALL TRACK WITH CIRCULAR CUTOUT POINTING TOWARD LATCH EDGE OF DOOR.

Customer Service

1-877-671-7011 www.allegion.com/us

ALLEGION

© Allegion 2014
Printed in U.S.A.
28501 Rev. 01/14-f

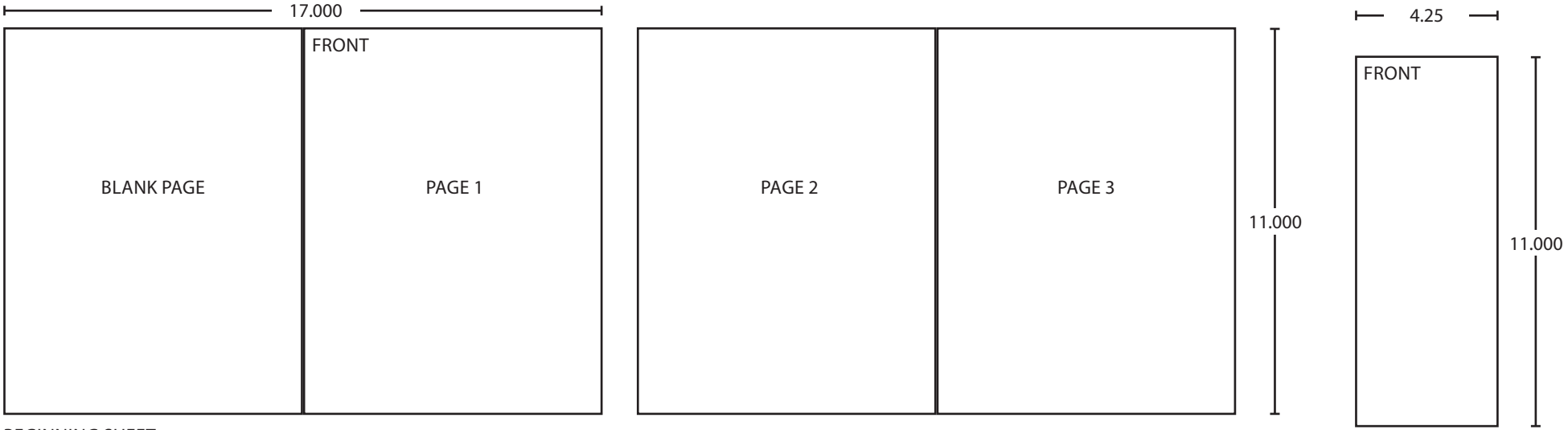

BEGINNING SHEET

FOLDED SHEET

Additional Notes:
1. None

Revision History					
A	B	C	D	E	F
N/A	N/A	N/A	N/A	N/A	043812

Material
White Paper

Notes
1. printed two sides
2. printed black
3. tolerance ± .13
4. printed in country may vary
5. drawings not to scale

Revision Description:
F > Revised artwork

Edited By	Approved By	EC Number	Release Date
R. Byun	M. Sasso	043812	01-01-14

Title
4110 & 4210 Series Drop Plate Instruction Sheet

Creation Date	Number	Revision
04-27-10	28501	F

Created By
N/A

Software: InDesign CS6

Activity
3899 Hancock Expwy
Security, CO 80911

© Allegion 2014