4010, 4020, & 4110 Series

26367

Door Closers with Fusible Link Arms

Installation Instructions

The Fusible Link Arm is handed and cannot be reversed. Hand of arm and hand of door must correspond. The hand of arm is stamped on the vertical part of the shoe facing the Hold Open Nut. (CAN ONLY BE USED WITH SIZE 1-5 CLOSERS)

1 4010

1a For all degree's of door opening, increase the following dimension:

- Vertical distance from top jamb line to center of the shoe screw is **increased from ⅝" to 1"**.

1b For 90° to 100° opening, increase the following dimensions:

- (Reg & 4010-18 Drop Plate Mount) Distance from jamb edge to center of first screw on the shoe is **increased from 12 5/16" to 13 5/16"**.
- (Reg. Mount) Distance from door edge to center of the first screw on closer body is increased from 7" to 8"; (4010-18 Drop Plate Mount increase from 6 7/16" to 7 7/16".
- Hold open nut must be on top. (see Fig. 1)

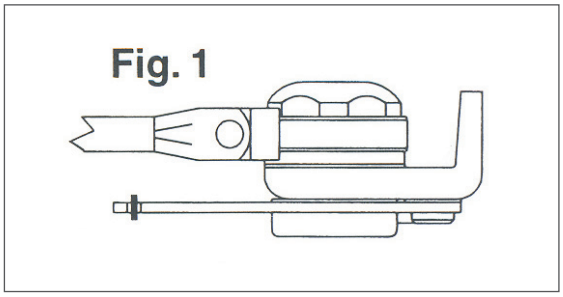

2 4020 (3 ⅞ Maximum Reveal)

2a Increase the vertical distance from the top door edge to the center of the shoe screw by the following dimensions:

- (No Drop Plate) **Increased from ⅝" to 1"**.
- (4020-18 Drop Plate) **Increased from 1 ¾" to 2 ⅛"**.
- (4020-18G Drop Plate) **Increased from 2 ½" to 2 ⅞"**.

2b Hold Open nut must be on bottom. (see Fig. 2)

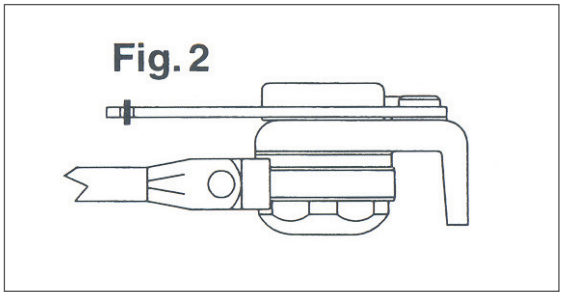

3 4110

3a (Reg. Mount) Vertical distance from stop face of frame to top screw on closer body is **increased from 2 3/16" to 2 ¾"**.

3b (4110-18 Drop Plate Mount) Vertical distance from stop face of frame to top screw on drop plate is **increased from ¾" to 1 5/16"**.

3c Hold open nut must be on top. (see Fig. 1)

3d Requires installing the fusible link parallel arm soffit shoe (see Fig. 3) to standard shoe templating.

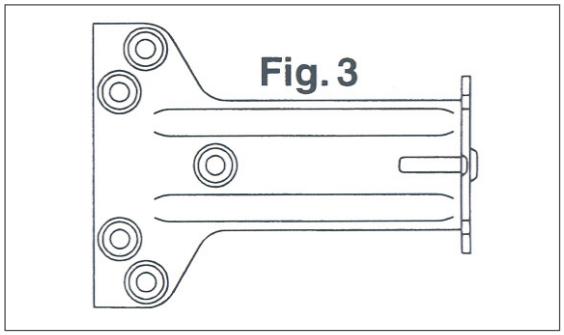

4 To Adjust Hold Open

4a Arm is pre-set to hold open at approximately 90°.

4b To change setting: Loosen adjusting nut; open door to 5° to 7° before the desired hold open position; **firmly tighten adjusting nut.**

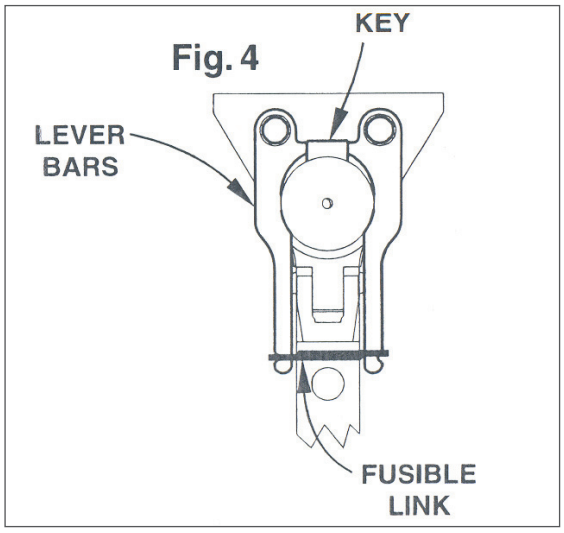

5 If Fusible Link Requires Replacement, Reassemble As Follows

5a Return door to original hold open position. This will automatically line up key & lever bars. (see Fig.4)

5b With pliers, carefully squeeze lever bars together just enough to install fusible link. **DO NOT USE EXCESSIVE FORCE.**

Customer Service
1-877-671-7011 www.allegion.com/us

ALLEGION

© Allegion 2014
Printed in U.S.A.
26367 Rev. 01/14-c

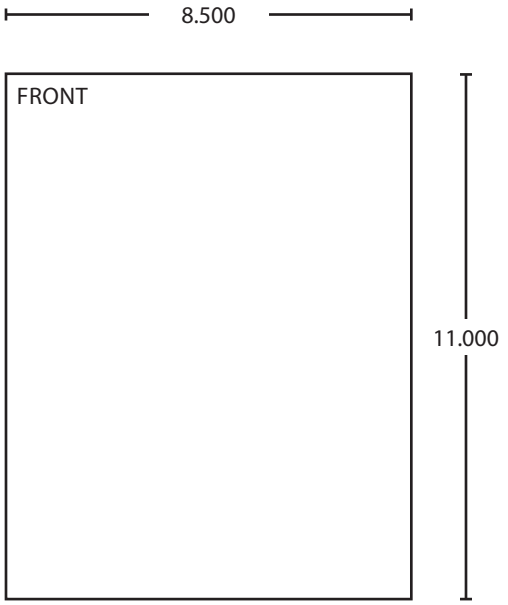

BEGINNING SHEET

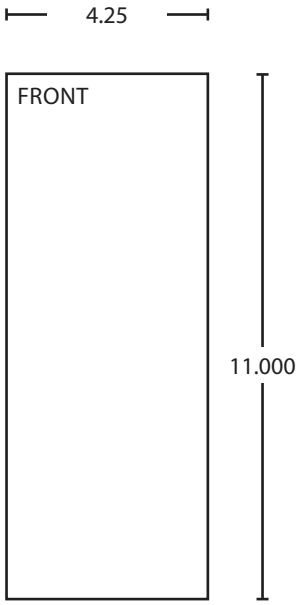

FOLDED SHEET

Additional Notes:
1. None

Revision History					
A	B	C	D	E	F
N/A	N/A	043812			

Material
White Paper

Notes
1. printed one side
2. printed black
3. tolerance ± .13
4. printed in country may vary
5. drawings not to scale

Revision Description:
C > Revised artwork

Edited By	Approved By	EC Number	Release Date
D. Myers	M. Sasso	043812	01-01-14

Title
4010, 4020 & 4110 Series Fusible Link Instruction Sheet

Creation Date	Number	Revision
04-27-10	26367	C

Created By
N/A

Software: InDesign CS6

Activity
3899 Hancock Expwy
Security, CO 80911

© Allegion 2014