ALLEGION™

LCN®

4000 Series

Surface mounted closers





Delivering reliable solutions for over a century

Slamming church doors are the beginning of LCN's rich history

In 1877, our founder was hired to solve this problem of a Boston church's swinging doors that slammed noisily shut. It led to the invention of the world's first door check. His innovation continued, leading to the formation of the LCN brand in 1926. A passion for quality has guided LCN ever since and continues to set it apart from other brands.

Manufactured with pride in Princeton, Ill., U.S.A., by our highly skilled and tenured craftsmen. Our solutions are specifically designed for enhanced durability, consistency and longevity. From meticulous engineering to strict quality control, LCN accepts no less than the best.

Every person in the LCN plant plays a role in the rigorous quality control process

This level of shared commitment is why, in part, our Princeton plant was honored with the 2017 Manufacturing Leadership Award from the Manufacturing Leadership Council. The award recognizes manufacturing companies that are shaping the future of global manufacturing by delivering clear and compelling value, return on investment and other tangible outcomes. With millions of door closers installed in facilities across the world, you can be confident in choosing LCN.

Features that set the 4000 Series apart

- Double heat-treated pinions gives proper hardness and strength to the parts where they need it
- Liquid X fluid performs in temperatures from -30°F to 120°F, reducing the need for seasonal adjustment
- Full complement bearings help withstand abuse in real-world applications because of increased surface contact
- The LCN Green Dial provides easy visual adjustments and indicator to dial in the strength needed for any environmental condition



Information and customer care

us.allegion.com

US 877.671.7011
Canada 800.900.4734

support@allegion.com
Closers_TechProdSupport@allegion.com

www.youtube.com/LCNHardware

Ordering

Allegion_Orders@allegion.com

eFax: 1.800.248.1460

4000 Series surface mounted closers

Product selection guide

Surface mounted 4000 Series LCN closers feature a modern design engineered for each application, easy installation, and trusted performance. This guide is based on the desired mounting of the closer.

Exterior door

- **Push side mounted**
  - **Double lever arm**: 4020, 4040XP, 4110, 4210*, 4050A
- **Pull side mounted**
  - **Double lever arm**: 4010, 4040XP, 4510*, 4050A

Interior door

- **Push side Mounted**
  - **Double lever arm**: 4020, 4040XP, 4110, 4210*, 4030, 4050A
  - **Single lever arm**: 4110T, 4040XPT, 4210T*, 4050AT
- **Pull side Mounted**
  - **Double lever arm**: 4040XP, 4030, 4050A, 4510*, 4010
  - **Single lever arm**: 4000T, 4010T, 4020T, 4510T*, 4040XPT, 4030T, 4050AT

* Indicates high security closer. Refer to that section of the catalog.

Product comparison

This chart shows a basic comparison of 4000 Series closers.
Refer to the specific closer chapter for complete details.

	Mounting					Finish		Cover			Cylinder			Arm function*							
	Hinge (pull) side	Top jamb (pull)	Top jamb (push)	Parallel arm	Stop face	Powder coat	Plated	Plastic	Metal	Non-handed	Non-sized	Accessibility	Delay action***	CYLAVB***	Regular (double)	Standard (single)	Hold Open	Fusible Link	EDA/HEDA	CUSH/HCUSH	SCUSH/SHCUSH	Double Egress
4010	■	■	■	■	■	■	■	■	■	■	■	♿	■	■	140°	■	140°	140°	■	■	■	■
4010T	■	■	■	■	■	■	■	■	■	■	■	♿	■	■	■	180°	120°	■	■	■	■	100°
4020	■	■	■	■	■	■	■	■	■	■	■	♿	■	■	180°	■	140°	140°	■	■	■	■
4020T	■	■	■	■	■	■	■	■	■	■	■	♿	■	■	■	180°	100°	■	■	■	■	■
4030	■	■	■	■	■	■	■	■	■	■	■	♿	■	■	180°	■	180°	■	110°	100°	100°	■
4030T	■	■	■	■	■	■	■	■	■	■	■	■	■	■	■	180°	180°	■	■	■	■	■
4040XP	■	■	■	■	■	■	■	■	■	■	■	♿	■	■	120°	■	120°	■	180°	110	110°	■
4040XPT	■	■	■	■	■	■	■	■	■	■	■	♿	■	■	■	120°	110°	■	■	■	■	95°
4050A	■	■	■	■	■	■	■	■	■	■	■	♿	■	■	180°	■	180°	■	180°	110°	110°	■
4050AT	■	■	■	■	■	■	■	■	■	■	■	♿	■	■	■	180°	180°	■	■	■	■	95°
4110	■	■	■	■	■	■	■	■	■	■	■	♿	■	■	■	■	180°	180°	180°	110°	110°	■
4110T	■	■	■	■	■	■	■	■	■	■	■	♿	■	■	■	110°	100°	■	■	■	■	■
4000T	■	■	■	■	■	■	■	■	■	■	■	♿	■	■	■	90°	■	■	■	■	■	■

■ Available
■ Not available

♿ Closer available with less than 5.0 lbs. opening force on 36" door.
* Maximum opening/hold open point with standard template. See individual closer series for degrees of opening per installation.
** Advanced Variable Back Check.
*** Delay action for 4040XP incorporates standard 4041 cylinder.

Applications
- For aluminum, hollow metal, or wood swinging doors and frames.
- Can be used with hinge or pivot mounted door.
- Adapter plates and other installation accessories available for non-standard conditions.

Features common to 4000 Series
- Each closer (except 4050A, 4050AT, 4040XP, 4040XPT, 4030, 4030T) is designed for a specific mounting; hinge side, top jamb, or parallel arm. 4040XP closer with regular or Hold Open Arm mounts hinge side or top jamb. 4030, 4040XP and 4050A regular parallel arm closers include 62PA shoe required to parallel arm mount either Regular or Hold Open Arm.
- Handed for right or left swinging doors, except for 4000T, 4030, 4030T, 4040XP, 4050A, 4050AT and 4040XPT.
- Adjustable hydraulic back check cushions opening swing prior to 90º.
- Separate regulation of general closing speed and latching speed.
- Joints in regular arm and shoe adapt to uneven trim.
- Reversible shoe to boost latching power on double lever arms.
- Not designed for exterior mounting or exposure to elements.

Design assistance
LCN has been providing reliable solutions to unique door control problems since 1925. Design and specification assistance are only a phone call away. Contact LCN for assistance or technical information at 877-671-7011 or fax 800-248-1460 (Order Entry), Fax 815-879-1495 for Product Support.

Warranty
30 year limited warranty; 25 year limited warranty (4050A). See General Information catalog for complete warranty details.

Specifications
Refer to “Specifications” section for suggested architectural specifications.

Materials
- High strength cast iron or cast aluminum (4050A) cylinder.
- Forged steel main arms.
- One piece forged steel piston.
- Double heat treated pinion.
- LCN’s all weather “Liquid X” fluid performs to temperature ranges from 120ºF (49ºC) to -30ºF (-35ºC) without any seasonal adjustment.
- High efficiency, full complement, low friction bearings.
- Tamper resistant regulating screws.
- Full rack and pinion hydraulic action.
- Low friction track and roller combination for all single lever arm (track style) closers.

Finishes
- Available in seven standard or optional custom powder coat finishes to blend with door and frame.
- LCN’s powder coat finishes surpass 100 hours of salt spray which is over four times the ANSI standard for corrosion resistance.
- For installations where a higher level of corrosive resistance is required, LCN offers an optional Special Rust Inhibitor (SRI) pre-treatment. Closers that combine the exclusive LCN powder coat finish and the SRI pre-treatment exceed the ANSI standard for corrosion resistance even further.
- Plated finishes are available as an option to accent door and frame. (SRI not available with plated finishes).

Listings and approvals
UL listed for self-closing doors without hold open under “swinging door closers”(GVEV) file R1943. Tested and certified under ANSI Standard A156.4 Grade One. Consult factory for details. Consult factory for other listings such as; cUL, California State Fire Marshal, Bureau of Standards and Appeals.

Positive pressure
LCN closers have been certified for three hours by UL to be in compliance with UL 10C. Contact LCN for specific details on door closer fire ratings.

Fasteners
- 4010, 4010T, 4020, 4020T, 4040XP, 4040XPT, 4050A, 4050AT, 4110, 4110T series closers are shipped with a standard Self Reaming and Tapping Screw (SRT) with Phillips head SRT screws.
- 4000T series closers are shipped with Wood and Machine Screws (WMS) with Phillips head wood and machine screws.
- 4030, 4030T series closers are shipped with a standard Wood and Self-Tapping Machine Screws (WMS) pack with Phillips head wood and self-tapping machine screws.
- Standard LCN Through Bolts (TB) can be installed on 1 3/4" (44 mm) thick doors with 1/4"-20 machine screws. Optional Through Bolt (TB) sizes are available for 1 5/8" (41 mm) or 1 3/8" (35 mm) door thickness, but this must be specified when ordering.

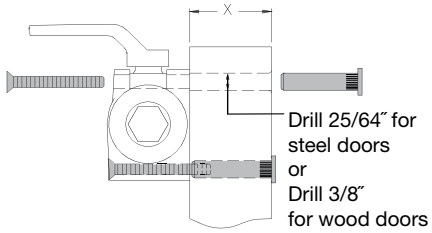

Notes:
1. For through bolts, specify door thickness if other than 1 3/4" (44mm), represented in diagram as dimension "X".
2. Phillips head, metric machine screws are available, please specify.
3. LCN recommends the use of wood screws, available in optional WMS screw packs, for wood door applications.

4010 Series



The 4010 is LCN's best performing heavy duty closer designed specifically for institutional and other rugged high traffic applications.

Features

Certifications	Grade 1 - ANSI A156.4, UL 10C, ADA, 100 hour salt spray, meets BAA - Buy American Act
Body construction	▪ Cast iron body ▪ Full complement bearing ▪ 1 1/2" diameter piston ▪ 11/16" diameter double heat treated pinion journal
Fluid	All weather fluid
Handing	Handed
Templating	Peel-n-Stick templates - 2 1/2" x 6" mounting hole pattern
Size	Adjustable 1-5 or sized 6
Warranty	30 years

Cover	▪ Plastic cover (PC), standard ▪ Metal cover (MC), optional
Fasteners	Self reaming and tapping screws (SRT)
Mounting	Hinge (Pull side)
Arms	Regular arm
Finishes/colors/ powder coat	▪ 622 Matte black ▪ 689 Aluminum ▪ 690 Statuary bronze ▪ 691 Light bronze ▪ 693 Black ▪ 695 Dark bronze ▪ 696 Brass ▪ Custom colors optional ▪ Optional SRI primer - powder coat only ▪ Optional plated finishes

Special templates | Customized installation templates or products may be available to solve non-standard applications. Contact LCN Product Support for assistance.

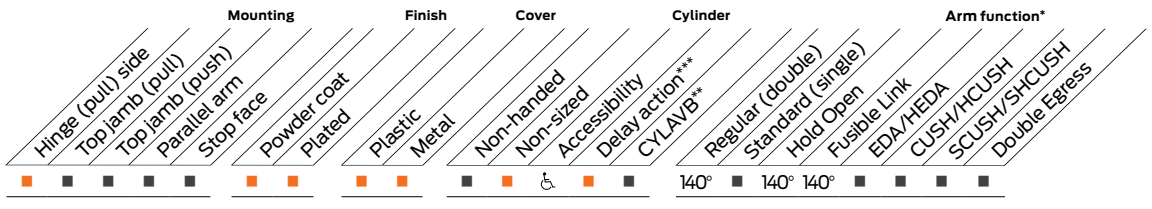

■ Available
■ Not available

♿ Closer available with less than 5.0 lbs. opening force on 36" door.
* Maximum opening/hold open point with standard template.
** Advanced Variable Back Check.
*** Delay action for 4040XP incorporates standard 4041 cylinder.

Mounting details

Hinge (pull) side mounting

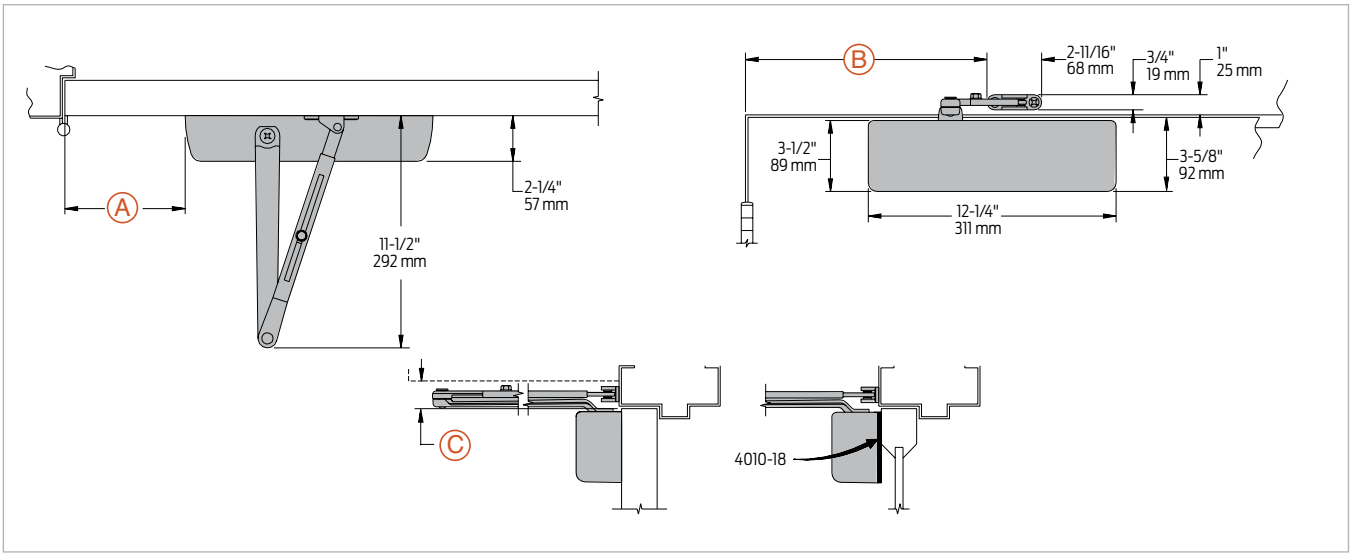

Butt hinges	Should not exceed 5" (127 mm) in width
Auxiliary stop	Recommended at hold open point or where a door cannot swing 140°
Reveal	Should not exceed 3/4" (19 mm); should not exceed 1/8" (3 mm) for fusible link arm
Top rail	▪ Less than 3 3/4" (95 mm) requires plate, 4010-18 ▪ Plate requires 2" (51 mm) minimum ▪ Clearance of 2 1/4" (57 mm) behind door required for 90° installation
Delay action	▪ Add suffix "CYLDEL" to selected cylinder ▪ Not available with 4016 cylinder ▪ Delays closing from maximum opening to approximately 70° ▪ Delay time adjustable up to approximately 1 minute
Maximum opening	Can be templated for:
	100°: A = 5 15/16" (151 mm) B = 11 15/16" (303 mm) 140°: A = 4 3/16" (106 mm) B = 10 3/16" (259 mm)
	Hold open points up to maximum opening with Hold Open Arm
Arm clearance	Regular Arm: C = 1 1/16" (27 mm) Hold Open Arm: C = 1 3/8" (35 mm) Fusible Link Arm requires: C = 1 5/8" (41 mm)

Note: Hold open points up to maximum opening with Hold Open Arm.

Accessories

Cylinders



4011(6)-3071
Cast iron cylinder assembly (CYL)
- Handed
- Standard

Covers



4010-72
Plastic Cover (PC)
- Non-handed

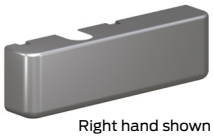

Right hand shown

4010-72MC
Metal Cover (MC)
- Handed
- Required for plated finishes and custom powder coat finishes
- Optional

Arms



4010-3077
Regular Arm (REGARM)
- Non-handed



4010-3049
Hold Open Arm (H)
- Handed
- Provides hold open function, adjustable at elbow
- Optional



4010-3049FL
Fusible Link Arm (FL)
- Handed
- Releases hold-open function when exposed to temperatures above 165° F; 1/8" (3 mm) maximum reveal
- Optional

Note: Check local codes before specifying FL arms. NOT A life safety product!

Installation accessories



4010-18
Plate
- Required where top rail is less than 3 3/4" (95 mm)
- Requires minimum 2" (51 mm) top rail

Ordering information

How-to-order 4010 Series closers

1. Select cylinder size
- ☐ 4011 (adjustable from size 1 to 5)
- ☐ 4016 (CYLDEL not available)

2. Specify hand
- ☐ Right Hand (RH)
- ☐ Left Hand (LH)

3. Select finish
- ☐ Standard powder coat _____
  Matte Black (622), Aluminum (689), Dark Bronze (695), Statuary Bronze (690), Light Bronze (691), Black (693), or Brass (696)

Closer will be shipped with:
- Standard cylinder
- Standard cover
- Regular arm
- Self reaming and tapping screws
  (unless options listed below are selected)

Closer options

Cylinder
- ☐ Delay action cylinder (CYLDEL)

Cover
- ☐ Metal cover (MC)

Arm
- ☐ Hold Open Arm (H)
- ☐ Fusible Link Arm, 165ºF (FL)

Finish
- ☐ Custom powder coat (RAL) _____
  (handed metal cover required)
- ☐ Plated finish _____
  (handed metal cover required)
- ☐ SRI primer (use with powder coat finishes only)

Screw pack
- ☐ Through bolt[1] and self reaming and tapping screws (TBSRT)
- ☐ Wood and machine screws (WMS)
- ☐ Through bolt[1] wood and wachine screw (TBWMS)
- ☐ Torx machine screws (TORX)
- ☐ Wood and machine screws (WMS)
- ☐ Through bolt[1] and torx machine screws (TBTRX)

Installation accessories
- ☐ Plate, 4010-18

Special template
- ☐ ST- _____

1. Specify door thickness if other than 1 3/4".

Table of sizes

- Select closer based on width of door
- The spring power of non-sized 4011 cylinder is adjustable from size 1 through size 5 and is shipped set to size 3
- Sized 4010 Series cylinders available in size 6
- Delay action not available with 4016 cylinder

Exterior (and vestibule) door width

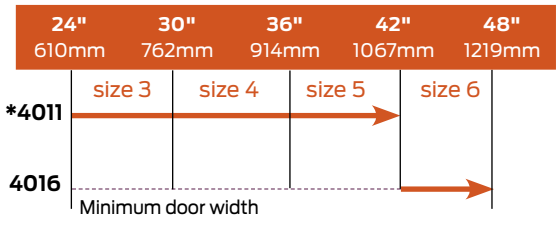

Interior door width

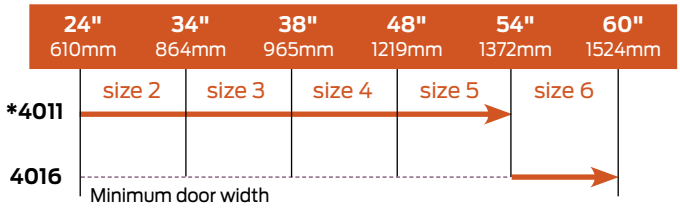

→ Indicates recommended range of door width for closer size.
* Adjustable Size 1 thru 5.

Reduced opening force 4010 Series closers

CAUTION! Any manual door closer, including those certified by BHMA to conform to ANSI Standard A156.4, that is selected, installed and adjusted based on ADA or other reduced opening force requirements may not provide sufficient power to reliably close and latch a door.

Refer to Automatic Operators catalog for information on systems that meet reduced opening force requirements without effecting closing power.

Door width	36"	42"	48"
8.5* lbs.	4011	4011	4011
5.0* lbs.	4011	4011	4011

* Maximum opening force.

4010T Series



The 4010T is LCN's best performing heavy duty track closer designed specifically for interior doors in institutional and other rugged high traffic applications.

Features

Certifications	Grade 1 - ANSI A156.4, UL 10C, ADA, 100 hour salt spray, meets BAA - Buy American Act
Body construction	▪ Cast iron body ▪ Full complement bearing ▪ 1 1/2" diameter piston ▪ 11/16" diameter double heat treated pinion journal
Fluid	All weather fluid
Handing	Handed
Templating	Peel-n-Stick templates - 2 1/2" x 6" mounting hole pattern
Size	Sized 1, 3 or 4
Warranty	30 years

Cover	▪ Plastic cover (PC), standard ▪ Metal cover (MC), optional
Fasteners	Self reaming and tapping screws (SRT)
Mounting	Hinge (Pull side)
Arms	Standard arm and track with roller
Finishes/colors/ powder coat	▪ 622 Matte black ▪ 689 Aluminum ▪ 690 Statuary Bronze ▪ 691 Light Bronze ▪ 693 Black ▪ 695 Dark Bronze ▪ 696 Brass ▪ Custom colors optional ▪ Optional SRI primer - powder coat only ▪ Optional plated finishes

Special templates | Customized installation templates or products may be available to solve non-standard applications. Contact LCN Product Support for assistance.

Mounting					Finish		Cover			Cylinder			Arm function*							
Hinge (pull) side	Top jamb (pull)	Top jamb (push)	Parallel arm	Stop face	Powder coat	Plated	Plastic	Metal	Non-handed	Non-sized	Accessibility	Delay action***	CYLAVB***	Regular (double)	Standard (single)	Hold Open	Fusible Link	EDA/HEDA	CUSH/HCUSH	SCUSH/SHCUSH	Double Egress
■	■	■	■	■	■	■	■	■	■	■	♿	■	■	■	180	120	■	■	■	■	100

■ Available
■ Not available

♿ Closer available with less than 5.0 lbs. opening force on 36" door.
* Maximum opening/hold open point with standard template.
** Advanced Variable Back Check.
*** Delay action for 4040XP incorporates standard 4041 cylinder.

Mounting details

Hinge (pull) side mounting

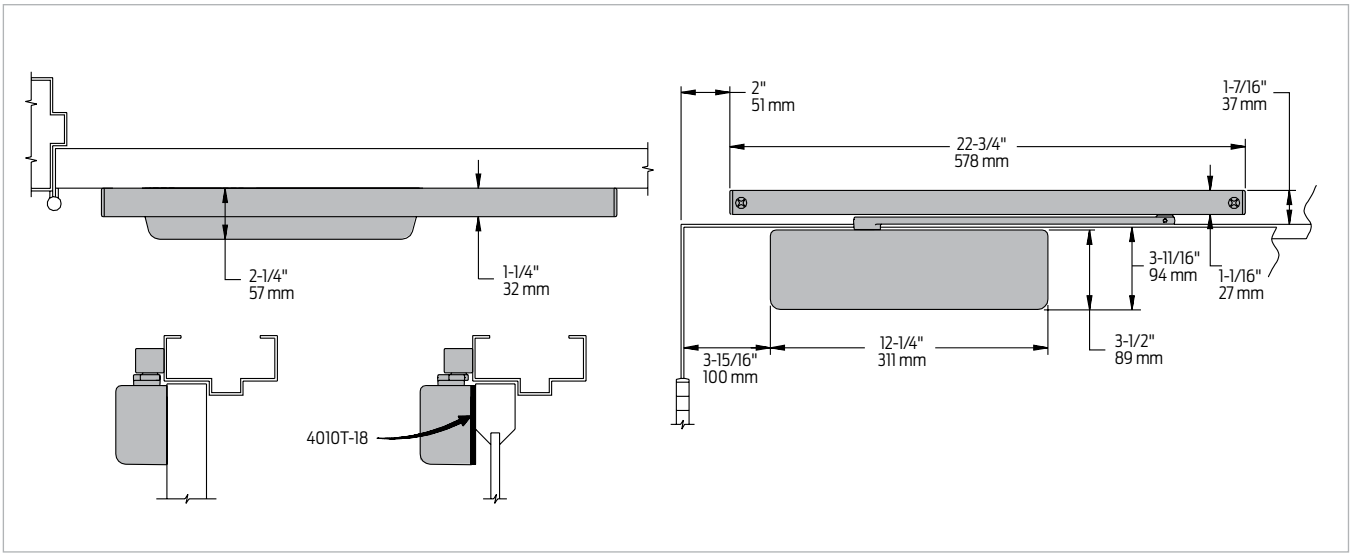

Butt hinges	Should not exceed 5" (127 mm) in width
Auxiliary stop	Recommended at hold open point or where a door cannot swing 180°
Reveal	▪ Should not exceed 1/8" (3 mm) for Standard Arm ▪ Should not exceed 3 5/16" (84 mm) for Double Egress Arm
Top rail	Less than 3 3/4" (95 mm) requires plate, 4010T-18
Head frame	Requires 1 1/2" (38 mm) minimum
Clearance	2 1/4" (57 mm) behind door required for 90° or 180° installation
Maximum opening	▪ Templating allows 180° with Standard Arm, limited to 120° when optional bumper is installed ▪ Consult factory if door will be held open at 180° ▪ Variable hold open angles with infinite options

Notes:
1. Optional track bumper assembly assists backcheck in cushioning the opening swing of the door. It is not intended to replace an auxiliary stop.
2. Plate requires 2" (51 mm) minimum.

Accessories

Cylinders

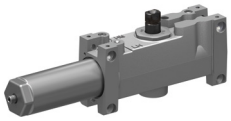

4011T(3)(4)-3071
Cast iron cylinder assembly (CYL)
- Handed
- Standard

Covers



4010T-72
Plastic Cover (PC)
- Non-handed
- Standard

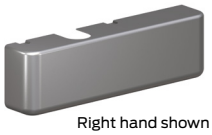

Right hand shown

4010T-72MC
Metal Cover (MC)
- Handed
- Required for plated finishes and custom powder coat finishes
- Optional

Arms



4010T-3077T
Standard Arm (STDTRKARM)
- Handed
- Does not include track roller



4010T-3077DE
Double Egress Arm (DE)
- Handed
- For double egress doors and frames
- Does not include track roller
- Maximum reveal is 3 5/16" (84mm)
- Optional

Tracks



4010T-3038
Standard Track (STDTRK)
- Non-handed
- Non hold open
- Will accept hold open clip and/or bumper assembly
- Standard



4010T-3038B
Track with Bumper (BUMP)
- Non-handed
- Non hold open
- With bumper assembly installed
- Will accept hold open clip
- Optional



4010T-3038H
Hold Open Track (H)
- Non handed
- With hold open clip installed
- Will accept bumper assembly
- Optional



4010T-3038HB
Hold Open Track with Bumper (HBMP)
- Non-handed
- With hold open clip and bumper assembly installed
- Optional

Installation accessories



4010T-18
Plate
- Required where top rail is less than 3 3/4″ (95 mm)
- Requires minimum 2″ (51 mm) top rail

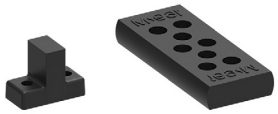

4010T-169
Track bumper
- Mounts in track to assist back check, does not replace auxiliary stop
- Limits maximum opening
- Consists of bumper, bumper post, and mounting screw



4010T-3054
Hold open clip
- Mounts in track to provide hold open function
- Hold open point controlled by clip location
- Consists of clip and mounting screws
- Requires 4010T-3034H Track Roller



4010T-3034
Track roller
- Quiet, low friction roller assembly
- Shoulder dimension "X" = 1/16″ (2mm)



4010T-3034H
Track roller
- Quiet, low friction roller assembly
- Shoulder dimension "X" = 1/16″ (2mm)
- Spring-loaded hold open mechanism

Ordering information

How-to-order 4010T Series closers

1. Select cylinder size
- ☐ 4011T
- ☐ 4013T
- ☐ 4014T

2. Specify hand
- ☐ Right Hand (RH)
- ☐ Left Hand (LH)

3. Select finish
- ☐ Standard powder coat _____
  Matte Black (622), Aluminum (689), Dark Bronze (695), Statuary Bronze (690), Light Bronze (691), Black (693), or Brass (696)

Closer will be shipped with:
- Standard cylinder
- Standard cover
- Standard arm
- Track roller
- Standard track
- Self reaming and tapping screws
  (unless options listed below are selected)

Closer options

Cover
- ☐ Metal cover (MC)

Arm
- ☐ Double Egress Arm (DE)[2]

Track
- ☐ Track with Bumper (BUMP)
- ☐ Hold Open Track (H)
- ☐ Hold Open Track with Bumper (HBMP)

Finish
- ☐ Custom powder coat (RAL) _____
  (handed metal cover required)
- ☐ Plated finish _____
  (handed metal cover required)
- ☐ SRI primer (use with powder coat finishes only)

Screw pack
- ☐ Through bolt[1] and self reaming and tapping screws (TBSRT)
- ☐ Wood and machine screws (WMS)
- ☐ Through bolt[1] wood and machine screws (TBWMS)
- ☐ Torx machine screws (TORX)
- ☐ Through bolt[1] and torx machine screws (TBTRX)

Installation accessories
- ☐ Plate, 4010T-18

Special template
- ☐ ST- _____

1. Specify door thickness if other than 1 3/4".
2. Using this closer on double-egress doors and frames requires the closer to be ordered with a "DE" suffix (i.e., 4014T DE). Standard "DE" option will accommodate pull side reveals up to 3 5/16". For deeper reveals, consult factory.

Table of sizes

- Select closer based on width of door
- Sized 4010T Series cylinders available in size 1, 3 or 4

Interior door width

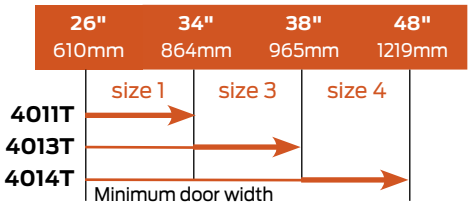

→ Indicates recommended range of door width for closer size.

Reduced opening force 4010T Series closers

CAUTION! Any manual door closer, including those certified by BHMA to conform to ANSI Standard A156.4, that is selected, installed and adjusted based on ADA or other reduced opening force requirements may not provide sufficient power to reliably close and latch a door.

Refer to Automatic Operators catalog for information on systems that meet reduced opening force requirements without effecting closing power.

Door width	36"	42"	48"
8.5* lbs.	N/A	N/A	N/A
5.0* lbs.	4011T	4011T	4011T

* Maximum opening force.

4020 Series



The 4020 is a heavy duty closer with adjustable spring power using the LCN Green Dial. This creates a custom fit to meet the specific demands of high traffic use and brings reliable performance.

Features

Certifications	Grade 1 - ANSI A156.4, UL 10C, ADA, 100 hour salt spray, meets BAA - Buy American Act
Body construction	▪ Cast iron body ▪ Full complement bearing ▪ 1 ½" diameter piston ▪ 11/16" diameter double heat treated pinion journal
Fluid	All weather fluid
Handing	Handed
Templating	Peel-n-Stick templates - 2 ½" x 6" mounting hole pattern
Size	Adjustable 1-5 or sized 6
Warranty	30 years

Cover	▪ Plastic cover (PC), standard ▪ Metal cover (MC), optional
Fasteners	Self reaming and tapping screws (SRT)
Mounting	Top jamb (Push side)
Arms	Regular arm
Finishes/colors/ powder coat	▪ 622 Matte black ▪ 689 Aluminum ▪ 690 Statuary bronze ▪ 691 Light bronze ▪ 693 Black ▪ 695 Dark bronze ▪ 696 Brass ▪ Custom colors optional ▪ Optional SRI primer - powder coat only ▪ Optional plated finishes

Special templates | Customized installation templates or products may be available to solve non-standard applications. Contact LCN Product Support for assistance.

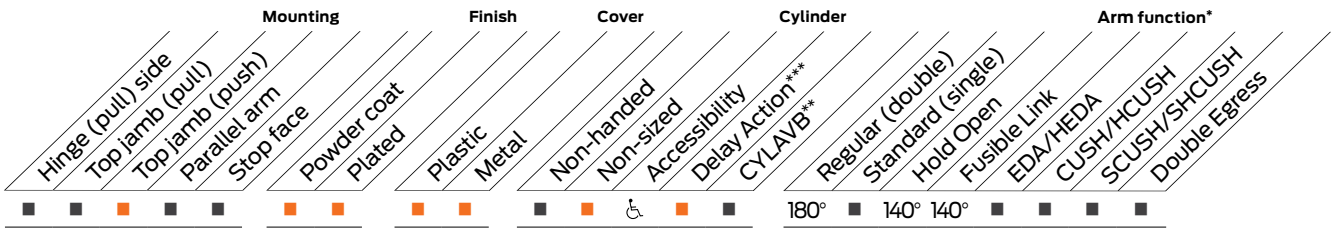

■ Available
■ Not available

♿ Closer available with less than 5.0 lbs. opening force on 36" door.
* Maximum opening/hold open point with standard template.
** Advanced Variable Back Check.
*** Delay action for 4040XP incorporates standard 4041 cylinder.

Mounting details

Top jamb (push) side mounting

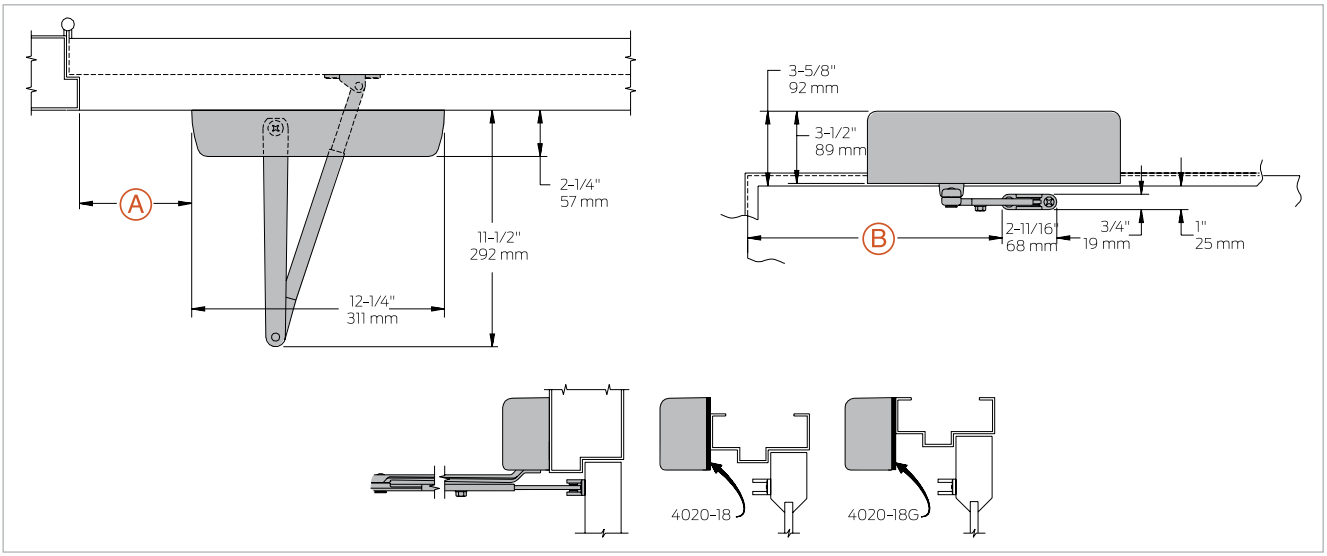

Butt hinges	Should not exceed 5" (127 mm) in width
Auxiliary stop	Recommended at hold open point or where the door cannot swing 180°
Reveal	▪ 2 9/16" (65 mm) allows 180° opening with regular arm ▪ 4" (102 mm) allows up to 140° opening with regular arm ▪ 8" (203 mm) allows up to 140° opening with Long Arm (LONG) where standard rod and shoe is replaced with optional long rod and shoe (4020-79LR)
Head frame	Less than 3 7/16" (87 mm) requires plate, 4020-18; use plate, 4020-18G for flush ceiling condition; either plate requires 1 3/4" (44 mm) frame minimum
Top rail	▪ Requires minimum 1 1/2" (38 mm) ▪ Closer on 4020-18 plate requires 2" (51 mm) minimum ▪ Closer on 4020-18G plate requires 2 3/4" (70 mm) minimum
Delay action	▪ Add suffix "CYLDEL" to selected cylinder ▪ Not available with 4026 cylinder ▪ Delays closing from maximum opening to approximately 75° ▪ Delay time adjustable up to approximately 1 minute
Maximum opening	Can be templated for: 100°: A = 6" (152 mm), B = 12 3/8" (314 mm) 140°: A = 4" (102 mm), B = 10 3/8" (264 mm) 180°: A = 2" (51 mm), B = 8 3/8" (213 mm)

Notes:
- Hold open points up to maximum opening or 140°, whichever is less, for Hold Open or Fusible Link Arm
- For hold open beyond 140°, use 4110 Series closer

Accessories

Cylinders

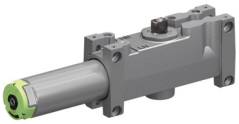

4021(6)-3071
Cast iron cylinder assembly (CYL)
- Handed
- Standard

Covers

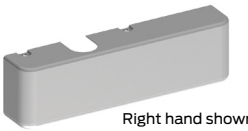

Right hand shown

4020-72
Plastic Cover (PC)
- Handed
- Standard

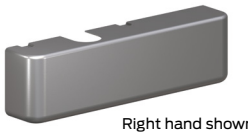

Right hand shown

4020-72MC
Metal Cover (MC)
- Handed
- Required for plated finishes and custom powder coat finishes
- Optional

Arms



4020-3077
Regular Arm (REGARM)
- Non-handed



4020-3077L
Long Arm (LONG)
- Non-handed
- Includes 4020-79LR for deep reveals
- Optional



4020-3049
Hold Open Arm (H)
- Handed
- Provides hold open function, adjustable at elbow
- 5 3/4" (146 mm) maximum reveal, 140° hold open
- Optional



4020-3049FL
Fusible Link Arm (FL)
- Handed
- Releases hold open function, adjustable at shoe, when exposed to temperatures above 165° F
- 3 7/8" (98 mm) maximum reveal
- Optional

Note: Check local codes before specifying FL arms. NOT A life safety product!

Installation accessories



4020-18
Plate
- Required where head frame is less than 3 7/16" (87 mm)
- Requires minimum 1 3/4" (44 mm) minimum head frame and 2" (51 mm) top rail 3 7/8" (98 mm) maximum reveal



4020-18G
Plate
- For flush ceiling condition
- Requires minimum 1 3/4" (44 mm) minimum head frame and 2 3/4" (70 mm) top rail

Ordering information

How-to-order 4020 Series closers

1. Select cylinder size
- ☐ 4021 (adjustable from size 1 to 5)
- ☐ 4026 (CYLDEL not available)

2. Specify hand
- ☐ Right Hand (RH)
- ☐ Left Hand (LH)

3. Select finish
- ☐ Standard powder coat _____

Matte Black (622), Aluminum (689), Dark Bronze (695), Statuary Bronze (690), Light Bronze (691), Black (693), or Brass (696)

Closer will be shipped with:
- Standard cylinder
- Standard cover
- Regular arm
- Self reaming and tapping screws (unless options listed below are selected)

Closer options

Cylinder
- ☐ Delay action cylinder (CYLDEL)

Cover
- ☐ Metal cover (MC)

Arm
- ☐ Hold Open Arm (H)
- ☐ Fusible Link Arm, 165ºF (FL)

Finish
- ☐ Custom powder coat (RAL) _____ (handed metal cover required)
- ☐ Plated finish _____ (handed metal cover required)
- ☐ SRI primer (use with powder coat finishes only)

Screw pack
- ☐ Through bolt[1] self reaming and tapping screws (TBSRT)
- ☐ Wood and machine screws (WMS)
- ☐ Through bolt[1] wood and machine screws (TBWMS)
- ☐ Torx machine screws (TORX)
- ☐ Through bolt[1] and torx machine screws (TBTRX)

Installation accessories
- ☐ Plate, 4020-18
- ☐ Plate, 4020-18G

Special template
- ☐ ST- _____

1. Specify door thickness if other than 1 3/4".

Table of sizes

- Select closer based on width of door
- The spring power of non-sized 4021 cylinder is adjustable from size 1 through size 5 and is shipped set to size 3
- Sized 4020 Series cylinders available in size 6
- Delay action not available with 4026 cylinder

Exterior (and vestibule) door width

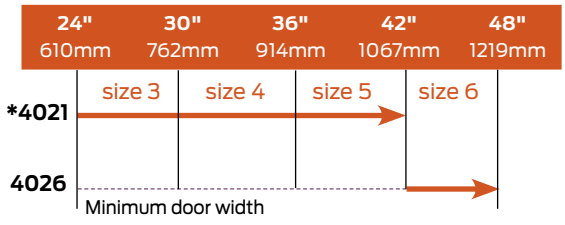

Interior door width

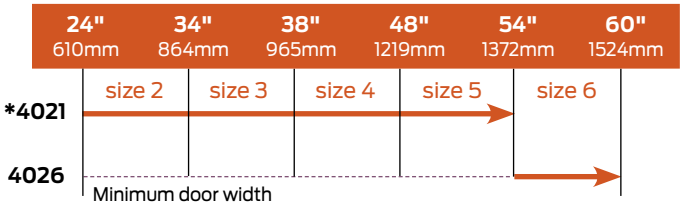

→ Indicates recommended range of door width for closer size.
* Adjustable Size 1 thru 5.

Reduced opening force 4020 Series closers

CAUTION! Any manual door closer, including those certified by BHMA to conform to ANSI Standard A156.4, that is selected, installed and adjusted based on ADA or other reduced opening force requirements may not provide sufficient power to reliably close and latch a door.

Refer to Automatic Operators catalog for information on systems that meet reduced opening force requirements without effecting closing power.

Door width	36"	42"	48"
8.5* lbs.	4021	4021	4021
5.0* lbs.	4021	4021	4021

* Maximum opening force.

4020T Series



The 4020T is a cast iron, heavy duty closer designed for interior, high traffic conditions. This Grade 1 device comes in various finishes and colors to match your interior look.

Features

Certifications	Grade 1 - ANSI A156.4, UL 10C, ADA, 100 hour salt spray, meets BAA - Buy American Act
Body construction	▪ Cast iron body ▪ Full complement bearing ▪ 1 1/2" diameter piston ▪ 11/16" diameter double heat treated pinion journal
Fluid	All weather fluid
Handing	Handed
Templating	Peel-n-Stick templates - 2 1/2" x 6" mounting hole pattern
Size	Sized 1, 3 or 4
Warranty	30 years

Cover	▪ Plastic cover (PC), standard ▪ Metal cover (MC), optional
Fasteners	Self reaming and tapping screws (SRT)
Mounting	Top jamb (Pull side)
Arms	Standard arm, track with roller
Finishes/colors/ powder coat	▪ 622 Matte black ▪ 689 Aluminum ▪ 690 Statuary bronze ▪ 691 Light bronze ▪ 693 Black ▪ 695 Dark bronze ▪ 696 Brass ▪ Custom colors optional ▪ Optional SRI primer - powder coat only ▪ Optional plated finishes

Special templates | Customized installation templates or products may be available to solve non-standard applications. Contact LCN Product Support for assistance.

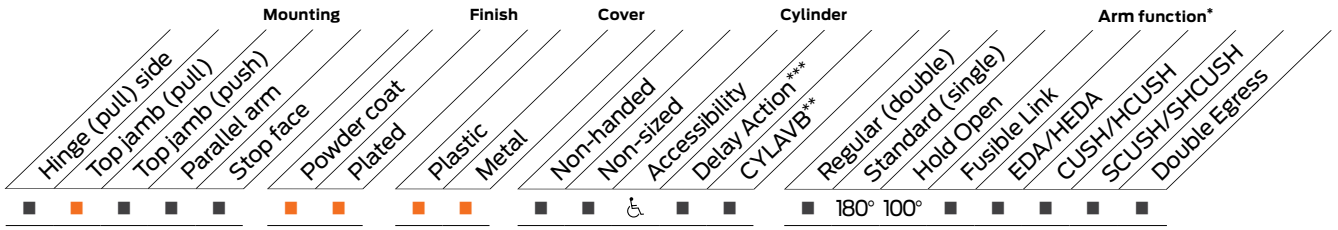

■ Available
■ Not available

♿ Closer available with less than 5.0 lbs. opening force on 36" door.
* Maximum opening/hold open point with standard template.
** Advanced Variable Back Check.
*** Delay action for 4040XP incorporates standard 4041 cylinder.

Mounting details

Top jamb (pull) side mounting

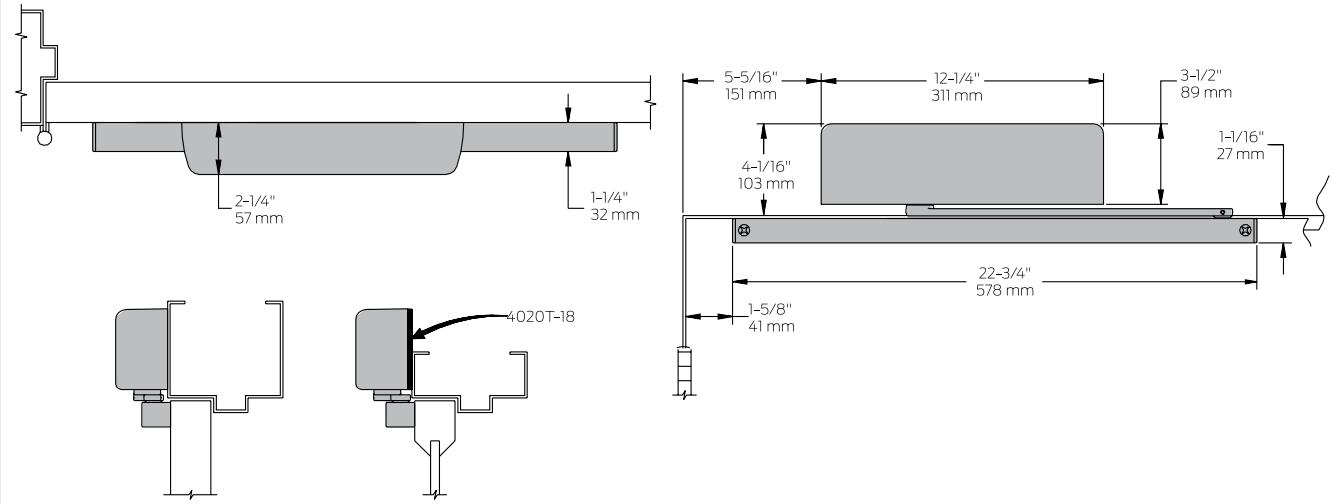

Butt hinges	Should not exceed 5" (127 mm) in width
Auxiliary stop	Recommended at hold open point or where a door cannot swing 180°
Reveal	Should not exceed 1/8" (3 mm)
Head frame	Less than 3 7/8" (98 mm), requires plate, 4020T-18; plate requires 1 3/4" (44 mm) minimum
Clearance	1 1/2" (38 mm) behind door required for 90° or 180° installation
Maximum opening	▪ Templating allows 180° with standard track arm, limited to 100° with optional bumper installed ▪ Consult factory if door will be held open at 180° ▪ Variable hold open angles with infinite options

Note: Optional track bumper assembly assists back check in cushioning the opening swing of the door. It is not intended to replace an auxiliary stop.

Accessories

Cylinders

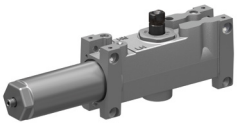

4021T(3)(4)-3071
Cast iron cylinder assembly (CYL)
- Handed
- Standard

Covers

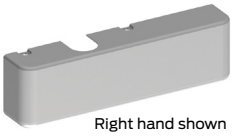

Right hand shown

4020T-72
Plastic Cover (PC)
- Handed
- Standard

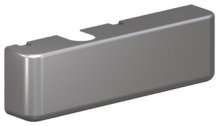

Right hand shown

4020T-72MC
Metal Cover (MC)
- Handed
- Required for plated finishes and custom powder coat finishes
- Optional

Arms



4020T-3077T
Standard Arm (STDTRKARM)
- Handed
- Roller not included with arm

Tracks



4020T-3038
Standard Track (STDTRK)
- Non-handed
- Non hold open
- Will accept hold open clip and/or bumper assembly
- Standard



4020T-3038B
Track with Bumper (BUMP)
- Non-handed
- Non hold open
- With bumper assembly installed
- Will accept hold open clip
- Optional



4020T-3038H
Hold Open Track (H)
- Non-handed
- With hold open clip installed
- Will accept bumper assembly
- Optional



4020T-3038HB
Hold Open Track with Bumper (HBMP)
- Non-handed
- With hold open clip and bumper assembly installed
- Optional

Installation accessories



4020T-18
Plate
- Required where head frame is less than 3 7/8" (98 mm)
- Requires minimum 1 3/4" (44 mm) frame face



4020T-169
Track bumper
- Mounts in track to assist back check, does not replace auxiliary stop
- Limits maximum opening
- Consists of bumper, bumper post, and mounting screw



4020T-3054
Hold open clip
- Mounts in track to provide hold open function
- Hold open point controlled by clip location
- Consists of clip and mounting screws
- Requires 4020T-3034H Track Roller



4020T-3034
Track roller
- Quiet, low friction roller assembly
- Shoulder dimension "X" = 1/16" (2mm)



4020T-3034H
Track roller
- Quiet, low friction roller assembly
- Shoulder dimension "X" = 1/16" (2mm)
- Spring-loaded hold-open mechanism

Ordering information

How-to-order 4020T Series closers

1. Select cylinder size
- ☐ 4021T (ADA)
- ☐ 4023T
- ☐ 4024T

2. Specify hand
- ☐ Right Hand (RH)
- ☐ Left Hand (LH)

3. Select finish
- ☐ Standard powder coat _____
  Matte Black (622), Aluminum (689), Dark Bronze (695), Statuary Bronze (690), Light Bronze (691), Black (693), or Brass (696)

Closer will be shipped with:
- Standard cylinder
- Standard cover
- Standard arm
- Track roller
- Standard track
- Self-reaming and tapping screws
  (unless options listed below are selected)

Closer options

Cover
- ☐ Metal cover (MC)

Track
- ☐ Track with Bumper (BUMP)
- ☐ Hold Open Track (H)
- ☐ Hold Open Track with Bumper (HBMP)

Finish
- ☐ Custom powder coat (RAL) _____
  (handed metal cover required)
- ☐ Plated finish _____
  (handed metal cover required)
- ☐ SRI primer (use with powder coat finishes only)

Screw pack
- ☐ Through bolt[1] and self reaming and tapping screws (TBSRT)
- ☐ Wood and machine screws (WMS)
- ☐ Through bolt[1] wood and machine screws (TBWMS)
- ☐ Torx machine screws (TORX)
- ☐ Through bolt[1] and torx machine screws (TBTRX)

Installation accessories
- ☐ Plate, 4010T-18

Special template
- ☐ ST- _____

1. Specify door thickness if other than 1 3/4".

Table of sizes

- Select closer based on width of door
- Sized 4020T Series cylinders available in size 1, 3 or 4
- Specify next higher size closer where strong drafts exist

Interior door width

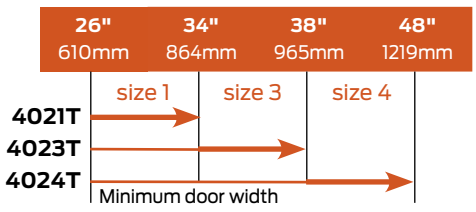

→ Indicates recommended range of door width for closer size.

4030 Series



The 4030 is a cast iron, universal closer designed specifically for doors in moderate traffic conditions. This versatile closer compliments the rest of the heavy duty 4000 Series and offers the choice of three mountings and multiple arm options.

Features

Certifications	Grade 1 - ANSI A156.4, UL 10C, ADA, 100 hour salt spray, meets BAA - Buy American Act
Body construction	▪ Cast iron body ▪ Full complement bearing ▪ 1 1/8" diameter piston ▪ 1/2" diameter single heat treated pinion journal
Fluid	All weather fluid
Handing	Non-handed
Templating	Peel-n-Stick templates - 1 23/32" x 6 17/64" mounting hole pattern
Size	Adjustable spring size 1-4
Warranty	30 years

Cover	Metal Cover (MC), standard
Fasteners	Self reaming and tapping screws (SRT)
Mounting	Hinge (pull side), top jamb (push side), parallel arm (push side)
Arms	Regular arm
Finishes/colors/ powder coat	▪ 622 Matte black ▪ 689 Aluminum ▪ 690 Statuary bronze ▪ 691 Light bronze ▪ 693 Black ▪ 695 Dark bronze ▪ 696 Brass ▪ Custom colors optional ▪ Optional SRI primer - powder coat only ▪ Optional plated finishes

Special templates | Customized installation templates or products may be available to solve non-standard applications. Contact LCN Product Support for assistance.

Mounting					Finish		Cover		Cylinder			Arm function*								
Hinge (pull) side	Top jamb (pull)	Top jamb (push)	Parallel arm	Stop face	Powder coat	Plated	Plastic	Metal	Non-handed	Non-sized	Accessibility	Delay Action***	CYLAVB**	Regular (double)	Standard (single)	Hold Open	Fusible Link	EDA/HEDA	CUSH/HCUSH	SCUSH/SHCUSH	Double Egress
■	■	■	■	■	■	■	■	■	■	■	♿	■	■	180°	■	180°	■	110°	100°	100°	■

■ Available
■ Not available

♿ Closer available with less than 5.0 lbs. opening force on 36" door.
* Maximum opening/hold open point with standard template.
** Advanced Variable Back Check.
*** Delay action for 4040XP incorporates standard 4041 cylinder.

Mounting details

Hinge (pull) side mounting

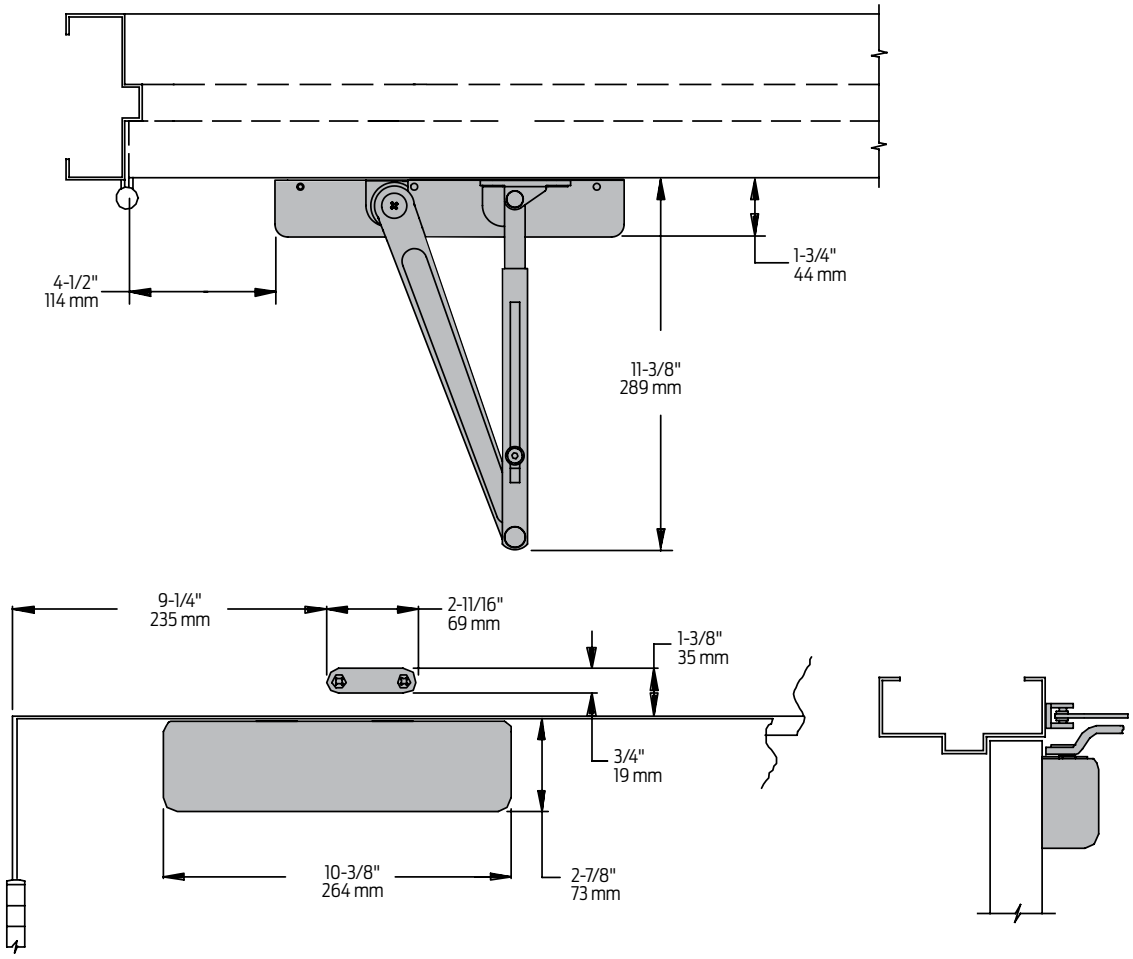

Butt hinges	Should not exceed 5" (127 mm) in width
Auxiliary stop	Recommended at hold open point or where a door cannot swing 180°
Reveal	Should not exceed 3/16" (5 mm) for regular arm or 3/16" (5 mm) for Hold Open Arm
Top rail	Requires 2 7/8" (73 mm) minimum
Clearance	1 3/4" (44 mm), behind door required for installation
Maximum opening	▪ Can be templated for 180° ▪ Hold open points up to maximum opening with Hold Open Arm

Mounting details

Top jamb (push) side mounting

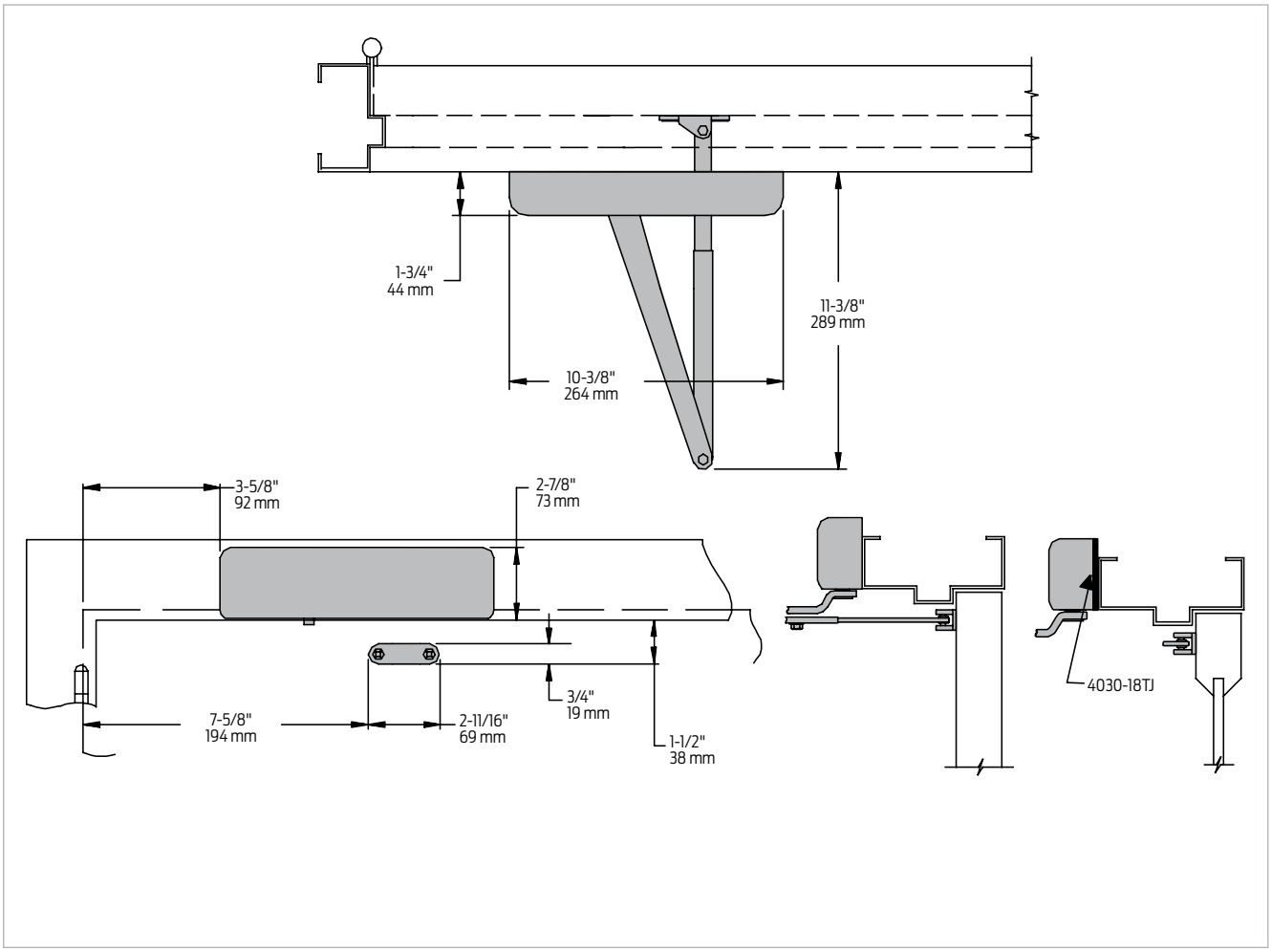

Butt hinges	Should not exceed 5" (127 mm) in width
Auxiliary stop	Recommended at hold open point or where the door cannot swing 180°
Reveal	▪ Up to 3 1/2" (89 mm) allows 180° opening ▪ Up to 7 1/2" (191 mm) with long arm allows for 140° opening
Top rail	Requires 1 1/2" (38 mm) minimum from stop
Head frame	▪ Less than 2 1/4" (57 mm) requires plate, 4030-18TJ ▪ Plate requires 1 1/2" (38 mm) minimum
Maximum opening	▪ Can be templated for 180° ▪ Hold open points up to maximum opening with Hold Open Arm (H)

Mounting details

Parallel arm (push side) and EDA mounting

Parallel arm mount

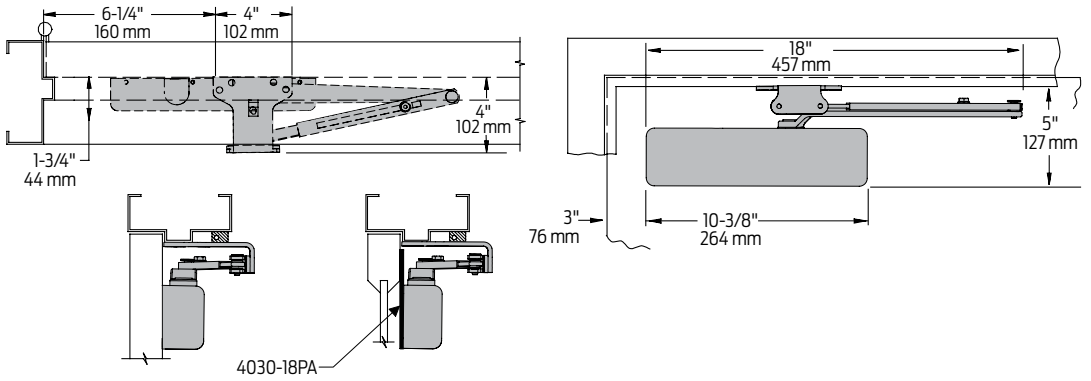

EDA mount

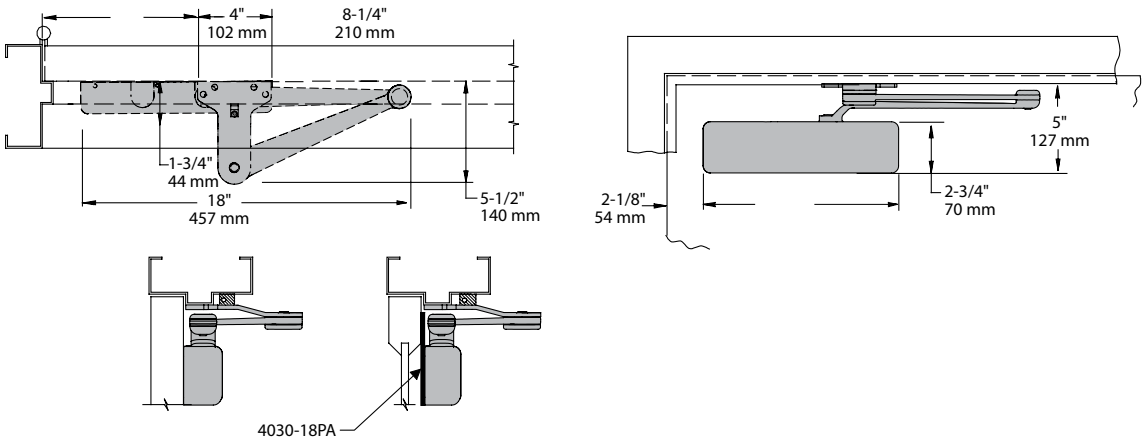

Butt hinges	Should not exceed 5" (127 mm) in width
Auxiliary stop	Recommended at hold open point or where a door cannot swing maximum opening
Clearance	▪ For 4030-62PA shoe is 4" (102 mm) from door face ▪ EDA arm is 5 1/2" (140 mm) from door face
Top rail	▪ Less than 5" (127 mm) measured from the stop requires plate 4030-18PA ▪ Plate requires 1 3/4" (44 mm) minimum
Stop width	Minimum 1" (25 mm)
Head frame	Flush or single rabetted requires PA shoe adapter, 4030-419
Blade stop	Clearance, requires 1/2" (13 mm) blade stop spacer, 4030-61
Auxiliary shoe	▪ 4030-62A allows installation of regular arm with overhead holder/stop ▪ Special templating required
EDA arm	Requires shoe support, 4030-30 for fifth screw anchorage where reveal is less than 3 1/16" (78 mm)
Maximum opening	▪ Regular or Hold Open Arms can be templated for 180° ▪ EDA template allows 110° maximum opening ▪ Hold open points up to maximum opening with Hold Open Arm (H)

Notes:
- 4030 closers ordered with EDA arms include 4030-201 fifth hole spacer to support the shoe
- Regular or Hold Open Arm mounting requires PA shoe, 4030-62PA for Regular or Hold Open Arms; Add prefix "P" to closer description (eg. P4031.)
- P4031 closer includes 4030-201 fifth hole spacer to support PA shoe

Mounting details

CUSH and Spring CUSH mounting

CUSH mount

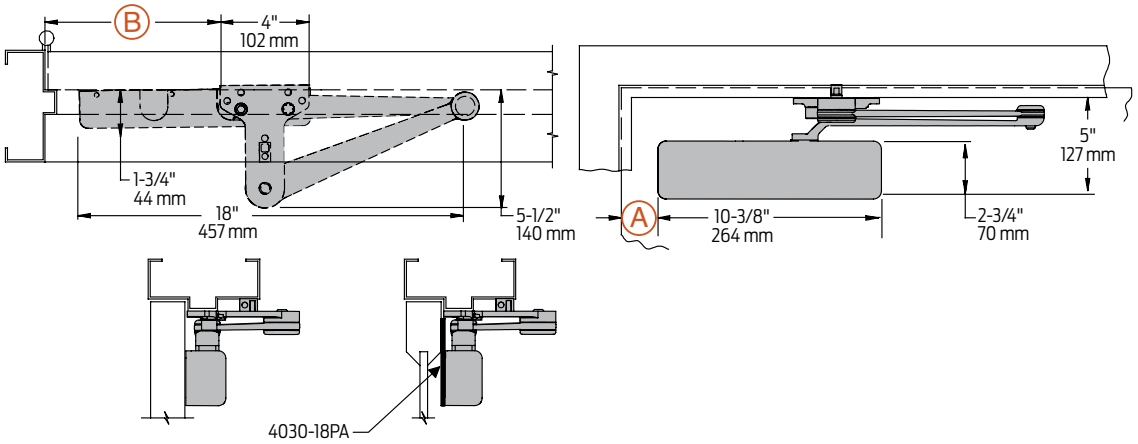

Spring CUSH mount

Spring CUSH dead stop points are approximately 5° greater than templated stop point.

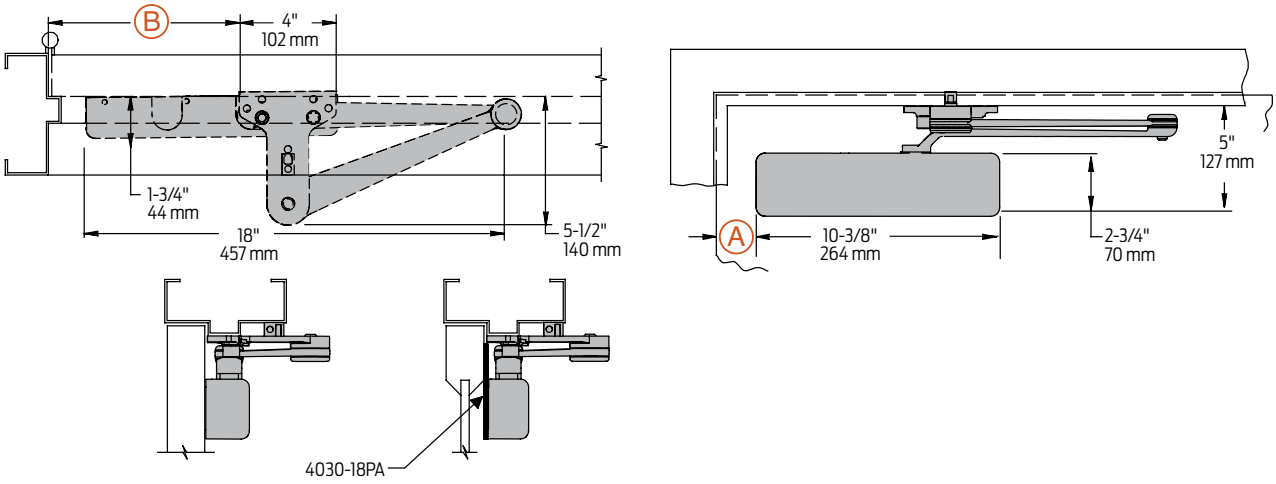

Clearance	For CUSH or SCUSH shoe is 5 1/2" (140 mm) from door face					
Head frame	Flush or rabetted requires CUSH flush panel adapter, 4030-419					
CUSH or SCUSH Arm	Requires shoe support, 4030-30 for fifth screw anchorage where reveal is less than 3 1/16" (78 mm)					
Maximum opening	CUSH and SCUSH arms can be templated for maximum opening/hold open point at:					
	85°:	A = 3 5/8 (92 mm) B = 9 3/4" (248 mm)	90°:	A = 3" (76 mm) B = 9 1/8" (232 mm)	100°[1]:	A = 1 7/8" (48 mm) B = 8" (203 mm)

1. 100° mounting will not work with swing clear hinges.

Note: 4031 closers ordered with CUSH or SCUSH arms include 4030-201 fifth hole spacer to support the shoe.

Accessories

Cylinders

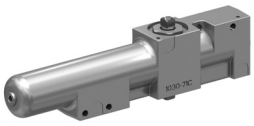

4031-3071
Cast iron cylinder assembly (CYL)
- Non-handed
- Standard

Covers



4030-72MC
Metal Cover (MC)
- Non-handed

Arms



4030-3077
Regular Arm (REGARM)
- Non-handed
- Mounts hinge side or top jamb
- P4031 closer includes PA shoe, 4030-62PA is required for parallel arm mounting



4030-3077LD
Light Duty Arm (LD)
- Non-handed
- Mounts hinge side, top jamb or parallel arm (62PA required)
- Optional



4030-3077L
Long Arm (LONG)
- Non-handed
- Includes long rod and shoe, 4030-79LR for top jamb mount with deep reveals
- Optional



4030-3049
Hold Open Arm (H)
- Non-handed
- Mounts hinge side, top jamb or parallel arm (62PA required)
- Hold open adjustable at shoe
- Optional



4030-3049L
Hold Open Long Arm (HLONG)
- Non-handed
- Includes long head and tube, 4030-3048L for top jamb mount with deep reveals
- Optional



4030-3077EDA
Extra Duty Arm (EDA)
- Non-handed
- Extra duty arm features solid forged steel main and forearm for potentially abusive installations
- Optional



4030-3049EDA
Hold Open Extra Duty Arm (HEDA)
- Handed
- Arm, provides hold open function adjustable at shoe
- Optional



4030-3077CNS
Cush-n-Stop Arm (CUSH)
- Non-handed
- Solid forged steel main arm and forearm with stop in soffit shoe
- Optional



4030-3049CNS
Hold Open Cush-n-Stop Arm (HCUSH)
- Non-handed
- Provides hold open function with templated stop/hold open points
- Handle controls hold open function
- Optional



4030-3077SCNS
Spring Cush-n-Stop Arm (SCUSH)
- Non-handed
- For abusive applications
- Features solid forged steel main arm and forearm with spring loaded stop in the soffit shoe
- Optional



4030-3049SCNS
Spring Hold Open Cush-n-Stop Arm (SHCUSH)
- Non-handed
- For abusive applications
- Features solid forged steel main arm and forearm with spring loaded stop in the soffit shoe
- Handle controls hold open function
- Optional

Accessories

Installation accessories



4030-18TJ
Plate
- Required for top jamb mounting where head frame is less than 2 1/4" (57 mm) or flush ceiling condition exists
- Requires 1 1/2" (38 mm) minimum



4030-18PA
Plate
- Required for parallel arm mounting where top rail is less than 5" (127 mm), measured from the stop
- Rrequires 1 3/4" (44 mm) minimum



4030-30
CUSH shoe support
- Provides anchorage for fifth screw used with CUSH arms where reveal is less than 3 1/16" (78 mm)



4030-61
Blade stop spacer
- Lowers parallel arm shoe to clear 1/2" (13 mm) blade stop



4030-62A
Auxiliary shoe
- Requires a top rail of 7" (178 mm)
- Replaces -62PA for parallel arm mounting of regular arm with some overhead holder/stop
- Optional



4030-419
PA flush panel adapter
- Provides horizontal mounting surface for PA or CUSH shoe on single rabetted or flush frame



4030-62PA
PA shoe
- Required for parallel arm mounting

Ordering information

How-to-order 4030 Series closers

1. Select finish

☐ Standard powder coat _____
Matte Black (622), Aluminum (689), Dark Bronze (695), Statuary Bronze (690), Light Bronze (691), Black (693), or Brass (696)

Closer will be shipped with:
- Standard cylinder
- Standard metal cover
- Regular arm
- Wood and self tapping machine screw pack
(unless options listed below are selected)

Closer options

Finish
- ☐ Custom powder coat (RAL) _____
- ☐ Plated finish _____
- ☐ SRI primer (use with powder coat finishes only)

Arm
- ☐ Regular Arm with Parallel Arm Bracket (RWPA)
- ☐ Regular Arm with 62A Auxiliary Shoe (RW62A)
- ☐ Long Arm (LONG)
- ☐ Hold Open Arm (H)
- ☐ Hold Open with Parallel Arm Bracket (HWPA)
- ☐ Hold Open Long Arm (HLONG)
- ☐ Light Duty Arm (LD)
- ☐ Light Duty Arm with Auxiliary Shoe (LD62A)
- ☐ Light Duty Arm with Parallel Arm Shoe (LDPA)
- ☐ Light Duty Long Arm (LDL)
- ☐ Extra Duty Arm (EDA)
- ☐ Hold Open Extra Duty Arm (HEDA)
(specify right or left hand)
- ☐ Cush-n-Stop Arm (CUSH)
- ☐ Hold Open Cush-n-Stop Arm (HCUSH)
- ☐ Spring Cush-n-Stop Arm (SCUSH)
- ☐ Spring Hold Open Cush-n-Stop Arm (SHCUSH)

Optional screw packs
- ☐ Through bolt[1] wood and machine screws (TBWMS)

Installation accessories
- ☐ Plate, 4030-18TJ
- ☐ Plate, 4030-18PA
- ☐ CUSH shoe support, 4030-30
- ☐ Blade stop spacer, 4030-61
- ☐ Auxiliary shoe, 4030-62A
- ☐ PA flush panel adapter, 4030-419

Special template
- ☐ ST- _____

1. Specify door thickness if other than 1 3/4".

Table of sizes

- Non-sized 4031 cylinder is adjustable from sizes 1 to4 and is shipped set to size 3

Exterior (and vestibule) door width

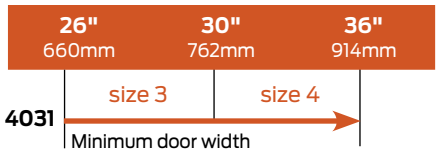

Interior door width

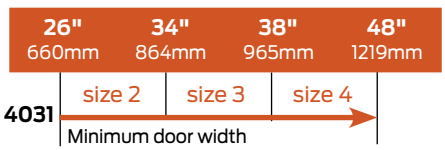

→ Indicates recommended range of door width for closer size.

Reduced opening force 4030 Series closers

CAUTION! Any manual door closer, including those certified by BHMA to conform to ANSI Standard A156.4, that is selected, installed and adjusted based on ADA or other reduced opening force requirements may not provide sufficient power to reliably close and latch a door.

Refer to Automatic Operators catalog for information on systems that meet reduced opening force requirements without effecting closing power.

Door width	36"	42"	48"
8.5* lbs.	4031	4031	4031
5.0* lbs.	4031	4031	4031

* Maximum opening force.

4030T Series



The 4030T is a single lever (track) arm, surface mounted closer designed for interior use on narrow head frames and top rails. The choice of three mountings and ease of installation offer a versatile solution to door control in moderate traffic applications. The 4030T compliments the heavy duty 4000 Series.

Features

Certifications	Grade 1 - ANSI A156.4, UL 10C, ADA, 100 hour salt spray, meets BAA - Buy American Act
Body construction	▪ Cast iron body ▪ Full complement bearing ▪ 1 1/8" diameter piston ▪ 1/2" diameter single heat treated pinion journal
Fluid	All weather fluid
Handing	Non-handed
Size	Adjustable spring size 1-3
Warranty	30 years

Cover	Metal cover (MC), standard
Fasteners	Wood and machine screws (WMS)
Mounting	Pull side on door, pull side on frame and push side on door
Arms	Standard arm and track
Finishes/colors/ powder coat	▪ 622 Matte black ▪ 689 Aluminum ▪ 690 Statuary bronze ▪ 691 Light bronze ▪ 693 Black ▪ 695 Dark bronze ▪ 696 Brass ▪ Custom colors optional ▪ Optional SRI primer - powder coat only ▪ Optional plated finishes

Special templates | Customized installation templates or products may be available to solve non-standard applications. Contact LCN Product Support for assistance.

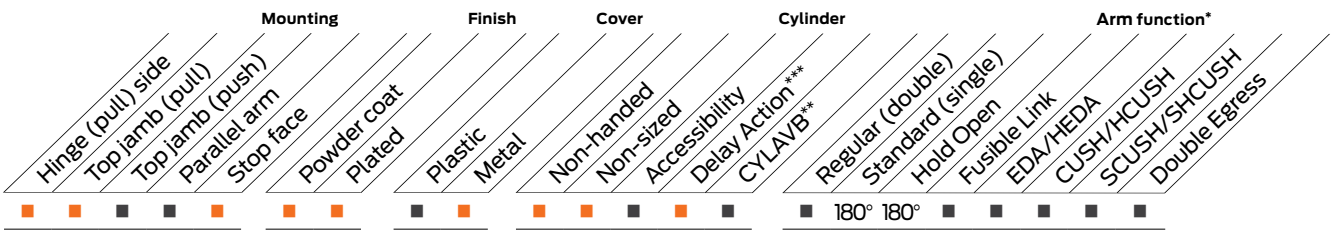

■ Available
■ Not available

* Maximum opening/hold open point with standard template.
** Advanced Variable Back Check.
*** Delay action for 4040XP incorporates standard 4041 cylinder.

Mounting details

Hinge (pull) side mounting

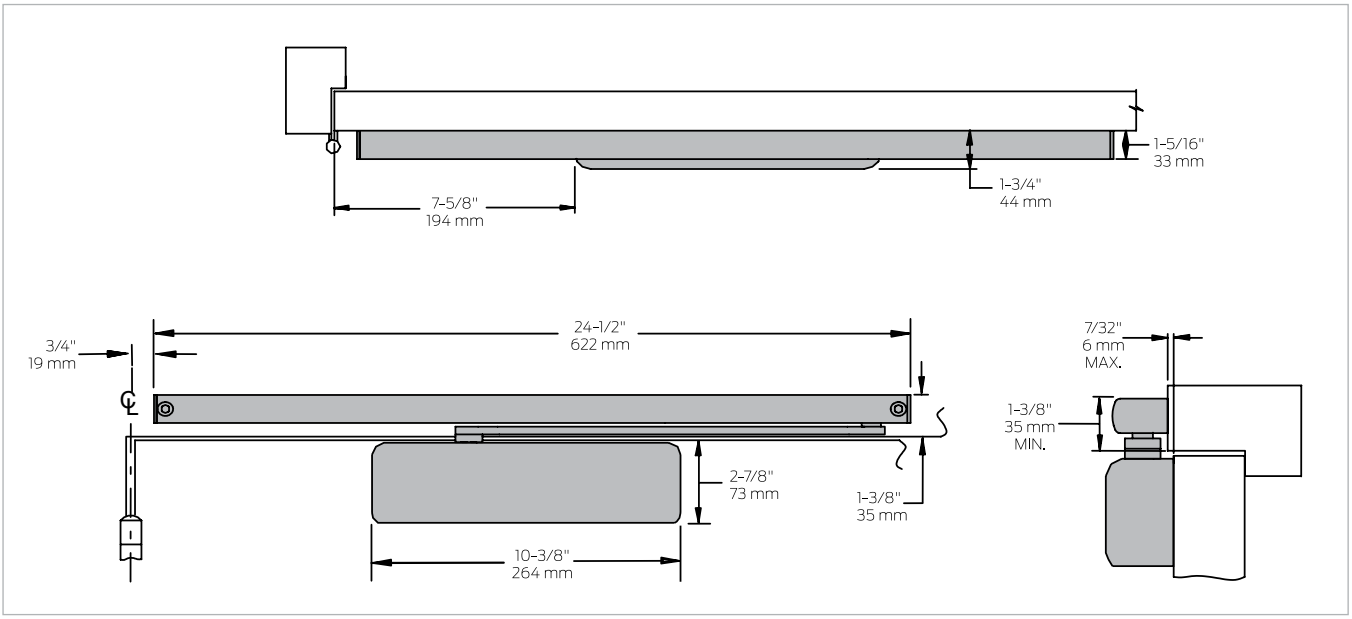

Butt hinges	Should not exceed 5" (127 mm) in width
Auxiliary stop	Recommended at hold open point or where a door cannot swing 180°
Reveal	Should not exceed 7/32" (6 mm)
Top rail	Requires 2 7/8" (73 mm) minimum
Clearance	1 3/4" (44 mm), behind door required for installation
Maximum opening	▪ Can be templated for 180° ▪ Consult factory if door will be held open at 180° ▪ Hold open points up to maximum opening point with hold open option

Mounting details

Top jamb (pull) side mounting

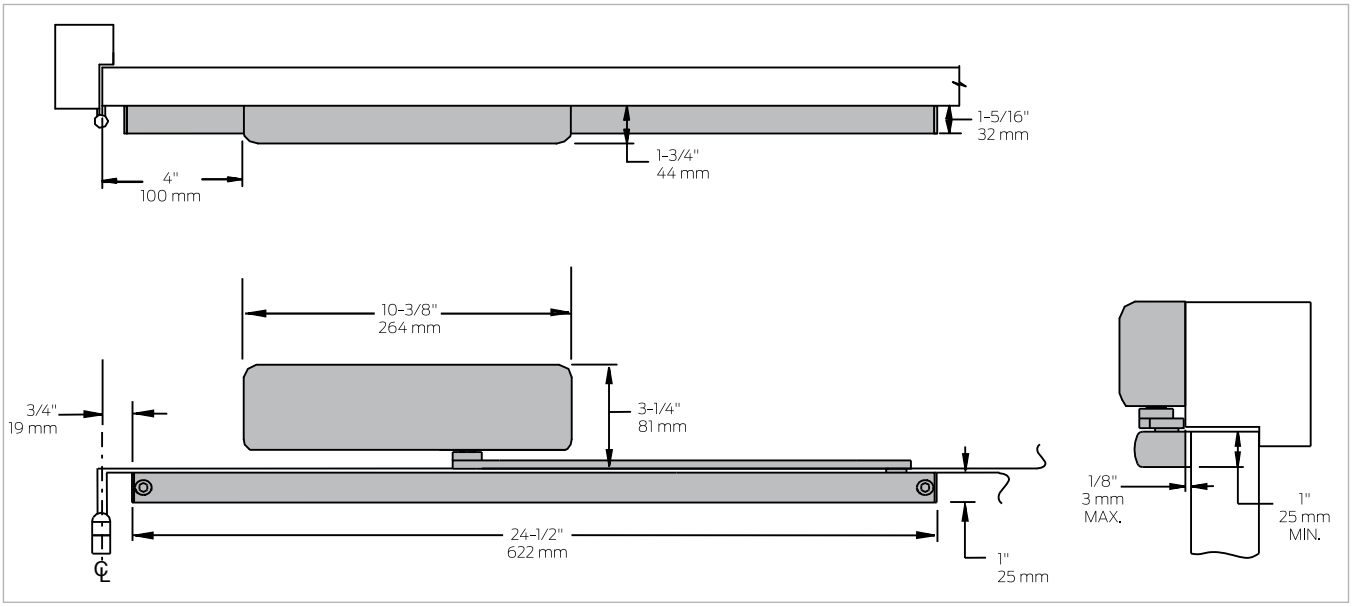

Butt hinges	Should not exceed 5" (127 mm) in width
Auxiliary stop	Recommended at hold open point or where the door cannot swing 180°
Reveal	Should not exceed 1/8" (3 mm)
Top rail	Requires 1" (25 mm) minimum
Head frame	Requires 2 7/8" (73 mm) minimum
Maximum opening	▪ Can be templated for 180° ▪ Consult factory if door will be held open at 180° ▪ Hold open points up to maximum opening point with hold open option

Mounting details

Stop face (push) side mounting

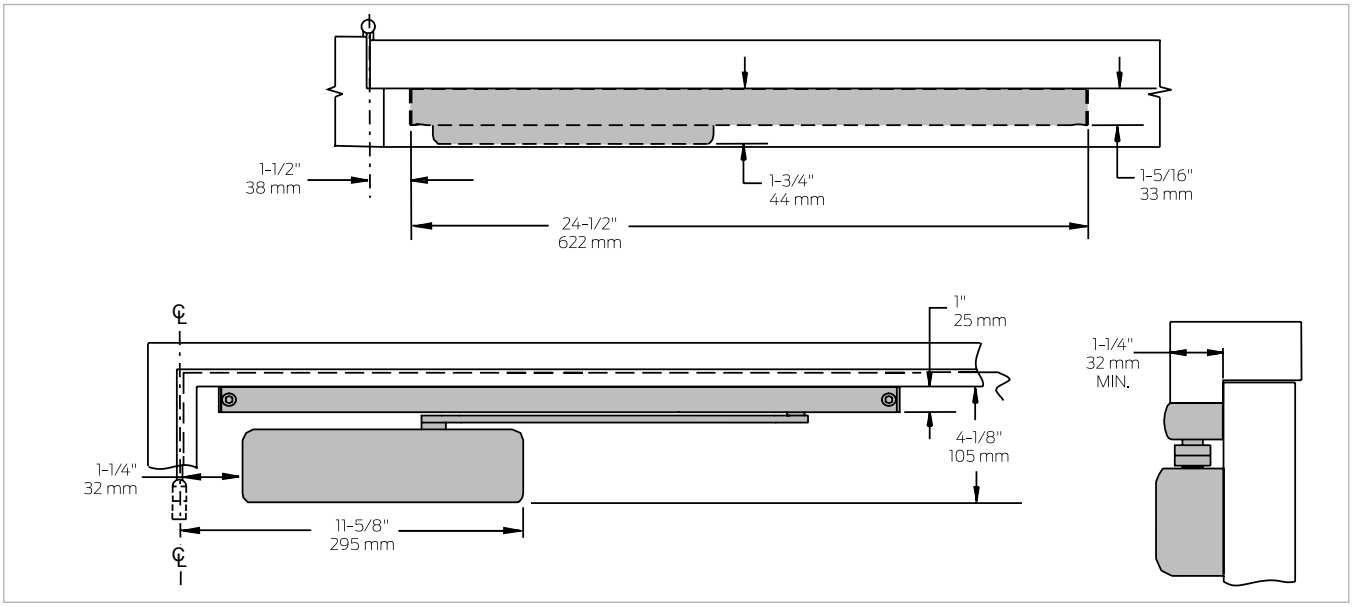

Butt hinges	Should not exceed 5" (127 mm) in width
Auxiliary stop	Recommended at hold open point or where a door cannot swing 110°
Reveal	Should not exceed 1 3/4" (44 mm)
Top rail	Requires 4 1/8" (105 mm) minimum measured from the stop
Head frame	Minimum 1 1/4" (32 mm)
Maximum opening	▪ Can be templated for 110° ▪ Hold open points up to maximum opening with hold open option

Note: Consult factory for applications where door must swing 180°.

Accessories

Cylinders



4031T-3071
Cast iron cylinder assembly (CYL)
- Non-handed
- Standard

Covers



4030T-72MC
Metal Cover (MC)
- Non-handed

Arms



4030T-3077T
Standard Arm (STDTRKARM)
- Non-handed
- Single lever mounts hinge side, top jamb or stop face
- Track roller included

Tracks



4030T-3038
Standard Track (STDTRK)
- Non-handed
- Non hold open track mounts on either side of the door
- Will accept hold open clip
- Standard



4030T-3038H
Hold Open Track (H)
- Non-handed
- Hold open track mounts on either side of the door
- Comes with 4030T-3054 hold open clip
- Optional

Installation accessories

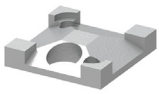

4030T-3054
Hold-open clip
- Mounts in track to provide hold open function
- Hold open point controlled by clip location
- Requires 4030T-3034H

Ordering information

How-to-order 4030T Series closers

1. Select finish

☐ Standard powder coat _____
Matte Black (622), Aluminum (689), Dark Bronze (695), Statuary Bronze (690), Light Bronze (691), Black (693), or Brass (696)

Closer will be shipped with:

- Standard cylinder
- Standard metal cover
- Standard track
- Standard arm
- Track roller
- Wood and self tapping machine screw pack
  (unless options listed below are selected)

Closer options

Finish

☐ Custom powder coat (RAL) _____
☐ Plated finish _____
☐ SRI primer (use with powder coat finishes only)

Track

☐ Hold Open Arm (H)

Optional screw packs

☐ Through bolt[1] wood and machine screws (TBWMS)
☐ Hold open wood and machine screws (HWMS)
☐ Hold open through bolt wood and machine screws (HTBWMS)

1. Specify door thickness if other than 1 3/4".

Table of sizes

- Non-sized 4031T Series cylinder is adjustable from sizes 1 to 3 and is shipped set to size 3

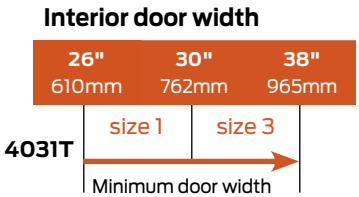

→ Indicates recommended range of door width for closer size.

4040XP Series



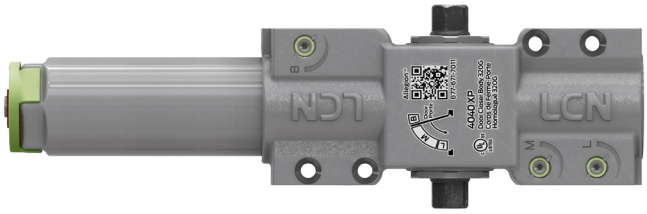

The 4040XP Series is LCN's most popular door closer—and for good reason. This durable non-handed, surface-mounted heavy-duty closer, is designed for the most demanding high-use-and-abuse applications as well as for easy installation and maintenance.

Features

Certifications	Grade 1 - ANSI A156.4, UL 10C, ADA, 100 hour salt spray, meets BAA - Buy American Act
Body construction	▪ Patented positive stop ▪ Patented regulation valve indicators ▪ Independent speed adjustments ▪ QR code for instructions and support ▪ Cast iron body ▪ Full complement bearing ▪ 1 ½" diameter piston ▪ Double heat treated pinion journal
Fluid	All weather liquid X fluid
Handing	Non-handed
Templating	Peel-n-Stick templates - 2 ¼" x 5" mounting hole pattern
Size	Adjustable spring size 1-6, includes LCN Green Dial
Warranty	30 years

Cover	▪ Redesigned snap-fit plastic cover (PC) with improved retention fit, standard ▪ Metal cover (MC), optional
Fasteners	Self reaming and tapping screws (SRT)
Mounting	Hinge (pull side), top jamb (push side), parallel arm (push side)
Arms	Regular arm
Finishes/colors/ powder coat	▪ 622 Matte black ▪ 689 Aluminum ▪ 690 Statuary bronze ▪ 691 Light bronze ▪ 693 Black ▪ 695 Dark bronze ▪ 696 Brass ▪ Custom colors optional ▪ Optional SRI primer - powder coat only ▪ Optional plated finishes

Special templates | Customized installation templates or products may be available to solve non-standard applications. Contact LCN Product Support for assistance.

Mounting						Finish		Cover		Cylinder			Arm function*							
Hinge (pull) side	Top jamb (pull)	Top jamb (push)	Parallel arm	Stop face	Powder coat	Plated	Plastic	Metal	Non-handed	Non-sized	Accessibility	Delay Action***	CYLAVB**	Regular (double)	Standard (single)	Hold Open	Fusible Link	EDA/HEDA	CUSH/HCUSH	SCUSH/SHCUSH	Double Egress
■	■	■	■	■	■	■	■	■	■	■	♿	■	■	120°	■	120°	■	180°	110°	110°	■

■ Available
■ Not available

♿ Closer available with less than 5.0 lbs. opening force on 36" door.
* Maximum opening/hold open point with standard template.
** Advanced Variable Back Check.
*** Delay feature incorporates standard 4040 cylinder (not XP).

Adjustments

There are several design features that make installation or adjustment of the 4040XP easier and more intuitive.

- **LCN Green Dial** provides a visual reference of the spring power setting, taking the guesswork out of spring power adjustments.
- **Additional adjustments** can be made to the back check, main, and latch regulation valves which are labeled for easy identification.
  - Labels correspond to a diagram with door swing zones located on the closer body.
- **Patented positive stop feature** on all regulation valves. The improved staking feature prevents the screw from being backed out and causing accidental damage to the product.
  - The patented regulation valve indicators provide visual color indicators of how far a screw is backed out—the more visible the component, the faster the speed.
  - This makes adjustments simpler and more intuitive.
- **New QR code** that provides on-the-spot access to interactive installation and maintenance instructions and tech support.

Mounting details

Hinge (pull) side mounting

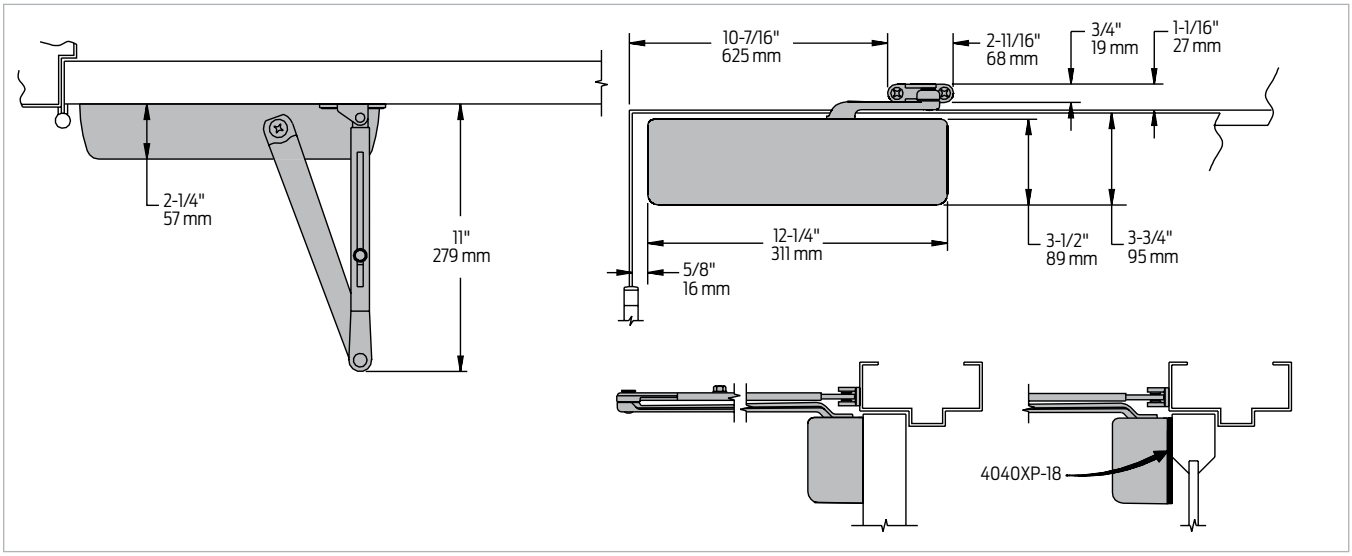

Butt hinges	Should not exceed 5" (127 mm) in width
Auxiliary stop	Recommended at hold open point or where a door cannot swing beyond 120°
Reveal	Should not exceed 3/4" (19 mm) for Regular or Hold Open Arm
Top rail	Less than 3 3/4" (95 mm) requires plate, 4040XP-18; plate requires 2" (51 mm) minimum
Clearance	2 3/8" (60 mm) behind door required for 90° installation
Delay action	▪ Incorporates standard 4041 cylinder ▪ Delays closing from 120° to 70° ▪ Delay time adjustable up to approximately 1 minute
Maximum opening	▪ Templating allows up to 120° ▪ Hold open points 90° up to 120° with Hold Open Arm

Mounting details

Top jamb (push) side mounting

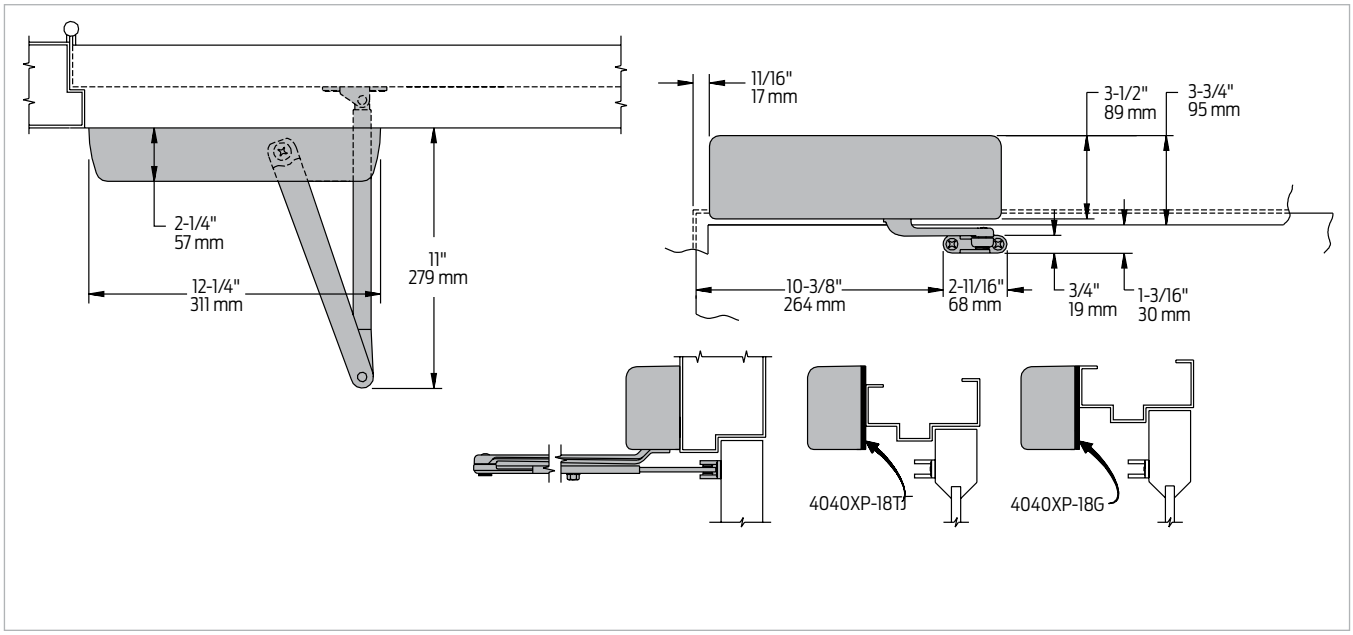

Butt hinges	Should not exceed 5" (127 mm) in width		
Auxiliary stop	Recommended at hold open point or where a door cannot swing beyond 120°		
Reveal	Arm type	Reveal	Max opening
	Regular Arm	2 9/16"	Up to 120°
	Long Arm	4 13/16"	Up to 120°
	X Long Arm	4 13/16" up to 8"	Up to 120°
	Hold Open Arm	2 9/16"	Up to 120°
	Hold Open Long Arm	4 13/16"	Up to 120°
Top rail	▪ Requires 1 1/4" (32 mm) minimum ▪ 2 1/4" (57 mm) minimum with closer on plate, 4040XP-18TJ ▪ 3" (76 mm) minimum with closer on plate, 4040XP-18G		
Head frame	▪ Less than 3 1/2" (89 mm) requires plate, 4040XP-18TJ ▪ With flush ceiling, use plate, 4040XP-18G. Either plate requires 1 3/4" (44 mm) minimum		
Maximum opening	▪ Templating allows up to 120° ▪ Hold open points 85° up to 120° with Hold Open Arm		
Delay action	▪ Incorporates standard 4041 cylinder ▪ Delays closing from 120° to 70° ▪ Delay time adjustable up to approximately 1 minute		

Mounting details

Parallel arm (push) side mounting

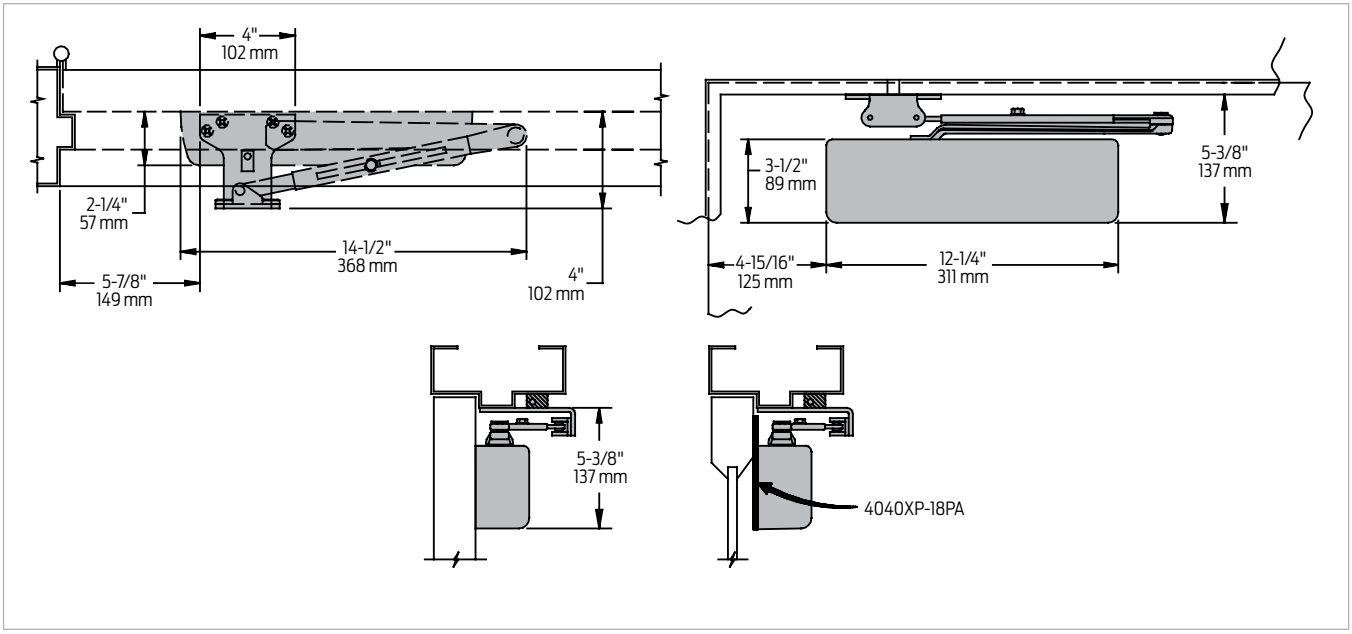

Butt hinges	Should not exceed 5" (127 mm) in width
Auxiliary stop	Recommended at hold open point, where the door cannot swing 180°, or where Cush-n-Stop Arm is not used
Reveal	Should not exceed 7/32" (6 mm)
Top rail	Less than 5 3/8" (137 mm) measured from the stop requires plate, 4040XP-18PA; plate requires 2" (51 mm) minimum from the stop
Head frame	Flush or rabetted requires PA shoe adapter, 4040XP-419
Stop width	Minimum 1" (25 mm); CUSH arm requires minimum 1 1/2" (38 mm)
Blade stop	Clearance requires 1/2" (13mm) blade stop spacer, 4040XP-61
Clearance	▪ 4040XP-62PA shoe is 4" (102 mm) from door face ▪ EDA shoe projects 5 1/2" (140 mm) from door face ▪ CUSH shoe projects 6" (152 mm) from door face
Delay action	▪ Incorporates standard 4041 cylinder, without XP cylinder ▪ Delays closing from 120° to 70° ▪ Delay time adjustable up to approximately 1 minute
Maximum opening	▪ 180° opening/hold open points with all except CUSH arms ▪ 110° opening/hold open with CUSH arms

Notes:
- Optional mounting requires PA shoe, 4040XP-62PA for regular or Hold Open Arms
- Add prefix "P" to closer description (eg. P4040XP)
- P4040XP closer includes 4040XP-201 fifth hole spacer to support PA shoe

Mounting details

EDA and CUSH mounting

EDA mount

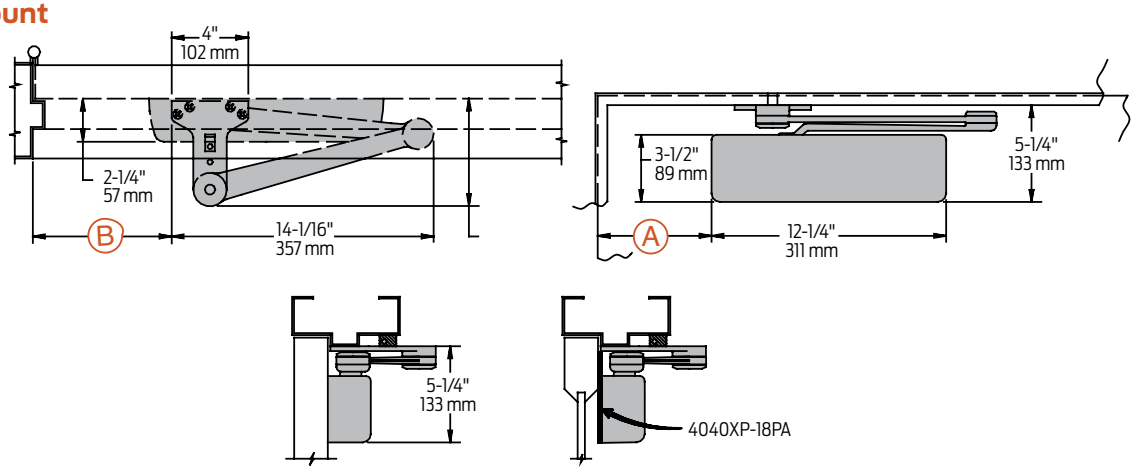

CUSH mount

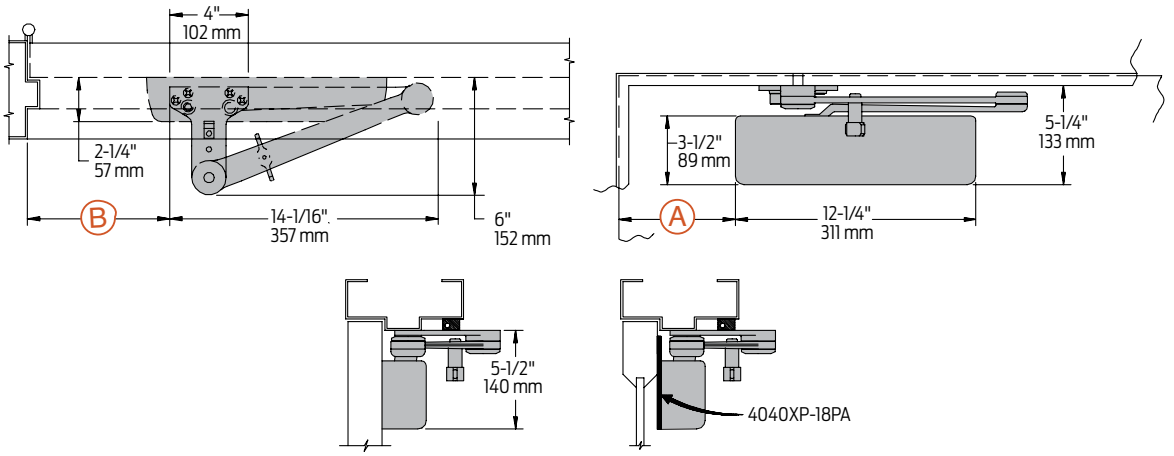

Clearance	4040XP-62EDA is 5 1/2" (140 mm) from door face; 6" (152 mm) for CUSH	
Head frame	Flush or rabetted requires CUSH flush panel adapter, 4040XP-419	
CUSH Arm	Requires shoe support, 4040XP-30 for fifth screw anchorage where reveal is less than 3 1/16" (78 mm)	
Delay action	▪ Incorporates standard 4041 cylinder, without XP cylinder ▪ Delays closing from maximum opening to; 115° with 180° template, 95° with 110° template, 85° with 100° template, 75° with 90° template (delay time adjustable up to approximately 1 minute)	
Maximum opening	EDA arm can be templated for points at:	CUSH arms can be templated for opening/hold open point at:
	110°: A = 6 3/8" (162 mm) B = 7 3/4" (197 mm)	85°: A = 7 15/16" (202 mm) B = 9 1/8" (232 mm)
	or 180°: A = 2 7/8" (73 mm) B = 4 1/4" (108 mm)	90°: A = 7 3/16" (183 mm) B = 8 1/2" (216 mm)
	Hold open points up to maximum opening with HEDA arm	100°: A = 6 1/16" (154 mm) B = 7 1/4" (184 mm)
		or 110°: A = 5 1/16" (129 mm) B = 6 3/8" (162 mm)

Notes:
- 4040XP Series closers ordered with EDA or CUSH arms include 4040XP-201 fifth hole spacer to support the shoe
- SCUSH stop points are approximately 5° more than templated stop point
- Hold open at templated stop points

Accessories

Cylinders



4040XP-3071
Cast iron cylinder assembly (CYL)
- Non-handed
- Heavy duty

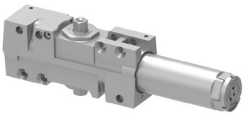

4041-3071 DEL
Delay Action Cylinder (CYLDEL)
- Used for delayed action closing
- Non-handed
- Heavy duty

Covers

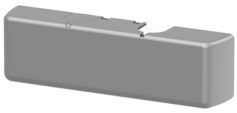

4040XP-72
plastic cover (PC)
- Non-handed
- Includes 4040XP-54 snap-on cover clip
- Redesigned patented snap-fit cover with improved retention fit

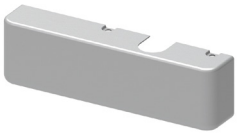

4040XP-72MC
metal cover (MC)
- Handed
- Required for plated finishes and custom powder coat finishes
- Optional

Arms



4040XP-3077
Regular Arm (REGARM)
- Non-handed
- Mounts pull side or top jamb with shallow reveal P4041 closer includes PA shoe, 4040XP-62PA required for parallel arm mounting



4040XP-3077L
Long Arm (LONG)
- Non-handed
- Includes long rod and shoe, 4040XP-79LR for top jamb mount
- Optional



4040XP-3077ELR
Extra Long Arm (XLONG)
- Non-handed
- Includes extra long rod and shoe, 4040XP-79ELR for top jamb mount with deep reveal
- Optional



4040XP-3049
Hold Open Arm (H)
- Non-handed
- Mounts pull side or top jamb with shallow reveal, hold open adjustable shoe
- 4040XP closer includes 4040XP-62PA shoe required for parallel arm mounting
- Optional



4040XP-3049L
Hold Open Long Arm (HLONG)
- Non-handed
- Includes long head and tube, 4040XP-3048L for top jamb mount
- Optional



4040XP-3077EDA
Extra Duty Arm (EDA)
- Non-handed
- Features forged, solid steel main and forearm for potentially abusive installations
- Optional



4040XP-3049EDA
Hold Open Extra Duty Arm (HEDA)
- Handed
- Parallel arm features forged, solid steel main and forearm for potentially abusive installations
- Hold open function is adjusted at the shoe
- Optional



4040XP-3077EDA/62G
Extra Duty Arm with 62G Thick Hub Shoe (EDAW62G)
- Non-handed
- Features forged, solid steel main and forearm for potentially abusive installations
- 62G shoe provides additional blade stop clearance
- Optional



4040XP-3049EDA/62G
Hold Open Extra Duty arm with 62G Thick Hub Shoe (HEDA62G)
- Handed
- Features forged, solid steel main and forearm for potentially abusive installations
- 62G shoe provides additional blade stop clearance; hold open function is adjusted at the shoe
- Optional



4040XP-3077CNS
Cush-n-Stop Arm (CUSH)
- Non-handed
- Features solid forged steel main arm and forearm with stop in soffit shoe.
- Optional



4040XP-3049CNS
Hold Open Cush-n-Stop Arm (HCUSH)
- Non-handed
- Hold open function with templated stop/hold open points
- Handle controls hold open function
- Optional

Accessories

Arms (cont.)



4040XP-3077SCNS
Spring Cush-n-Stop Arm (SCUSH)
- Non-handed
- For potentially abusive applications features solid forged steel main arm and forearm with spring loaded stop in the soffit shoe
- Optional



4040XP-3049SCNS
Spring Hold Open Cush-n-Stop Arm (SHCUSH)
- Non-handed
- For potentially abusive applications features solid forged steel main arm and forearm with spring loaded stop in the soffit shoe
- Handle controls hold open function
- Optional

Installation accessories



4040XP-18
Plate
- Required for hinge side mount where top rail is less than 3 3/4" (95 mm)
- Requires minimum 2" (51 mm) minimum top rail



4040XP-18G
Plate
- Locates top jamb mounted closer flush with top of head frame face in flush ceiling condition
- Requires 1 3/4" (44 mm) minimum head frame



4040XP-18TJ
Plate
- Centers top jamb mounted closer vertically on head frame where face is less than 3 1/2" (89 mm). Plate requires 1 3/4" (44 mm) minimum head frame

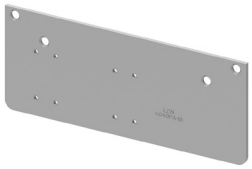

4040XP-18PA
Plate
- Required for parallel arm mounting where top rail is less than 5 1/2" (140 mm), measured from the stop
- Requires 2" (51 mm) minimum top rail



4040XP-62PA
PA shoe
- Required for parallel arm mounting



4040XP-30
CUSH shoe support
- Provides anchorage for fifth screw used with CUSH arms, where reveal is less than 3 1/16" (78 mm)
- Optional

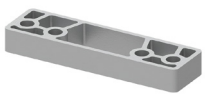

4040XP-61
Blade stop spacer
- Required to lower parallel arm shoe to clear 1/2" (13 mm) blade stop
- Optional



4040XP-419
PA flush panel adapter
- Provides horizontal mounting surface for parallel arm shoe on single rabbeted or flush frame
- Optional



4040XP-62A
Auxiliary shoe
- Requires a top rail of 7" (178 mm)
- Shoe replaces -62PA for parallel arm mounting of regular arm with overhead holder/stop
- Optional



4040XP-54
Snap-on cover clip
- Used to secure 4040XP-72 plastic cover to cylinder body

Ordering information

How-to-order 4040XP Series closers

1. Select finish

☐ Standard powder coat _____
Matte Black (622), Aluminum (689), Dark Bronze (695), Statuary Bronze (690), Light Bronze (691), Black (693), or Brass (696)

Closer will be shipped with:
- Standard cylinder
- Standard cover
- Regular arm
- Self reaming and tapping screws
(unless options listed below are selected)

Closer options

Cylinder
☐ Delay action cylinder (CYLDEL)

Cover
☐ Metal (specify right or left hand)(MC)

Finish
☐ Custom powder coat (RAL) _____
(handed metal cover required)
☐ Plated finish, US _____
(handed metal cover required)
☐ SRI primer
(use with powder coat finishes only)

Arm
☐ Regular Arm (REGARM)
☐ Regular Arm with Parallel Arm Bracket (RWPA)
☐ Regular Arm with 62A Auxiliary Shoe (RW62A)
☐ Long Arm (LONG)
☐ Extra Long Arm (XLONG)
☐ Hold Open Arm (H)
☐ Hold Open with Parallel Arm Bracket (HWPA)
☐ Hold Open Long Arm (HLONG)
☐ Extra Duty Arm (EDA)
☐ Extra Duty Arm with 62G Thick Hub Shoe (EDAW62G)
☐ Hold Open Extra Duty Arm (HEDA)
☐ Cush-n-Stop Arm (CUSH)
☐ Hold Open Cush-n-Stop Arm (HCUSH)
☐ Spring Cush-n-Stop Arm (SCUSH)
☐ Spring Hold Open Cush-n-Stop Arm (SHCUSH)

Optional screw packs
☐ Through bolt[1] self reaming and tapping screws (TBSRT)
☐ Wood and machine screws (WMS)
☐ Through bolt[1] wood and machine screws (TBWMS)
☐ Torx machine screws (TORX)
☐ Through bolt[1] and torx machine screws (TBTRX)

Installation accessories
☐ Plate, 4040XP-18
☐ Plate, 4040XP-18TJ
☐ Plate, 4040XP-18G
☐ Plate, 4030-18PA
☐ CUSH shoe support, 4040XP-30
☐ Blade stop spacer, 4040XP-61
☐ Auxiliary shoe, 4040XP-62A
☐ PA flush panel adapter, 4040XP-419

Special template
☐ ST- _____

1. Specify door thickness if other than 1 3/4".

Table of sizes

- 4040XP cylinders are adjustable from size 1 through size 6 and is shipped set to size 3
- Closing power of 4040XP Series closers may be adjusted 50%

Exterior (and vestibule) door width

24" 610mm	30" 762mm	36" 914mm	42" 1067mm	48" 1219mm
*4040XP	size 3	size 4	size 5	size 6

Minimum door width

Interior door width

24" 610mm	30" 762mm	38" 965mm	48" 1219mm	54" 1372mm	60" 1524mm
*4040XP	size 2	size 3	size 4	size 5	size 6

Minimum door width

→ Indicates recommended range of door width for closer size.
* Adjustable Size 1 thru 5.

Reduced opening force 4040XP Series closers

CAUTION! Any manual door closer, including those certified by BHMA to conform to ANSI Standard A156.4, that is selected, installed and adjusted based on ADA or other reduced opening force requirements may not provide sufficient power to reliably close and latch a door.

Refer to Automatic Operators catalog for information on systems that meet reduced opening force requirements without effecting closing power.

Door width	36"	42"	48"
8.5* lbs.	4040XP	4040XP	4040XP
5.0* lbs.	4040XP	4040XP	4040XP

* Maximum opening force.

4040XPT Series



The 4040XPT is a Grade 1 device featuring a cast iron body and Liquid X Fluid ideal for pull or push side placement in high traffic applications. Its high-quality construction provides for reliable performance.

Features

Certifications	Grade 1 - ANSI A156.4, UL 10C, ADA, 100 hour salt spray, meets BAA - Buy American Act
Body construction	▪ Cast iron body ▪ Full complement bearing ▪ 1 ½" diameter piston ▪ Double heat treated pinion journal
Fluid	All weather liquid X fluid
Handing	Non-handed
Size	Adjustable spring size 1-4
Warranty	30 years

Cover	▪ Redesigned snap-fit plastic cover (PC) with improved retention fit, standard ▪ Metal cover (MC), optional
Fasteners	Self reaming and tapping screws (SRT)
Mounting	Pull side on door, pull side top jamb, push side on door
Arms	Standard arm and track with roller
Finishes/colors/ powder coat	▪ 622 Matte black ▪ 689 Aluminum ▪ 690 Statuary bronze ▪ 691 Light bronze ▪ 693 Black ▪ 695 Dark bronze ▪ 696 Brass ▪ Custom colors optional ▪ Optional SRI primer - powder coat only ▪ Optional plated finishes

Special templates | Customized installation templates or products may be available to solve non-standard applications. Contact LCN Product Support for assistance.

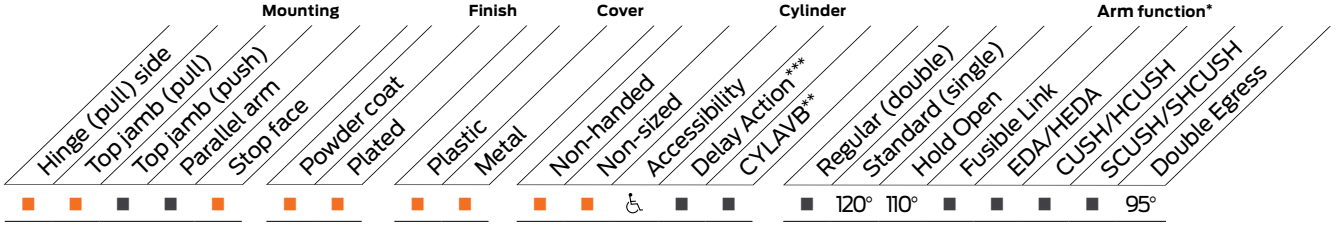

■ Available
■ Not available

♿ Closer available with less than 5.0 lbs. opening force on 36" door.
* Maximum opening/hold open point with standard template.
** Advanced Variable Back Check.
*** Delay feature incorporates standard 4040 cylinder (not XP).

Mounting details

Hinge (pull) side mounting

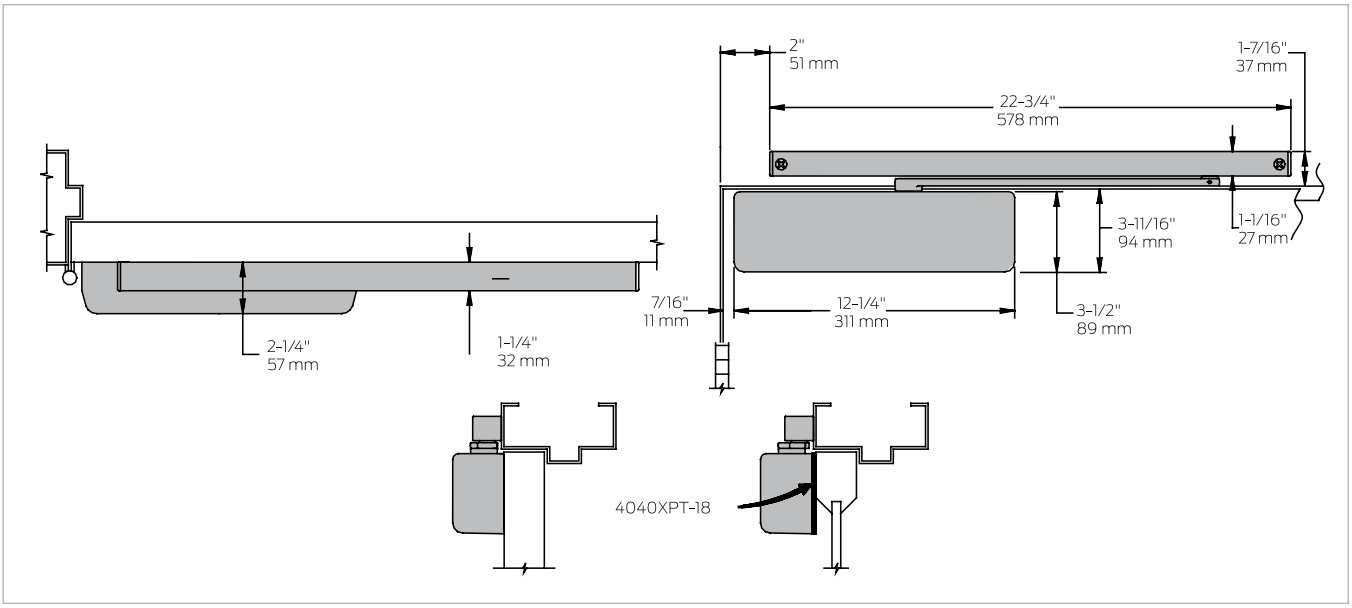

Butt hinges	Should not exceed 5" (127 mm) in width
Auxiliary stop	▪ Recommended at hold open point or where a door cannot swing 120° ▪ Optional track bumper assembly assists back check in cushioning the opening swing of the door ▪ Track bumper is not intended to replace an auxiliary stop
Reveal	Should not exceed 1/8" (3 mm) for standard arm
Top rail	Less than 3 3/4" (95 mm) requires plate, 4040XPT-18. Plate requires 1 13/16" (44 mm) minimum.
Head frame	Requires 1 1/4" (32 mm) minimum
Clearance	2 1/4" (57 mm) behind door required for 90° installation
Maximum opening	▪ Templating allows 120° with standard arm, limited to 110° when optional bumper is installed ▪ Variable hold open angles with infinite options

Note: Consult factory for applications where door must swing 180°.

Mounting details

Top jamb (pull) side mounting

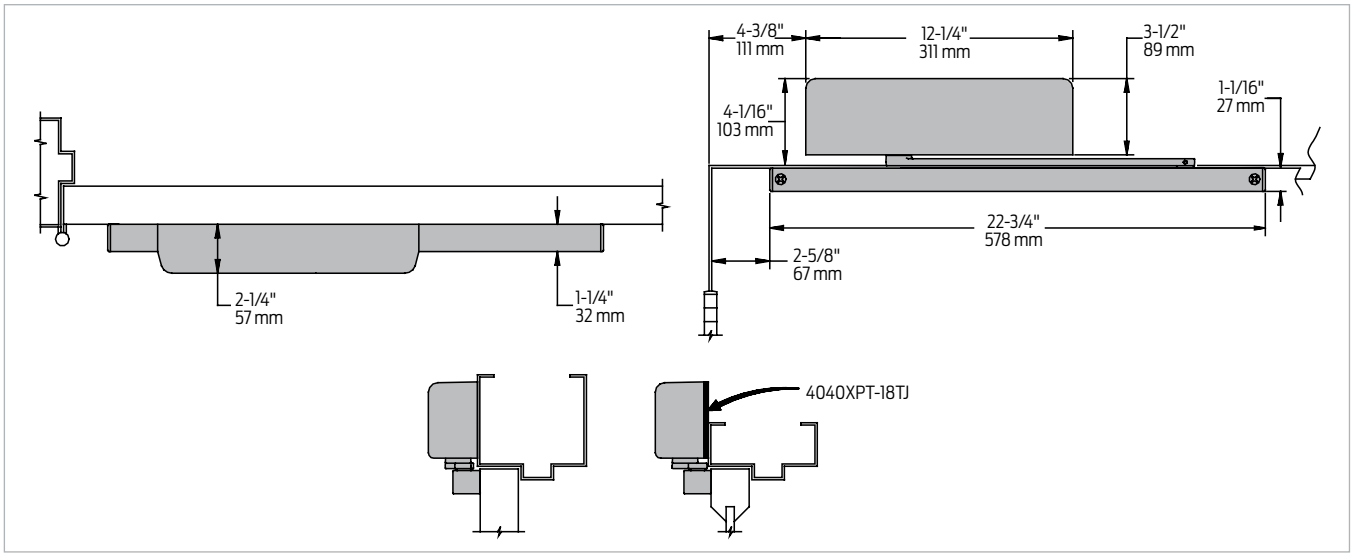

Butt hinges	Should not exceed 5" (127 mm) in width
Auxiliary stop	▪ Recommended at hold open point or where a door cannot swing 180° ▪ Optional track bumper assembly assists back check in cushioning the opening swing of the door ▪ It is not intended to replace an auxiliary stop
Reveal	Should not exceed 1/8" (3 mm)
Head frame	Less than 3 7/8" (98 mm), requires plate, 4040XPT-18TJ. Plate requires 1 3/4" (44 mm) minimum.
Clearance	1 1/4" (32 mm) behind door required for 180° installation
Maximum opening	▪ Templating allows 180° with standard track arm, limited to 110° with optional bumper installed ▪ Consult factory if door will be held open at 180° ▪ Variable hold open angles with infinite options

Note: Consult factory for applications where an exterior or large/heavy door must swing 180°

Mounting details

Stop face (push) side mounting

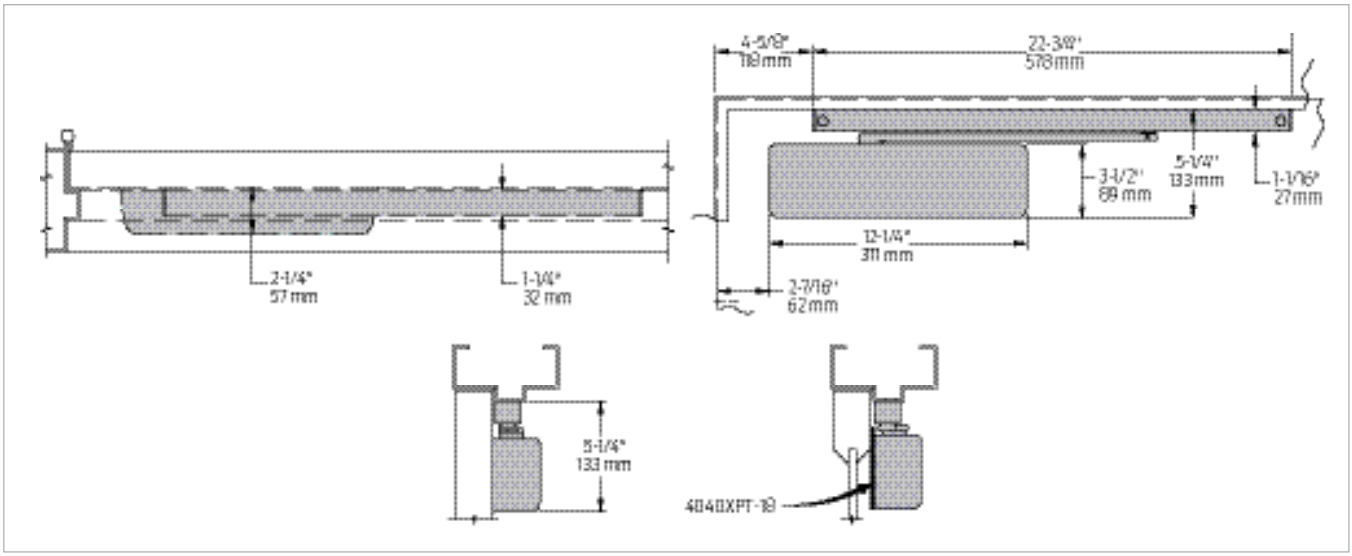

Butt hinges	Should not exceed 5" (127 mm) in width
Auxiliary stop	▪ Recommended at hold open point or where a door cannot swing 120° ▪ Optional track bumper assembly assists back check in cushioning the opening swing of the door ▪ It is not intended to replace an auxiliary stop
Clearance	Projects 2 1/4" (57 mm) from face of door
Top rail	▪ Less than 5 1/4" (133 mm) measured from the stop, requires plate, 4040XPT-18 ▪ Plate requires 3 1/2" (89 mm) minimum
Stop width	Minimum 1 1/4" (32 mm)
Maximum opening	▪ Templating allows 120° with standard track arm, limited to 110° with optional bumper tracks ▪ Variable hold open angles with infinite options

Note: Consult factory for applications where door must swing 180°.

Accessories

Cylinders



4040XPT-3071
Cast iron cylinder assembly (CYL)
- Non-handed
- Standard

Covers

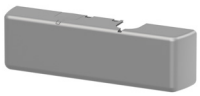

4040XPT-72
Plastic Cover (PC)
- Non-handed
- Snap-on
- Standard

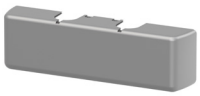

4040XPT-72MC
Metal Cover (MC)
- Handed
- Required for plated finishes and custom powder coat finishes
- Optional

Arms



4040XPT-3077T
Standard Arm (STDTRKARM)
- Non-handed
- Arm does not include track roller



4040XPT-3077DE
Double Egress Arm (DE)
- Handed
- For double egress doors and frames
- Does not include track roller
- Maximum reveal is 2 11/16" (68mm)
- Optional

Tracks



4040XPT-3038
Standard Track (STDTRK)
- Non-handed
- Non hold open
- Will accept hold open clip and/or bumper assembly
- Standard



4040XPT-3038B
Track with Bumper (BUMP)
- Non-handed
- Non hold open
- Will accept hold open clip
- Optional



4040XPT-3038H
Hold Open Track (H)
- Non-handed
- With hold open clip installed
- Will accept bumper assembly
- Optional



4040XPT-3038HB
Hold Open Track with Bumper (HBMP)
- Non-handed
- With hold open clip and bumper assembly installed
- Optional

Installation accessories



4040XPT-18
Plate
- Required for pull side (door mount) installations where top rail is less than 3 3/4" (95 mm)
  - Requires minimum 1 3/4" (44 mm) top rail
- Required for push side (door mount) installations where top rail is less than 5 1/4" (133 mm) measured from the stop
  - Requires minimum 3 1/2" (89 mm) top rail



4040XPT-18TJ
Plate
- Required for pull side top jamb installations where head frame is less than 3 7/8" (98 mm)
- Requires minimum 1 3/4" (44 mm) head frame



4040XPT-169
Track bumper
- Mounts in track to assist back check, does not replace auxiliary stop
- Limits maximum opening. Consists of bumper, bumper post, and mounting screw



4040XPT-3054
Hold open clip
- Mounts in track to provide hold-open function
- Hold open point controlled by clip location
- Consists of clip and mounting screws
- Requires 4040XPT-3034H hold open track roller



4040XPT-3034
Track roller
- Quiet, low friction roller assembly
- Shoulder dimension "X" = 1/8" (3mm)



4040XPT-3034H
Hold open track roller
- Quiet, low friction roller assembly
- Shoulder dimension "X" = 1/8" (3mm)

Ordering information

How-to-order 4040XPT Series closers

1. Select finish

☐ Standard powder coat _____
Matte Black (622), Aluminum (689), Dark Bronze (695), Statuary Bronze (690), Light Bronze (691), Black (693), or Brass (696)

Closer will be shipped with:
- Standard cylinder
- Standard cover
- Standard arm
- Track roller
- Standard track
- Self reaming and tapping screws
  (unless options listed below are selected)

Closer options

Cover
☐ Metal cover (MC)

Finish
☐ Custom powder coat (RAL) _____
(handed metal cover required)
☐ Plated finish, US _____
(handed metal cover required)
☐ SRI primer (use with powder coat finishes only)

Track
☐ Track with Bumper (BUMP)
☐ Hold Open Track (H)
☐ Hold Open Track with Bumper (HBMP)

Screw pack
☐ Through bolt[1] self reaming and tapping screws (TBSRT)
☐ Wood and machine screws (WMS)
☐ Through bolt[1] wood and machine screws (TBWMS)
☐ Torx machine screws (TORX)
☐ Through bolt[1] and torx machine screws (TBTRX)

Installation accessories
☐ Plate, 4040XPT-18
☐ Plate, 4040XPT-18TJ

Special template
☐ ST- _____

1. Specify door thickness if other than 1 3/4".

Table of sizes

- Non-sized 4040XPT Series cylinder is adjustable from sizes 1 through 4 and is shipped set to size 3

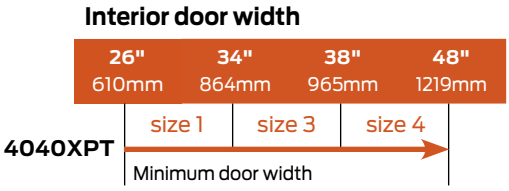

→ Indicates recommended range of door width for closer size.

Reduced opening force 4040XPT Series closers

CAUTION! Any manual door closer, including those certified by BHMA to conform to ANSI Standard A156.4, that is selected, installed and adjusted based on ADA or other reduced opening force requirements may not provide sufficient power to reliably close and latch a door.

Refer to Automatic Operators catalog for information on systems that meet reduced opening force requirements without effecting closing power.

Door width	36"	42"	48"
8.5* lbs.	N/A	N/A	N/A
5.0* lbs.	4040XPT	4040XPT	4040XPT

* Maximum opening force.

4050A Series

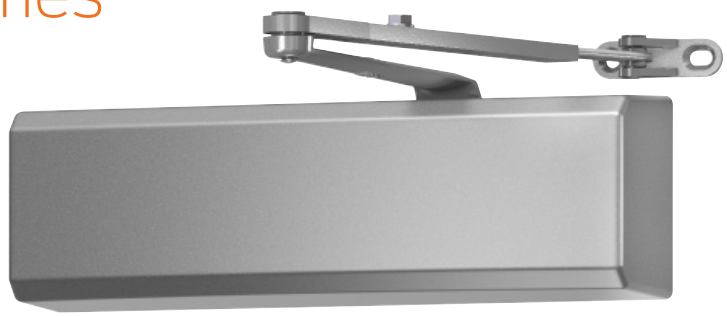

The 4050A Series cast aluminum closer is engineered for durability and built tough to excel in the harsh environments of high frequency, high abusive traffic areas. Featuring the most common commercial footprint, it is ideal for commercial building applications that demand a combination of quality, reliability and value.

Features

Certifications	Grade 1 - ANSI A156.4, UL 10C, ADA, 100 hour salt spray, meets BAA - Buy American Act
Body construction	▪ Cast aluminum body ▪ Full complement bearing ▪ 1 1/2" diameter piston ▪ 11/16" diameter double heat treated pinion journal
Fluid	All weather liquid X fluid
Handing	Non-handed
Templating	2 3/8" x 6 3/4" mounting hole pattern
Size	Adjustable spring size 1-6
Warranty	25 years

Cover	▪ Plastic cover (PC), standard ▪ Metal cover (MC), optional
Fasteners	Self reaming and tapping screws (SRT)
Mounting	Hinge (pull side), top jamb (push side), parallel arm (push side)
Arms	Standard regular arm
Finishes/colors/ powder coat	▪ 622 Matte black ▪ 689 Aluminum ▪ 690 Statuary bronze ▪ 691 Light bronze ▪ 693 Black ▪ 695 Dark bronze ▪ 696 Brass ▪ Custom colors optional ▪ Optional SRI primer - powder coat only

Special templates | Customized installation templates or products may be available to solve non-standard applications. Contact LCN Product Support for assistance.

Mounting					Finish		Cover			Cylinder			Arm function*						
Hinge (pull) side	Top jamb (pull)	Top jamb (push)	Parallel arm	Stop face	Powder coat	Plated	Plastic	Metal	Non-handed	Non-sized	Accessibility	Delay Action***	CYLAVB**	Regular (double)	Standard (single)	Hold Open	Fusible Link	EDA/HEDA	CUSH/HCUSH	SCUSH/SHCUSH	Double Egress
■	■	■	■	■	■	■	■	■	■	■	♿	■	■	180°	■	180°	■	180°	110°	110°	■

■ Available
■ Not available

♿ Closer available with less than 5.0 lbs. opening force on 36" door.
* Maximum opening/hold open point with standard template.
** Advanced Variable Back Check.
*** Delay feature incorporates standard 4040 cylinder (not XP).

Mounting details

Hinge (pull) side mounting

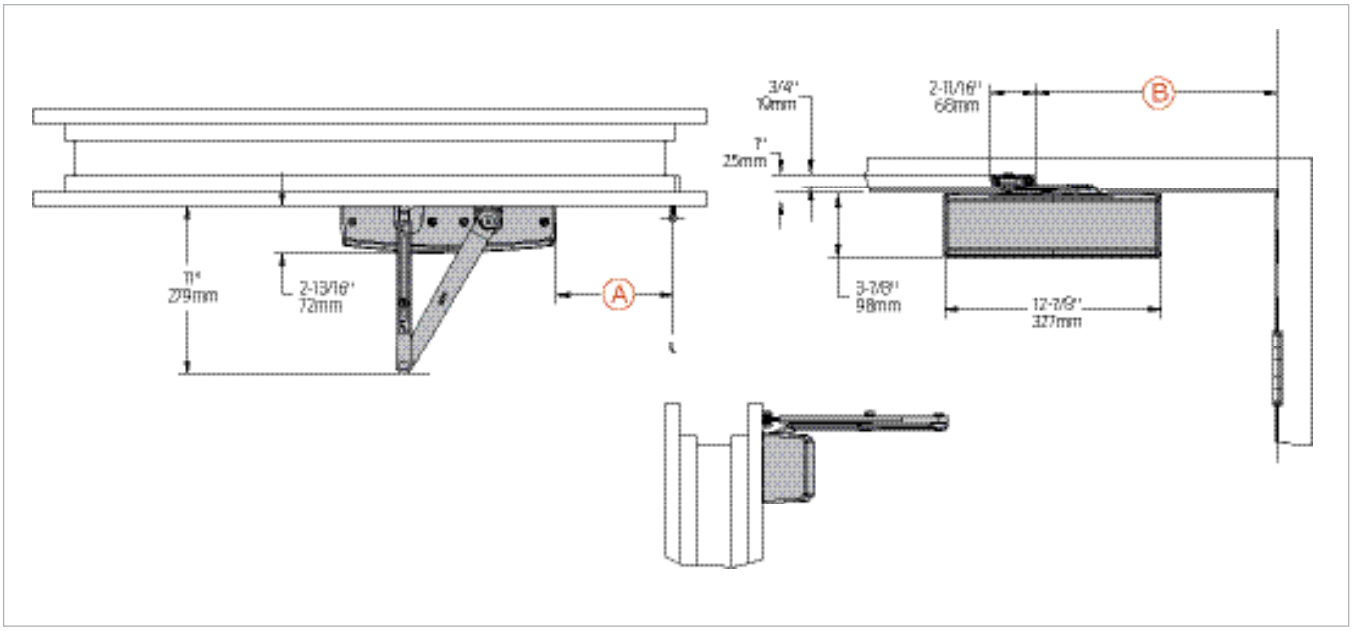

Butt hinges	Should not exceed 5" (127 mm) in width
Auxiliary stop	Recommended at hold open point or where a door cannot swing beyond templated maximum opening
Reveal	Should not exceed 3/4" (19 mm) for Regular Arm or Hold Open Arm
Top rail	▪ Less than 3 7/8" (98 mm) requires plate, 4050A-18. ▪ Plate requires 1 13/16" (44 mm) minimum
Clearance	2 13/16" (72 mm) behind door required for 90° installation
Delay action	Delays closing from 180°-70°. Delay time adjustable up to approximately 1 minute
Maximum opening	▪ Templating allows up to 180° ▪ Hold open points up to maximum opening with Hold Open Arm
	To 100°: A = 5 5/8" (143mm) B = 11 1/4" (286mm)
	100° to 120°: A = 4 3/8" (111mm) B = 10" (254mm)
	120° to 150°: A = 3 5/8" (92mm) B = 9 1/4" (235mm)
	150° to 180°: A = 2 5/8" (67mm) B = 8 1/4" (210mm)

Mounting details

Top jamb (push) side mounting

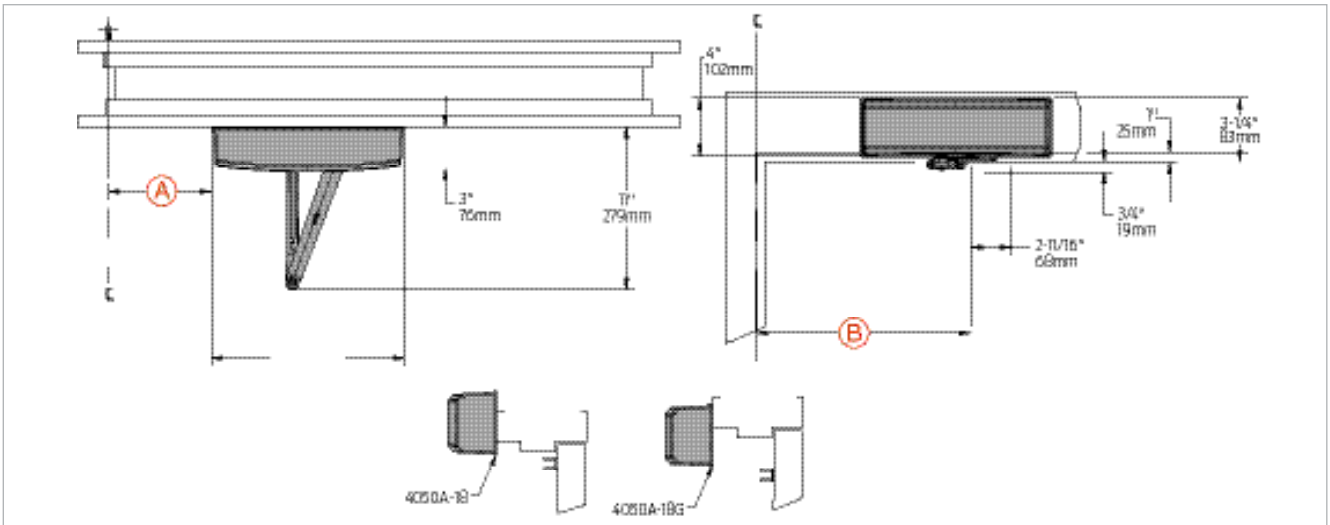

The 'A' dimension refers to the edge of the closer body to the center line of pivot or hinge.
The 'B' dimension refers to the edge of the closer shoe bracket to the center line of pivot or hinge.

Butt hinges	Should not exceed 5" (127 mm) in width		
Auxiliary stop	Recommended at hold open point or where a door cannot swing beyond templated maximum opening		
Reveal	Arm type	Reveal	Max opening
	Regular Arm	2 9/16"	Up to 180°
	Long Arm	4 13/16"	Up to 165°
	Hold Open Arm	2 9/16"	Up to 180°
	Hold Open Long Arm	4 13/16"	Up to 155°
Top rail	▪ Closer on 4050-18 plate requires minimum 1 3/4" (45mm) ▪ Closer on 4050-18G plate requires minimum 3 3/8" (86mm)		
Head frame	All top jamb installations require a plate ▪ 4050-18 plate requires minimum 3 1/4" (83mm) head frame and maximum stop height 5/8" (16mm) ▪ 4050-18G plate requires minimum 1 5/8" (41mm) head frame		
Delay action	Delay closing from 180° to 70°. Delay time adjustable up to approximately 1 minute.		
Maximum opening	▪ Templating allows up to 180° ▪ Hold open points up to maximum opening with Hold Open Arm		
	To 100°:	A = 5 1/2" (140mm) B = 11 1/4" (286mm)	
	100° to 120°:	A = 4 1/4" (108mm) B = 10" (254mm)	
	120° to 150°:	A = 3 1/2" (89mm) B = 9 1/4" (235mm)	
	150° to 180°:	A = 2 1/2" (64mm) B = 8 1/4" (210mm)	

Mounting details

Parallel arm (push) side mounting

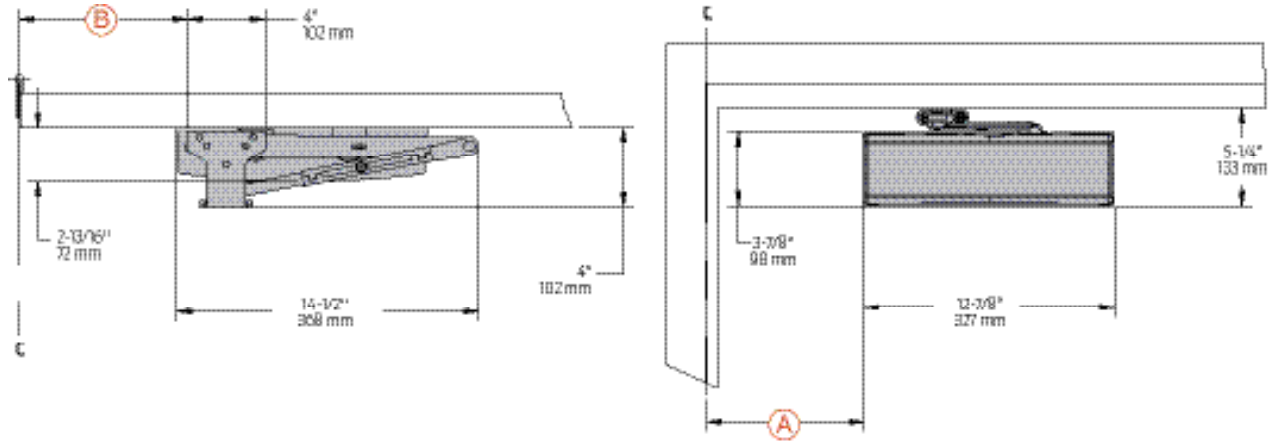

The 'A' dimension refers to the edge of the closer body to the center line of pivot or hinge.
The 'B' dimension refers to the edge of the closer shoe bracket to the center line of pivot or hinge.

Butt hinges	Should not exceed 5" (127 mm) in width	
Auxiliary stop	Recommended at hold open point, where the door cannot swing beyond templated maximum opening, or where Cush-n-Stop Arm is not used	
Top rail	Less than 5 1/4" (133mm) measured from the stop requires plate, 4050A-18PA. Plate requires 2" (51mm) minimum from the stop	
Clearance	For 4050A-62PA shoe is 4" (102mm) from door face	
Head frame	Flush or rabetted requires PA shoe adapter, 4050A-419	
Stop width	Minimum 1" (25mm)	
Blade stop	Clearance requires 1/2" (13mm) blade stop spacer, 4050A-61	
Delay action	Delays closing from 180°-70°; delay time adjustable up to approximately 1 minute.	
Auxiliary shoe	4050A-62A allows installation of Regular Arm with overhead holder/stop	
Maximum opening	To 100°:	A = 7 3/8" (187mm) B = 8 3/8" (213mm)
	100° to 130°:	A = 6 3/8" (162mm) B = 7 3/8" (187mm)
	130° to 150°:	A = 5 7/8" (149mm) B = 6 7/8" (175mm)
	150° to 180°:	A = 4 7/8" (124mm) B = 5 7/8" (149mm)
	Hold open points up to maximum opening with Hold Open Arm	

Note: Optional mounting requires PA shoe, 4050A-62PA for Regular or Hold Open Arms.

Mounting details

EDA and CUSH mounting

EDA mount

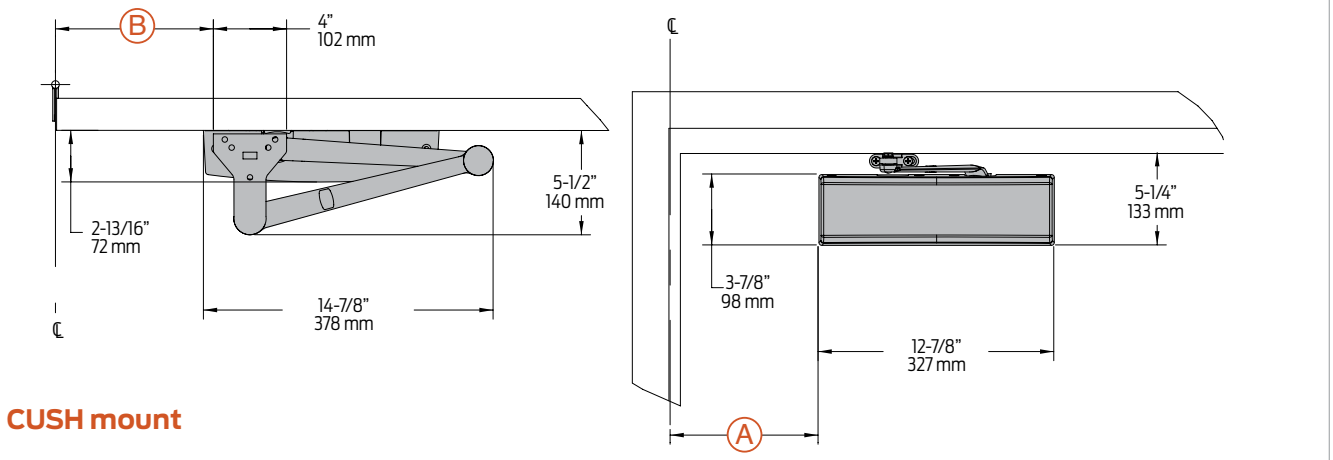

CUSH mount

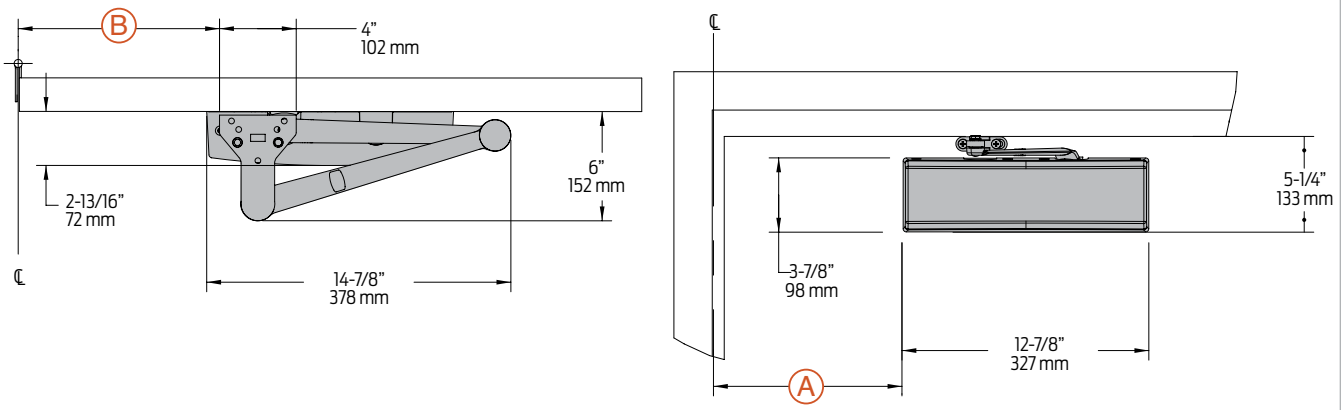

The 'A' dimension refers to the edge of the closer body to the center line of pivot or hinge.
The 'B' dimension refers to the edge of the closer shoe bracket to the center line of pivot or hinge.

Clearance	4050A-62EDA is 5 1/2" (140mm) from door face. 6" (152mm) for CUSH			
Head frame	Flush or rabetted requires flush panel adapter, 4050A-419			
CUSH Arm	Requires CUSH shoe support, 4050A-30 for fifth screw anchorage where reveal is less than 3 1/16" (78mm)			
Delay action	Delays closing from 180° to approximately 70°; delay time adjustable up to approximately 1 minute			
Maximum opening	EDA arm can be templated for points at: 100°		CUSH arms can be templated for opening/hold open point at:	
	100°:	A = 6 3/8" (162mm) B = 7 3/4" (197mm)	85°:	A = 7 7/8" (200mm) B = 9 1/8" (232mm)
	100° to 130°:	A = 4 7/8" (124mm) B = 6 1/4" (159mm)	90°:	A = 7 1/8" (181mm) B = 8 1/2" (216mm)
	130° to 150°:	A = 3 7/8" (98mm) B = 5 1/4" (133mm)	95°:	A = 6 1/2" (165mm) B = 7 7/8" (200mm)
	150° to 180°:	A = 2 7/8" (73mm) B = 4 1/4" (108mm)	100°:	A = 6" (152mm) B = 7 1/4" (184mm)
	Hold open points up to maximum opening with HEDA arm		105°:	A = 5 1/2" (140mm) B = 6 7/8" (175mm)
			110°:	A = 5" (127mm) B = 6 3/8" (162mm)

Notes:
- SCUSH dead stop points are approximately 5° more than templated stop point
- Hold open at templated stop points
- 4050A Series closers ordered with EDA or CUSH arms include 4050A-201 fifth hole spacer to support the shoe

Accessories

Cylinders

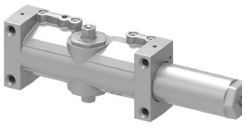

4050A-3071
Cast aluminum cylinder assembly (CYL)
- Non-handed
- Heavy duty

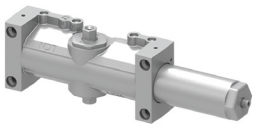

4050A-3071 DEL
Delay action cylinder (CYLDEL)
- Cylinder used for delayed action closing
- Non-handed
- Heavy duty

Covers

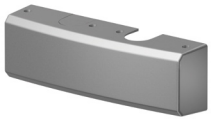

4050A-72
Plastic Cover (PC)
- Non-handed
- Standard



4050A-72MC
Metal Cover (MC)
- Non-handed
- Required for plated finishes and custom powder coat finishes
- Optional

Alternate cover



4050A-72ALT
Alternate cover
- Non-handed
- Optional, sold separately (not packed with closer)

Arms



4050A-3077
Regular Arm (REGARM)
- Non-handed
- Mounts pull side or top jamb with shallow reveal
- Includes PA shoe, 4050A-62PA required for parallel arm mounting



4050A-3077L
Long Arm (LONG)
- Non-handed
- Includes long rod and shoe, 4050A-79LR for top jamb mount
- Optional



4050A-3049
Hold Open Arm (H)
- Non-handed
- Mounts pull side or top jamb with shallow reveal
- Hold open adjustable shoe
- 4050A closer includes 4050A-62PA shoe required for parallel arm mounting
- Optional



4050A-3049L
Hold Open Long Arm (HLONG)
- Non-handed
- Hold open adjustable shoe
- Includes long head and tube, 4050A-3048L for top jamb mount
- Optional



4050A-3077EDA
Extra Duty Arm (EDA)
- Non-handed
- Features forged, solid steel main and forearm for potentially abusive installations



4050A-3049EDA
Hold Open Extra Duty Arm (HEDA)
- Handed
- Features forged, solid steel main and forearm for potentially abusive installations
- Hold open function is adjusted at the shoe



4050A-3077EDA/62G
Extra Duty Arm with 62G Thick Hub Shoe (EDAW62G)
- Non-handed
- Features forged, solid steel main and forearm for potentially abusive installations
- 62G shoe provides additional blade stop clearance for use with additional door hardware such as an overhead holder



4050A-3049EDA/62G
Hold Open Extra Duty Arm with 62G Thick Hub Shoe (HEDA62G)
- Handed
- Features forged, solid steel main and forearm for potentially abusive installations
- 62G shoe provides additional blade stop clearance for use with additional door hardware such as an overhead holder
- Hold open function is adjusted at the shoe

Accessories

Arms (cont.)



4050A-3077CNS
Cush-n-Stop Arm (CUSH)
- Non-handed
- Features solid forged steel main arm and forearm with stop in soffit shoe
- Optional



4050A-3049CNS
Hold Open Cush-n-Stop Arm (HCUSH)
- Provides hold open function with templated stop/hold open points
- Handle controls hold open function



4050A-3077SCNS
Spring Cush-n-Stop Arm (SCUSH)
- Non-handed
- For potentially abusive applications features solid forged steel main arm and forearm with spring loaded stop in the soffit shoe
- Optional

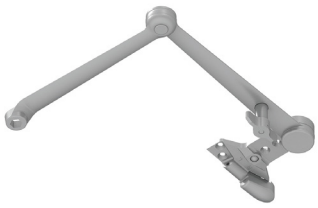

4050A-3049SCNS
Spring Hold Open Cush-n-Stop Arm (SHCUSH)
- Non-handed
- For potentially abusive applications features solid forged steel main arm and forearm with spring loaded stop in the soffit shoe
- Handle controls hold open function
- Optional

Installation accessories

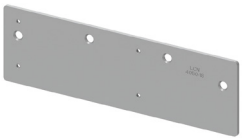

4050A-18
Plate
- Required for hinge side mount where top rail is less than 3 7/8" (98 mm)
  - Requires minimum 1 3/4" (44 mm) top rail

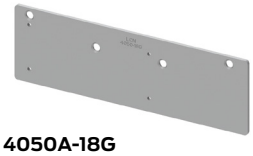

4050A-18G
Plate
- Locates top jamb mounted closer flush with top of head frame face in flush ceiling condition
- Contact LCN Product Support for minimum head frame requirement

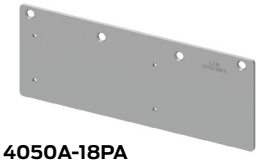

4050A-18PA
Plate
- Required for parallel arm mounting where top rail is less than 5 3/4" (146 mm), measured from the stop
  - Requires 2 1/4" (57 mm) minimum top rail



4050A-30
CUSH shoe support
- Provides anchorage for fifth screw used with CUSH arms, where reveal is less than 3 1/16" (78 mm)

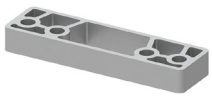

4050A-61
Blade stop spacer
- Required to lower parallel arm shoe to clear 1/2" (13 mm) blade stop



4050A-419
Flush panel adapter
- Provides horizontal mounting surface for parallel arm shoe on single rabetted or flush frame



4050A-62A
Auxiliary shoe
- Requires a top rail of 7 13/16" (198 mm)
- Replaces -62PA for parallel arm mounting of regular arm with overhead holder/stop
- Optional



4050A-62PA
PA shoe
- Required for parallel arm mounting

Ordering information

How-to-order 4050A Series closers

1. Select finish

☐ Standard powder coat _____
Matte Black (622), Aluminum (689), Dark Bronze (695), Statuary Bronze (690), Light Bronze (691), Black (693), or Brass (696).

Closer will be shipped with:
- Standard cylinder
- Standard cover
- Tri pack arm (Rw/PA)
- Self-reaming and tapping screws
  (unless options listed below are selected)

Closer options

Cylinder
☐ Delay action cylinder (CYLDEL)

Cover
☐ Metal cover (MC)
☐ Alternate cover (ALT)

Finish
☐ Custom powder coat (RAL) _____
(handed metal cover required)
☐ SRI primer
(use with powder coat finishes only)

Arm
☐ Regular Arm (REGARM)
☐ Long Arm (LONG)
☐ Hold Open Arm (H)
☐ Hold Open with Parallel Arm Bracket (HWPA)
☐ Hold Open Long Arm (HLONG)
☐ Extra Duty Arm (EDA)
☐ Extra Duty Arm with 62G Thick Hub Shoe (EDAW62G)
☐ Hold Open Extra Duty Arm (HEDA)
☐ Hold Open Extra Duty Arm with 62G Thick Hub Shoe (HEDA62G)
☐ Cush-n-Stop Arm (CUSH)
☐ Hold Open Cush-n-Stop Arm (HCUSH)
☐ Spring Cush-n-Stop Arm (SCUSH)
☐ Spring Hold Open Cush-n-Stop Arm (SHCUSH)

Optional screw packs
☐ Through bolt[1] self reaming and tapping screws (TBSRT)
☐ Wood and machine screws (WMS)
☐ Through bolt[1] wood and machine screws (TBWMS)
☐ Torx machine screws (TORX)
☐ Through bolt[1] and torx machine screws (TBTRX)

Installation accessories
☐ Plate, 4050A-18
☐ Plate, 4050A-18G
☐ Plate, 4050A-18PA
☐ CUSH shoe support, 4050A-30
☐ Blade stop spacer, 4050A-61
☐ Auxiliary shoe, 4050A-62A
☐ Flush panel adapter, 4050A-419

Special template
☐ ST- _____

1. Specify door thickness if other than 1 ¾".

Table of sizes

- 4050A cylinders are adjustable from size 1 through size 6 and is shipped set to size 3
- Closing power of 4050A Series closers may be adjusted 50%

Exterior (and vestibule) door width

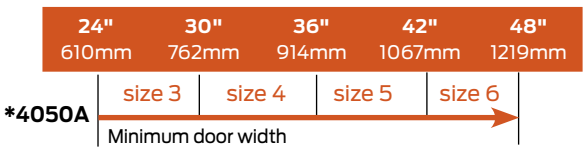

Interior door width

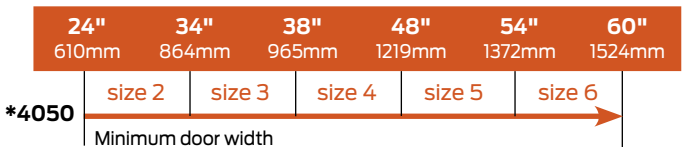

→ Indicates recommended range of door width for closer size.
* Adjustable Size 1 thru 5.

Reduced opening force 4050A Series closers

CAUTION! Any manual door closer, including those certified by BHMA to conform to ANSI Standard A156.4, that is selected, installed and adjusted based on ADA or other reduced opening force requirements may not provide sufficient power to reliably close and latch a door.

Refer to Automatic Operators catalog for information on systems that meet reduced opening force requirements without effecting closing power.

Door width	36"	42"	48"
8.5* lbs.	4050A	4050A	4050A
5.0* lbs.	4050A	4050A	4050A

* Maximum opening force.

4050AT Series

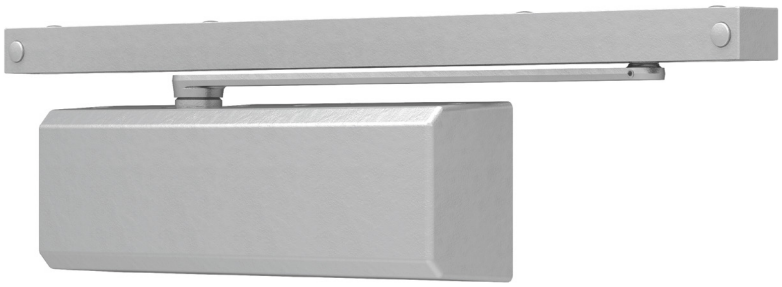

The 4050AT cast aluminum heavy duty track closer is designed for rugged high frequency traffic areas. Ideal for commercial building applications and competitive specification situations that demand a combination of quality, reliability and value.

Features

Certifications	Grade 1 - ANSI A156.4, UL 10C, ADA, 100 hour salt spray, meets BAA - Buy American Act
Body construction	▪ Cast aluminum body ▪ Full complement bearing ▪ 1 ½" diameter piston ▪ 11/16"diameter double heat treated pinion journal
Fluid	All weather fluid
Handing	Non-handed
Size	Adjustable spring size 1-4
Warranty	25 years

Cover	▪ Plastic cover (PC), standard ▪ Metal cover (MC), optional
Fasteners	Self Reaming and Tapping Screws (SRT)
Mounting	Pull side on door, pull side top jamb, push side on door
Arms	Standard arm and track with roller
Finishes/colors/ powder coat	▪ 622 Matte black ▪ 689 Aluminum ▪ 690 Statuary bronze ▪ 691 Light bronze ▪ 693 Black ▪ 695 Dark bronze ▪ 696 Brass ▪ Custom colors optional
	▪ Optional SRI primer - powder coat only

Special templates | Customized installation templates or products may be available to solve non-standard applications. Contact LCN Product Support for assistance.

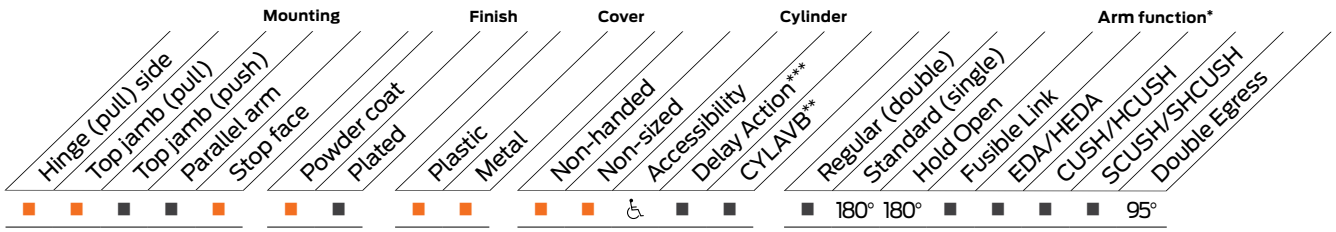

■ Available
■ Not available

♿ Closer available with less than 5.0 lbs. opening force on 36" door.
* Maximum opening/hold open point with standard template.
** Advanced Variable Back Check.
*** Delay feature incorporates standard 4040 cylinder (not XP).

Mounting details

Hinge (pull) side mounting

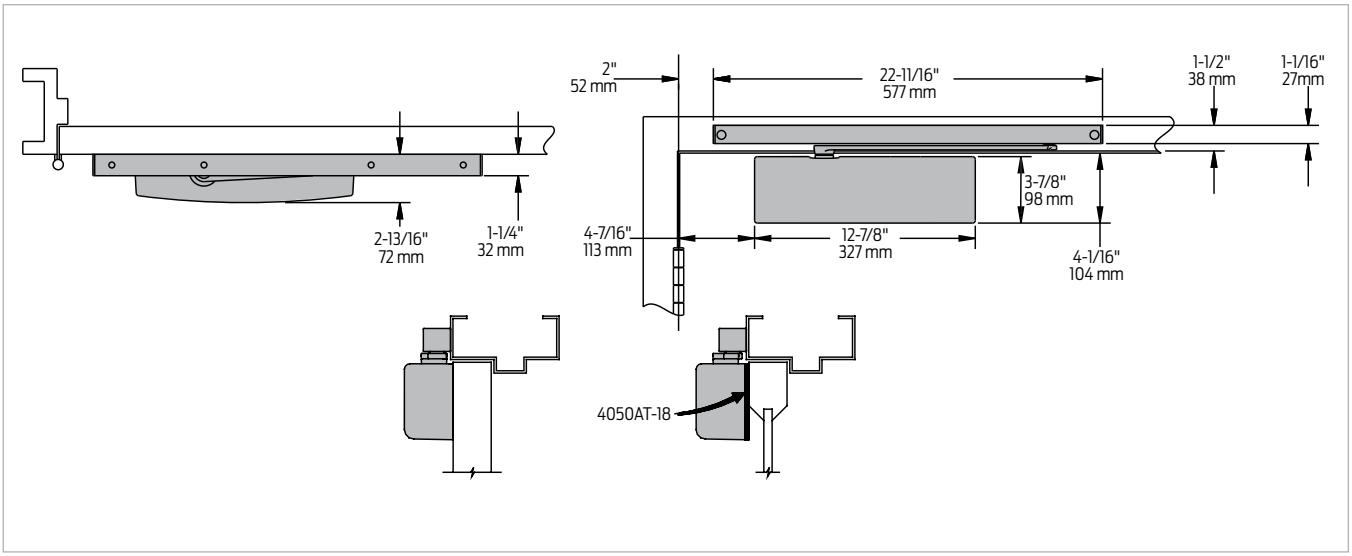

Butt hinges	Should not exceed 5" (127 mm) in width
Auxiliary stop	▪ Recommended at hold open point or where a door cannot swing 180° ▪ Optional track bumper assembly assists back check in cushioning the opening swing of the door ▪ It is not intended to replace an auxiliary stop
Reveal	Should not exceed 1/8" (3 mm) for standard arm
Top rail	Less than 4 1/8" (104 mm) requires plate, 4050AT-18; plate requires 2 1/16" (52mm) minimum
Head frame	Requires 1 1/4" (32 mm) minimum
Clearance	2 13/16" (52 mm) behind door required for 90° installation
Maximum opening	Templating allows 180°

Note: Consult factory for applications where door must swing 180°.

Mounting details

Top jamb (pull) side mounting

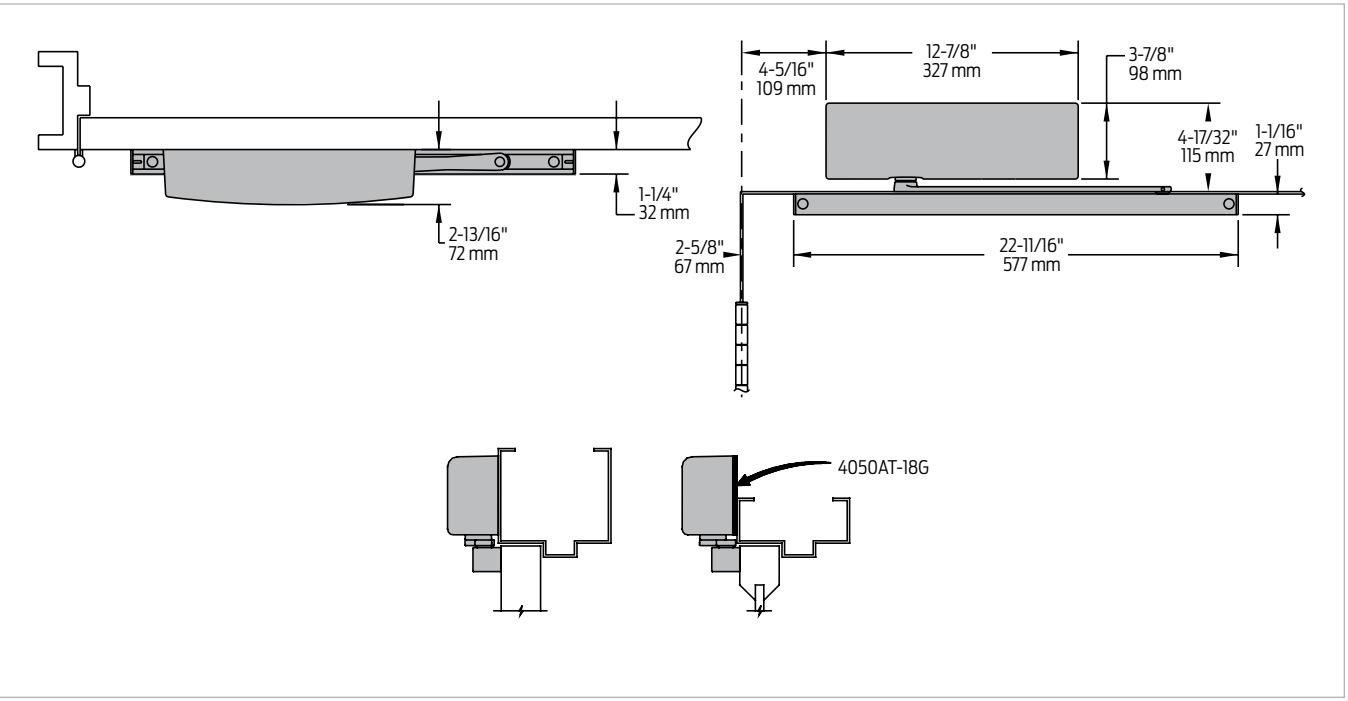

Butt hinges	Should not exceed 5" (127 mm) in width
Auxiliary stop	▪ Recommended at hold open point or where a door cannot swing 180° ▪ Optional track bumper assembly assists back check in cushioning the opening swing of the door ▪ It is not intended to replace an auxiliary stop
Reveal	Should not exceed 1/8" (3 mm)
Head frame	Less than 4 1/2" (114 mm), requires plate, 4050AT-18G; plate requires 2 1/16" (52 mm) minimum
Clearance	1 1/4" (32 mm) behind door required for 180° installation
Maximum opening	Templating allows 180°

Note: Consult factory for applications where an exterior or large/heavy door must swing 180°.

Mounting details

Stop face (push) side mounting

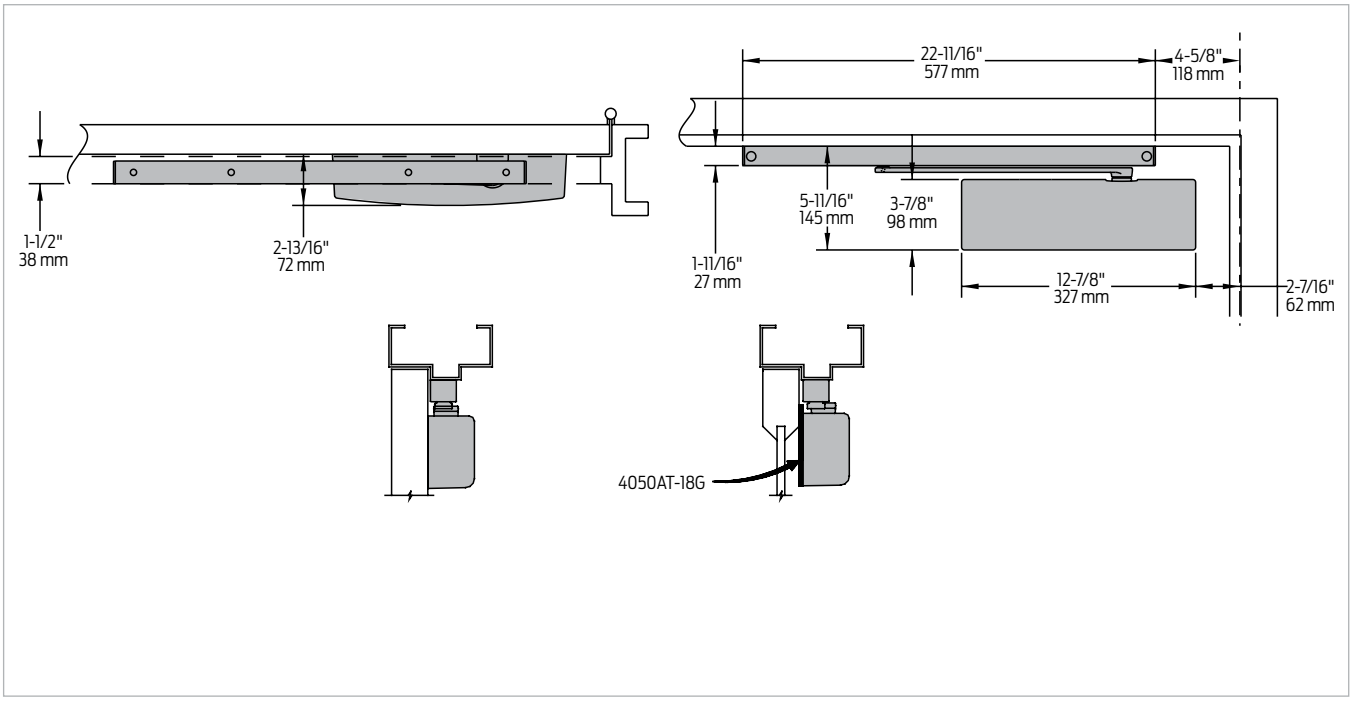

Butt hinges	Should not exceed 5" (127 mm) in width
Auxiliary stop	▪ Recommended at hold open point or where a door cannot swing 120° ▪ Optional track bumper assembly assists back check in cushioning the opening swing of the door ▪ It is not intended to replace an auxiliary stop
Clearance	Projects 2 9/16" (65 mm) from face of door
Top rail	▪ Less than 5 11/16" (144 mm) measured from the stop, requires plate, 4050AT-18G ▪ Plate requires 3 5/16" (84 mm) minimum
Stop width	Minimum 1 1/4" (32 mm)
Maximum opening	Templating allows 120°

Note: Consult factory for applications where door must swing 180°.

Accessories

Cylinders

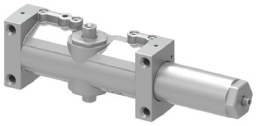

4050AT-3071
Cast aluminum cylinder assembly (CYL)
- Non-handed
- Standard

Covers



4050AT-72
Plastic Cover (PC)
- Non-handed
- Standard



4050AT-72MC
Metal Cover (MC)
- Non-handed
- Required for plated finishes and custom powder coat finishes
- Optional

Arms



4050AT-3077T
Standard Arm (STDTRKARM)
- Non-handed
- Arm does not include track roller



4050AT-3077DE
Double Egress Arm (DE)
- Handed
- For double egress doors and frames
- Does not include track roller
- Maximum reveal is 3" (76 mm)
- Optional

Tracks



4050AT-3038
Standard Track (STDTRK)
- Non-handed
- Non hold open
- Will accept hold open clip and/or bumper assembly
- Standard



4050AT-3038B
Track with Bumper (BUMP)
- Non-handed
- Non hold open
- Will accept hold open clip
- Optional



4050AT-3038H
Hold Open Track (H)
- Non-handed
- With hold open clip installed
- Will accept bumper assembly
- Optional



4050AT-3038HB
Hold Open Track with Bumper (HBMP)
- Non-handed
- With hold open clip and bumper assembly installed
- Optional

Installation accessories



4050AT-18
Plate
- Required for pull side (door mount) installations where top rail is less than 4 1/8"
  - Requires minimum 2 1/16" top rail



4050AT-18G
Plate
- Required for pull side top jamb installations where head frame is less than 4 1/2"
  - Requires minimum 2 1/16" head frame
- Required for push side (door mount) installations where top rail is less than 5 11/16" measured from the stop
  - Requires minimum 3 5/16" top rail



4050AT-169
Track bumper
- Mounts in track to assist back check, does not replace auxiliary stop
- Limits maximum opening; consists of bumper, bumper post and mounting screw



4050AT-3054
Hold open clip
- Mounts in track to provide hold open function
- Hold open point controlled by clip location
- Consists of clip and mounting screws
- Requires 4050AT-3034H hold open track roller



4050AT-3034
Track roller
- Quiet, low friction roller assembly
- Shoulder dimension "X" = 1/8" (3mm)



4050AT-3034H
Hold open track roller
- Quiet, low friction roller assembly
- Shoulder dimension "X" = 1/8" (3mm)



4050AT-480
Pinion extender
- Connects pinion to arm

Ordering information

How-to-order 4050AT Series closers

1. Select finish

☐ Standard powder coat _____
Matte Black (622), Aluminum (689), Dark Bronze (695), Statuary Bronze (690), Light Bronze (691), Black (693), or Brass (696)

Closer will be shipped with:
- Standard cylinder
- Standard cover
- Standard arm
- Track roller
- Standard track
- Self reaming and tapping screws
  (unless options listed below are selected)

Closer options

Cover

☐ Metal cover (MC)

Finish

☐ Custom powder coat (RAL) _____
(handed metal cover required)
☐ SRI primer (use with powder coat finishes only)

Track

☐ Track with bumper (BUMP)
☐ Hold open track (H)
☐ Hold open track with bumper (HBMP)

Screw pack

☐ Through bolt[1] and torx machine screws (TBSRT)
☐ Wood and machine screws (WMS)
☐ Through bolt[1] wood and machine screws (TBWMS)
☐ TORX machine screws (TORX)
☐ Through bolt[1] and torx machine screws (TBTRX)

Installation accessories

☐ Plate, 4050AT-18
☐ Plate, 4050AT-18G

Special template

☐ ST- _____

1. Specify door thickness if other than 1 3/4".

Table of sizes

- Non-sized 4050AT Series cylinder is adjustable from sizes 1 through 4 and is shipped set to size 3

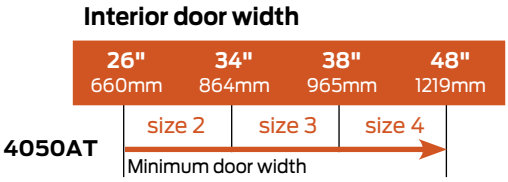

→ Indicates recommended range of door width for closer size.

Reduced opening force 4050AT Series closers

CAUTION! Any manual door closer, including those certified by BHMA to conform to ANSI Standard A156.4, that is selected, installed and adjusted based on ADA or other reduced opening force requirements may not provide sufficient power to reliably close and latch a door.

Refer to Automatic Operators catalog for information on systems that meet reduced opening force requirements without effecting closing power.

Door width	36"	42"	48"
8.5* lbs.	N/A	N/A	N/A
5.0* lbs.	4050AT	4050AT	4050AT

* Maximum opening force.

4110 Series



The 4110 is LCN's best performing heavy duty closer with an adjustable spring and possible hold open point beyond 140 degrees, meeting ADA requirements. Backed by a 30 year warranty, the cast iron body and all weather fluid offer versatility in high traffic applications.

Features

Certifications	Grade 1 - ANSI A156.4, UL 10C, ADA, 100 hour salt spray, meets BAA - Buy American Act
Body construction	▪ Cast iron body ▪ Full complement bearing ▪ 1 1/2" diameter piston ▪ 11/16" diameter double heat treated pinion journal
Fluid	All weather fluid
Handing	Handed
Templating	Peel-n-Stick templates - 2 1/2" x 6" mounting hole pattern
Size	Adjustable spring size 1-5, or sized 6, includes LCN Green Dial
Warranty	30 years

Cover	▪ Plastic cover (PC), standard ▪ Metal cover (MC), optional
Fasteners	Self reaming and tapping screws (SRT)
Mounting	Parallel arm (push side)
Arms	Extra-duty arm
Finishes/colors/ powder coat	▪ 622 Matte black ▪ 689 Aluminum ▪ 690 Statuary bronze ▪ 691 Light bronze ▪ 693 Black ▪ 695 Dark bronze ▪ 696 Brass ▪ Custom colors optional ▪ Optional SRI primer - powder coat only ▪ Optional plated finishes

Special templates | Customized installation templates or products may be available to solve non-standard applications. Contact LCN Product Support for assistance.

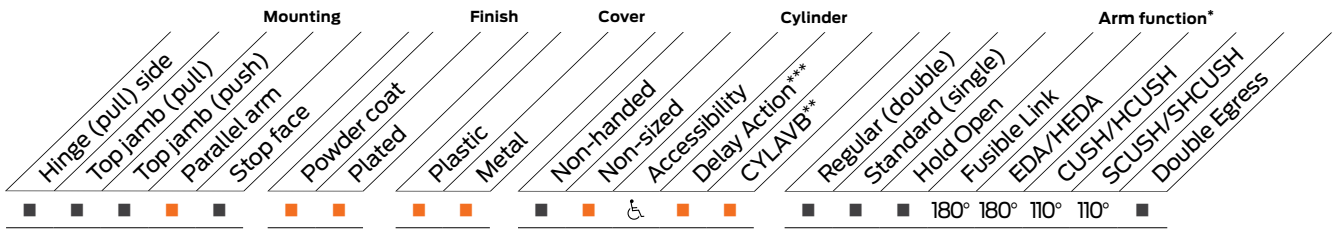

■ Available
■ Not available

♿ Closer available with less than 5.0 lbs. opening force on 36" door.
* Maximum opening/hold open point with standard template.
** Advanced Variable Back Check.
*** Delay feature incorporates standard 4040 cylinder (not XP).

Mounting details

Parallel arm (push) side mounting

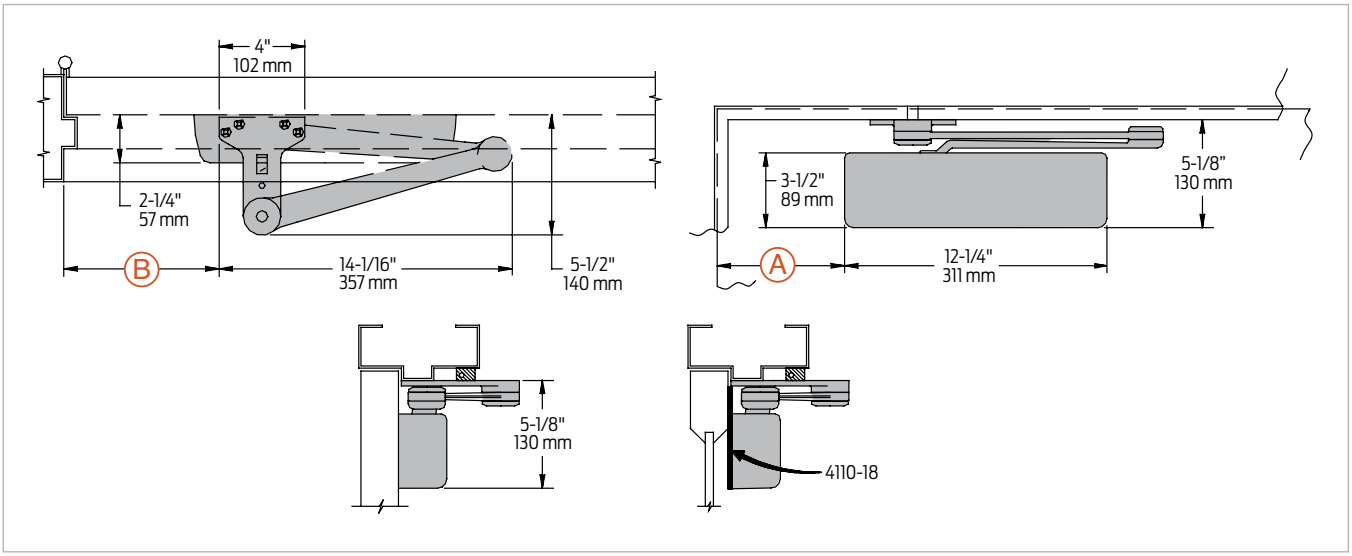

Butt hinges	Should not exceed 5" (127 mm) in width
Auxiliary stop	Recommended at hold open point, where a door cannot swing 180°, or where Cush-n-Stop Arm is not used
Clearance	EDA, or CUSH shoe is 5 1/2" (140 mm) from door face
Top rail	▪ Less than 5 1/8" (130 mm) measured from stop requires plate, 4110-18 ▪ Plate requires 2" (51 mm) minimum measured from the stop
Stop width	Minimum 1" (25 mm)
Head frame	Flush or rabetted requires CUSH flush panel adapter, 4110-419
Reveal	Less than 2 3/4" (70 mm), use CUSH shoe support, 4110-30 with CUSH arms
Blade stop spacer	4110-61 required to clear 1/2" (13 mm) blade stop
Cush arm	Requires CUSH shoe support, 4110-30 for fifth screw anchorage where reveal is less than 3 1/16" (78 mm)
Delay action	▪ Add suffix “CYLDEL” to selected cylinder ▪ Not available with 4116 cylinder; delays closing from maximum opening to approximately 70° ▪ Delay time adjustable up to approximately 1 minute
Advanced Variable Back Check	▪ Cylinder starts back check at approximately 45° instead of the normal 75° ▪ Add suffix “CYLAVB” to selected cylinder

Maximum opening	EDA or Fusible Link Arm can be templated for:	CUSH Arm can be templated for maximum opening at:
	100° A = 5 15/16" (151 mm) B = 7 1/4" (184 mm)	85° A = 8 5/16" (211 mm) B = 9 5/8" (244 mm)
	140° A= 4 7/16" (113 mm) B = 5 3/4" (146 mm)	90° A= 7 11/16" (195 mm) B = 9" (229 mm)
	or 180° A= 2 15/16" (75 mm) B = 2 15/16" (75 mm)	or 110° A= 5 9/16" (141 mm) B = 6 7/8" (175 mm)
	▪ Hold open points up to maximum opening with HEDA or Fusible Link Arm	▪ Hold open point at maximum opening with HCUSH Arm ▪ SCUSH hold open points are approximately 5° less than templated stop point

Accessories

Cylinders

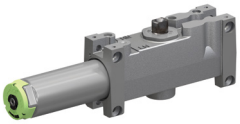

4111(6)-3071
Cast iron cylinder assembly (CYL)
- Handed
- Standard

Covers



4110-72
Plastic Cover (PC)
- Non-handed
- Standard

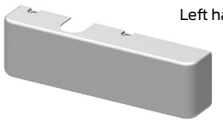

Left hand shown

4110-72MC
Metal Cover (MC)
- Handed
- Required for plated finishes and custom powder coat finishes
- Optional

Arms



4110-3049EDA
Hold Open Arm (H)
- Handed
- Optional
- Provides hold open function, adjustable at shoe



4110-3049FL
Fusible Link Arm (FL)
- Handed
- Releases hold-open function adjustable at shoe when exposed to temperatures above 165° F
- Optional

Note: Check local codes before specifying FL arms. NOT A life safety product!



4110-3077CNS
Cush-n-Stop Arm (CUSH)
- Non-handed
- Features solid forged steel main arm and forearm with built-in stop in soffit shoe



4110-3077EDA
Extra Duty Arm (EDA)
- Non-handed
- Features forged, solid steel main and forearm for potentially abusive installations



4110-3077EDA/62G
Extra Duty Arm (EDA)
- Non-handed
- Features forged, solid steel main and forearm for potentially abusive installations
- Optional 4110-62G thick hub shoe for blade stop clearance



4110-3049CNS
Hold Open Cush-n-Stop Arm (HCUSH)
- Non-handed
- Provides hold open function with templated stop/hold open points
- Handle controls hold open function



4110-3077SCNS
Spring Cush-n-Stop Arm (SCUSH)
- Non-handed
- For abusive applications features solid forged steel main arm and forearm with spring loaded stop in the soffit shoe
- Optional



4110-3049SCNS
Spring Hold open Cush-n-Stop Arm (SHCUSH)
- Non-handed
- For abusive applications features solid forged steel main arm and forearm with spring loaded stop in the soffit shoe
- Handle controls hold open function
- Optional

Installation accessories

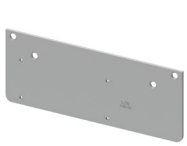

4110-18
Plate
- Required for push side mount where top rail is less than 5 1/8" (130 mm), measured from the stop
- Requires minimum 2" (51 mm) minimum top rail



4110-30
CUSH shoe support
- Provides anchorage for fifth screw used with CUSH arm, where reveal is less than 3 1/16" (78 mm)

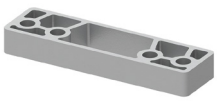

4110-61
Blade stop spacer
- Lowers parallel arm shoe to clear 1/2" (13 mm) blade stop



4110-419
PA flush panel adapter
- Provides horizontal mounting surface for CUSH shoe on single rabetted or flush frame

Ordering information

How-to-order 4110 Series closers

1. Select cylinder size
- ☐ 4111 (adjustable from size 1 to 5)
- ☐ 4116 (CYLDEL, SHCUSH or HCUSH arm not available)

2. Specify hand
- ☐ Right Hand (RH)
- ☐ Left Hand (LH)

3. Select finish
- ☐ Standard powder coat _____
  Matte Black (622), Aluminum (689), Dark Bronze (695), Statuary Bronze (690), Light Bronze (691), Black (693), or Brass (696)

Closer will be shipped with:
- Standard cylinder
- Standard cover
- Extra duty arm
- Self reaming and tapping screws
  (unless options listed below are selected)

Closer options

Cylinder
- ☐ Delay action cylinder (CYLDEL) (not available with 4116)
- ☐ Advanced variable back check (CYLAVB)

Cover
- ☐ Metal cover (MC)

Finish
- ☐ Custom powder coat (RAL) _____ (handed metal cover required)
- ☐ Plated finish, US _____ (handed metal cover required)
- ☐ SRI primer (use with powder coat finishes only)

Arm
- ☐ Extra Duty Arm (EDA)
- ☐ Extra Duty Arm with 62G Thick Hub Shoe (EDAW62G)
- ☐ Hold Open Extra Duty Arm (HEDA)
- ☐ Fusible Link Arm (FL)
- ☐ Cush-n-Stop Arm (CUSH)
- ☐ Hold Open Cush-n-Stop Arm (HCUSH)(N/A with 4116 cylinder)
- ☐ Spring Cush-n-Stop Arm (SCUSH)
- ☐ Spring Hold Open Cush-n-Stop Arm (SHCUSH) (N/A with 4116 cylinder)

Optional screw packs
- ☐ Through bolt[1] self reaming and tapping screws (TBSRT)
- ☐ Wood and machine screws (WMS)
- ☐ Through Bolt[1] Wood and Machine Screws (TBWMS)
- ☐ Torx Machine Screws (TORX)
- ☐ Through Bolt[1] and Torx Machine Screws (TBTRX)

Installation accessories
- ☐ Plate, 4110-18
- ☐ CUSH shoe support, 4110-30
- ☐ Blade stop spacer, 4110-61
- ☐ PA flush panel adapter, 4110-419

Special template
- ☐ ST- _____

1. Specify door thickness if other than 1 ¾".

Table of sizes

- Select closer based on width of door
- The spring power of non-sized 4111 cylinder is adjustable from size 1 through size 5 and is shipped set to size 3
- Sized 4116 series cylinders 6
- Delay action not available with 4116 cylinder
- HCUSH and SHCUSH arm not available with 4116 cylinder

Exterior (and vestibule) door width



Interior door width

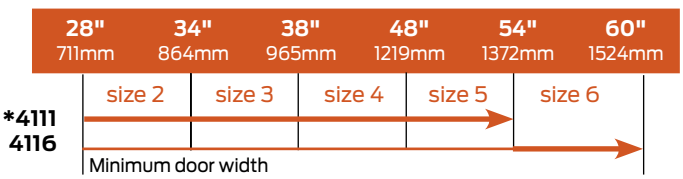

→ Indicates recommended range of door width for closer size.
* Adjustable Size 1 thru 5.

Reduced opening force 4110 Series closers

CAUTION! Any manual door closer, including those certified by BHMA to conform to ANSI Standard A156.4, that is selected, installed and adjusted based on ADA or other reduced opening force requirements may not provide sufficient power to reliably close and latch a door.

Refer to Automatic Operators catalog for information on systems that meet reduced opening force requirements without effecting closing power.

Door width	36"	42"	48"
8.5* lbs.	4111	4111	4111
5.0* lbs.	4111	4111	4111

* Maximum opening force.

4110T Series



The 4110T is a Grade 1 push side, mounting track closer designed for interior high traffic applications. It features an optional track bumper assembly for additional cushioning in the opening swing of the door.

Features

Certifications	Grade 1 - ANSI A156.4, UL 10C, ADA, 100 hour salt spray, meets BAA - Buy American Act
Body construction	▪ Cast iron body ▪ Full complement bearing ▪ 1 1/2" diameter piston ▪ 11/16" diameter double heat treated pinion journal
Fluid	All weather fluid
Handing	Handed
Size	Sized 1, 3, or 4
Warranty	30 years

Cover	▪ Plastic cover (PC), standard ▪ Metal cover (MC), optional
Fasteners	Self reaming and tapping screws (SRT)
Mounting	Stop face (push side)
Arms	Standard arm and track with roller
Finishes/colors/ powder coat	▪ 622 Matte black ▪ 689 Aluminum ▪ 690 Statuary bronze ▪ 691 Light bronze ▪ 693 Black ▪ 695 Dark bronze ▪ 696 Brass ▪ Custom colors optional ▪ Optional SRI primer - powder coat only ▪ Optional plated finishes

Special templates | Customized installation templates or products may be available to solve non-standard applications. Contact LCN Product Support for assistance.

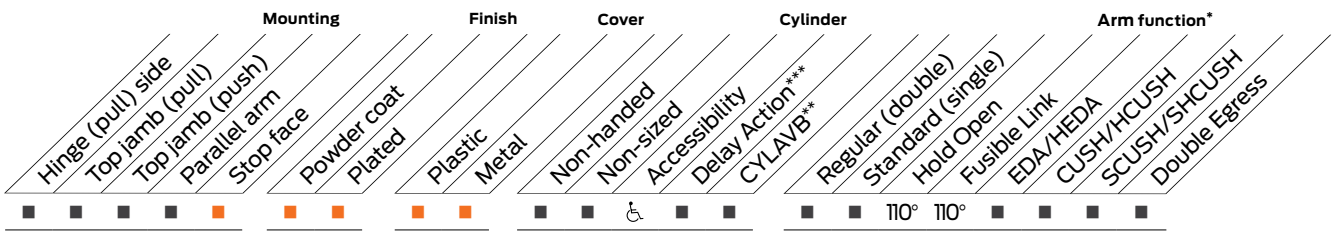

■ Available
■ Not available

♿ Closer available with less than 5.0 lbs. opening force on 36" door.
* Maximum opening/hold open point with standard template.
** Advanced Variable Back Check.
*** Delay feature incorporates standard 4040 cylinder (not XP).

Mounting details

Stop face (push) side mounting

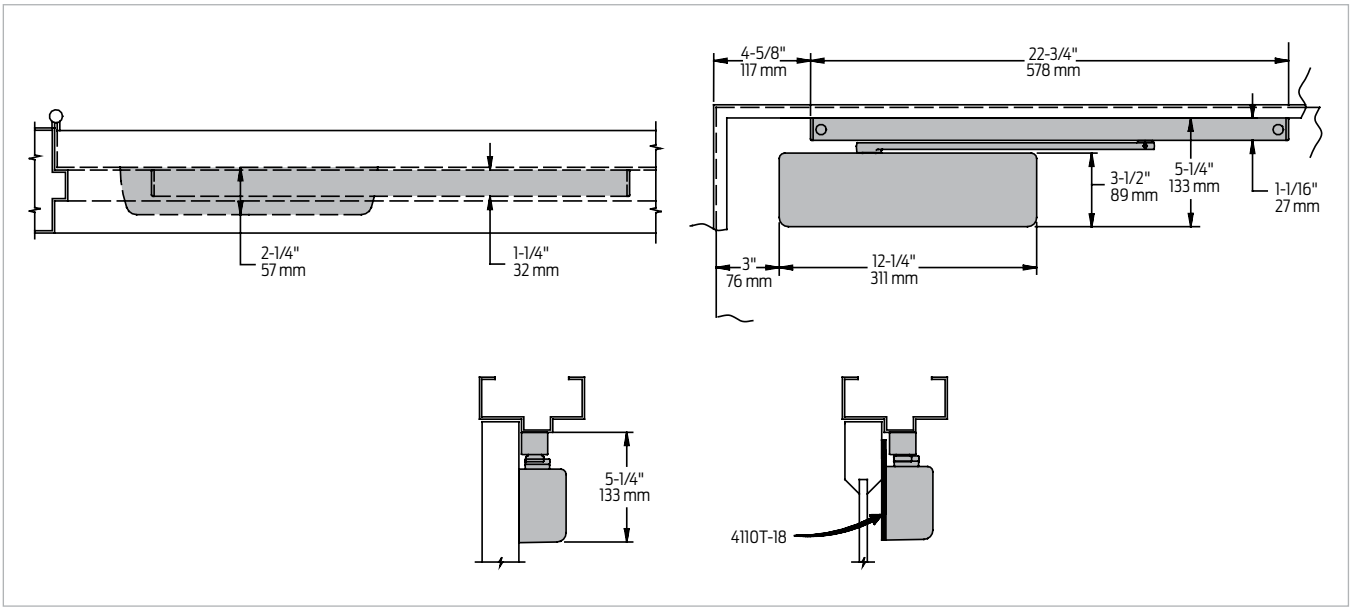

Butt hinges	Should not exceed 5" (127 mm) in width
Auxiliary stop	▪ Recommended at hold open point or where a door cannot swing 110° ▪ Optional track bumper assembly assists back check in cushioning the opening swing of the door ▪ It is not intended to replace an auxiliary stop
Clearance	Projects 2 1/4" (57 mm) from face of door
Top rail	▪ Less than 5 1/4" (133 mm) measured from the stop, requires plate, 4110T-18 ▪ Plate requires 2 1/4" (57 mm) minimum
Stop width	Minimum 1 1/4" (32 mm)
Maximum opening	▪ Templating allows 110° with standard track arm, limited to 100° with optional bumper tracks ▪ Variable hold open angles with many options

Note: Consult factory for applications where door must swing 180°.

Accessories

Cylinders

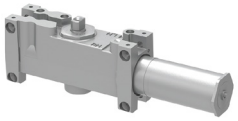

4111(3,4)T-3071
Cast iron cylinder assembly (CYL)
- Handed
- Standard

Covers



4110T-72
Plastic Cover (PC)
- Non-handed
- Standard

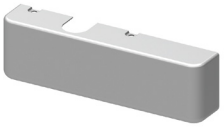

4110T-72MC
Metal Cover (MC)
- Handed
- Required for plated finishes and custom powder coat finishes
- Optional

Arms



4110T-3077T
Standard Arm (STDTRKARM)
- Handed
- Roller not included with arm

Tracks



4110T-3038
Standard Track (STDTRK)
- Non-handed
- Non hold open
- Will accept hold open clip and/or bumper assembly
- Standard



4110T-3038B
Track with Bumper (BUMP)
- Non-handed
- Non hold-open
- With bumper assembly installed
- Will accept hold-open clip
- Optional



4110T-3038H
Hold Open Track (H)
- Non-handed
- With hold open clip installed
- Will accept bumper assembly
- Optional



4110T-3038HB
Hold Open Track with Bumper (HBMP)
- Non-handed
- With hold open clip and bumper assembly installed
- Optional

Installation accessories



4110T-18
Plate
- Required where top rail, when measured from the stop, is less than 5 1/4" (133 mm)
- Requires minimum 2 1/4" (57 mm) minimum top rail



4110T-169
Track bumper
- Mounts in track to assist back check, not replace auxiliary stop
- Limits maximum opening; consists of bumper, bumper post, and mounting screw



4110T-3054
Hold-open clip
- Mounts in track to provide hold open function
- Hold open point controlled by clip location
- Consists of clip and mounting screws
- Requires 4110T-3034H track roller



4110T-3034H
Track roller
- Quiet, low friction roller assembly
- Shoulder dimension "X" = 1/16" (2mm)
- Spring-loaded hold-open mechanism



4110T-3034
Track roller
- Quiet, low friction roller assembly
- Shoulder dimension "X" = 1/16" (2 mm)

Ordering information

How-to-order 4110T Series closers

1. Select cylinder size
- ☐ 4111T (ADA)
- ☐ 4113T
- ☐ 4114T

2. Specify hand
- ☐ Right Hand (RH)
- ☐ Left Hand (LH)

3. Select finish
- ☐ Standard powder coat

_____

Matte Black (622), Aluminum (689), Dark Bronze (695), Statuary Bronze (690), Light Bronze (691), Black (693), or Brass (696)

Closer will be shipped with:
- Standard cover
- Standard arm
- Track roller
- Standard track
- Self reaming and tapping screws (unless options listed below are selected)

Closer options

Cover
- ☐ Metal cover (MC)

Finish
- ☐ Custom powder coat (RAL) _____ (handed metal cover required)
- ☐ Plated finish, US _____ (handed metal cover required)
- ☐ SRI primer (use with powder coat finishes only)

Track
- ☐ Track with Bumper (BUMP)
- ☐ Hold Open Track (H)
- ☐ Hold Open Track with Bumper (HBMP)

Screw pack
- ☐ Through bolt[1] self reaming and tapping screws (TBSRT)
- ☐ Wood and machine screws (WMS)
- ☐ Through bolt[1] wood and machine screws (TBWMS)
- ☐ Torx machine screws (TORX)
- ☐ Through bolt[1] and torx machine screws (TBTRX)

Installation accessories
- ☐ Plate, 4110T-18

Special template
- ☐ ST-_____

1. Specify door thickness if other than 1 3/4".

Table of sizes

- Select closer based on width of door
- Sized 4110T Series cylinders available in size 1, 3 or 4
- Specify next higher size closer where strong drafts exists

Interior door width

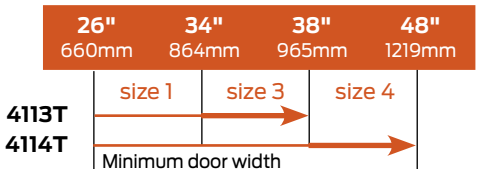

→ Indicates recommended range of door width for closer size.

Reduced opening force 4110T Series closers

CAUTION! Any manual door closer, including those certified by BHMA to conform to ANSI Standard A156.4, that is selected, installed and adjusted based on ADA or other reduced opening force requirements may not provide sufficient power to reliably close and latch a door.

Refer to Automatic Operators catalog for information on systems that meet reduced opening force requirements without effecting closing power.

Door width	36"	42"	48"
8.5* lbs.	N/A	N/A	N/A
5.0* lbs.	4110T	4110T	4110T

* Maximum opening force.

4000T Series

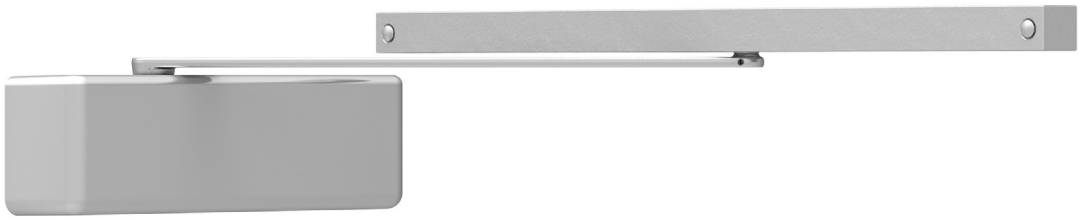

The 4000T is a heavy duty closer to reliably control fire and smoke barrier doors with maximum swing of 90º. Designed for use with an SEM 7850 wall magnet.

Features

Certifications	Grade 1 - ANSI A156.4, UL 10C, ADA, 100 hour salt spray, meets BAA - Buy American Act
Body construction	▪ Cast iron body ▪ Full complement bearing ▪ 1 1/2" diameter piston ▪ 3/4" diameter double heat treated pinion journal
Fluid	All weather fluid
Handing	Non-handed
Size	Size 3 or 4
Warranty	30 years

Cover	▪ Plastic cover (PC), standard ▪ Metal cover (MC), optional
Fasteners	Wood and machine screws (WMS)
Mounting	In a wall pocket, hinge side
Arms	Standard arm and track with roller
Finishes/colors/ powder coat	▪ 622 Matte black ▪ 689 Aluminum ▪ 690 Statuary Bronze ▪ 691 Light Bronze ▪ 693 Black ▪ 695 Dark Bronze ▪ 696 Brass ▪ Custom colors optional ▪ Optional SRI primer - powder coat only ▪ Optional plated finishes

Special templates | Customized installation templates or products may be available to solve non-standard applications. Contact LCN Product Support for assistance.

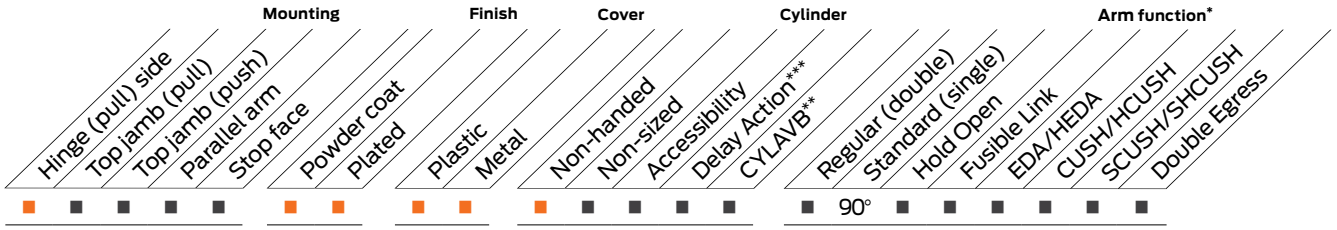

■ Available
■ Not available

* Maximum opening/hold open point with standard template.
** Advanced Variable Back Check.
*** Delay feature incorporates standard 4040 cylinder (not XP).

Mounting details

Wall pocket mounting

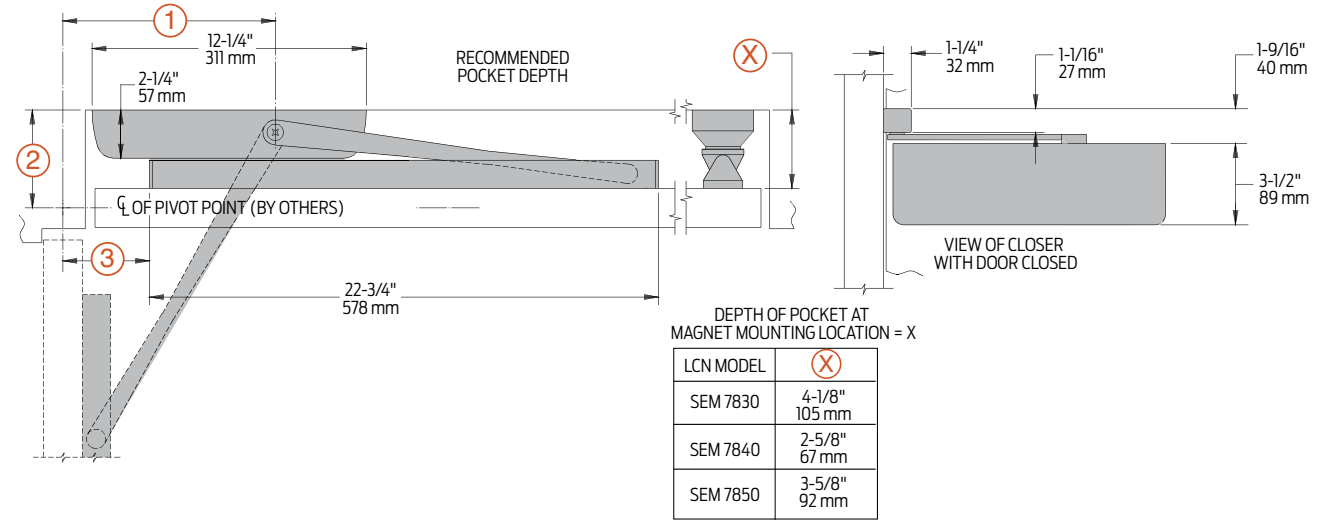

DEPTH OF POCKET AT MAGNET MOUNTING LOCATION = X

LCN MODEL	X
SEM 7830	4-1/8" 105 mm
SEM 7840	2-5/8" 67 mm
SEM 7850	3-5/8" 92 mm

Butt hinges	▪ Pocket pivot, total door hinge or center pivot are door mounting options ▪ Should not exceed 5" (127 mm)
Pocket depth	▪ See above table for distance required between door and closer mounting location ▪ This dimension is measured from the cylinder mounting surface to the pull side face of the door at 90°
Wall magnet	▪ SEM 7850 is recommended; use of other magnets may require special construction to alter the depth of the pocket at the magnet location ▪ See Fire Life Safety catalog
Dimension 1	▪ The distance from the centerline of the closer shaft to the centerline of the hinge or pivot ▪ For pocket pivot or total door hinge, 9 1/2" (241 mm) ▪ For butt hinge 8" (203 mm) ▪ For center pivot 10" (254 mm)
Dimension 2	▪ The distance from the centerline of the pivot or hinge to the cylinder mounting surface ▪ For pocket pivot 4 1/2" (114 mm) ▪ For total door hinge 3 7/8" (98mm) ▪ For butt hinge 2 7/8" (73 mm) ▪ For center pivot 4 1/2" (114 mm)
Dimension 3	▪ The distance from the centerline of the pivot or hinge to end of the track ▪ For pocket pivot or total door hinge, 3 7/8" (98mm) ▪ For butt hinge 2 3/8" (60mm) ▪ For center pivot 4 5/8" (117mm)
Maximum opening	▪ Templating allows 90° only ▪ Hold open point 90° with magnet

Notes:
- Cylinder mounts on wall
- Track mounts on hinge side of door

Accessories

Cylinders

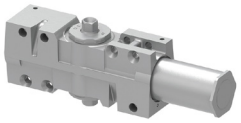

4003(4)T-3071
Cast iron cylinder assembly (CYL)
- Non-handed
- Standard

Covers

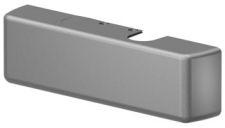

4000T-72
Plastic Cover (PC)
- Non-handed

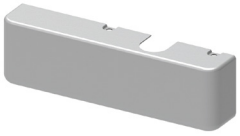

4000T-72MC
Metal Cover (MC)
- Handed
- Required for plated finishes and custom powder coat finishes
- Optional

Arms

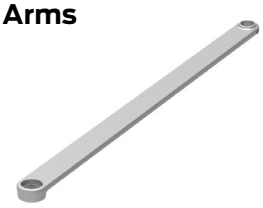

4000T-3077T
Standard Arm (STDTRKARM)
- Non-handed
- Roller not included with arm

Tracks



4000T-3038
Standard Track (STDTRK)
- Non-handed
- Non hold open
- Will not accept hold open clip or bumper assembly
- Standard



4000T-3034
Track roller
- Quiet, low friction roller assembly
- Shoulder dimension “X”= 1/8" (3 mm)

Ordering information

How-to-order 4000T Series closers

1. Select cylinder size
- ☐ 4003T
- ☐ 4004T

2. Select finish
- ☐ Standard powder coat _____
  Matte Black (622), Aluminum (689), Dark Bronze (695), Statuary Bronze (690), Light Bronze (691), Black (693), or Brass (696)

Closer will be shipped with:
- Standard cylinder
- Standard cover
- Standard arm
- Track roller
- Standard track
- Self-reaming and tapping screws
  (unless options listed below are selected)

Closer options

Cover
- ☐ Metal cover (MC)

Finish
- ☐ Custom powder coat (RAL) _____
  (handed metal cover required)
- ☐ Plated finish _____
  (handed metal cover required)
- ☐ SRI primer (use with powder coat finishes only)

Screw pack
- ☐ Through bolt[1] wood and machine screws (TBWMS)
- ☐ Torx machine screws (TORX)
- ☐ Through bolt[1] and torx machine screws (TBTRX)

Special template
- ☐ ST-_____

1. Specify door thickness if other than 1 3/4".

Table of sizes

- Select closer based on width of door
- 4000T Series cylinders available in size 3 or 4
- Closing power of 4000T Series closers is not adjustable

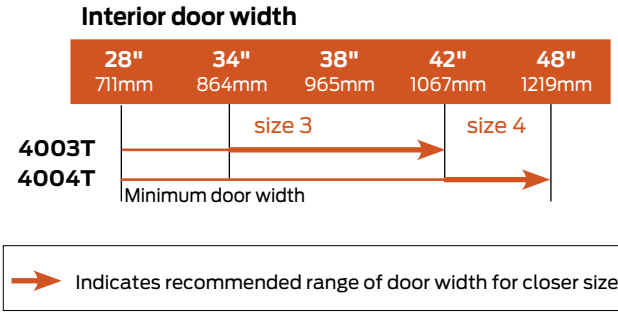

About Allegion

Allegion (NYSE: ALLE) is a global pioneer in seamless access, with leading brands like CISA®, Interflex®, LCN®, Schlage®, SimonsVoss® and Von Duprin®. Focusing on security around the door and adjacent areas, Allegion secures people and assets with a range of solutions for homes, businesses, schools and institutions.

For more, visit **www.allegion.com**

KRYPTONITE ■ LCN ■ SCHLAGE ■ STEELCRAFT ■ VON DUPRIN

© 2024 Allegion
009509, Rev. 9/24
www.allegion.com/us

ALLEGION™