HIGH SECURITY CLOSERS SERIES

PRODUCT SELECTION GUIDE

High Security LCN closers feature a vandal resistant design engineered for each application, easy installation, and superior performance. This guide is based on the desired mounting of the closer.

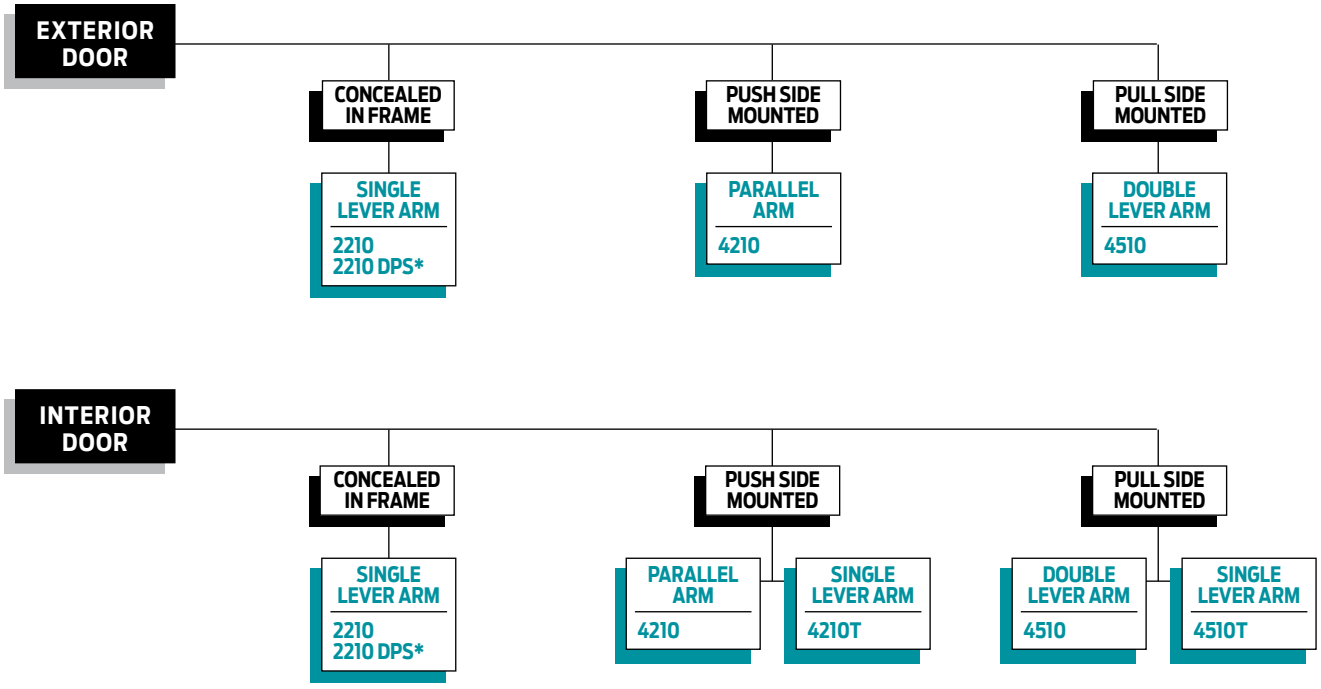

** Door position switch.*

PRODUCT COMPARISON

This chart shows a basic comparison of LCN High Security closers.
Refer to the specific closer chapter for complete details.

CLOSER SERIES	MOUNTING				FINISH		COVER		CYLINDER						**ARM FUNCTION		
	HINGE (PULL) SIDE	PARALLEL ARM (PUSH)	STOP FACE	CONCEALED (FRAME)	POWDER COAT	PLATED	PLASTIC	METAL	HANDED	NON-SIZED	SIZED	ACCESSIBILITY	DELAYED ACTION	AVB***	DPS SWITCH	STANDARD (SINGLE)	EDA	CUSH/HCUSH
2210	○	○	○	●	●	●	○	●	●	○	●	○	○	●	○	180°	○	○
2210DPS	○	○	○	●	●	●	○	●	●	○	●	○	○	●	●	180°	○	○
4210	○	●	○	○	●	●	○	●	●	●	●	♿	●	●	○	○	180°	110°
4210T	○	○	●	○	●	●	○	●	●	○	●	♿	○	●	○	110°	○	○
4510	●	○	○	○	●	●	○	●	●	●	●	♿	●	●	○	○	140°	○
4510T	●	○	○	○	●	●	○	●	●	○	●	♿	○	●	○	180°	○	○

● AVAILABLE
○ NOT AVAILABLE

♿ *Closer available with less than 5.0 lbs. opening force on 36˝ door.*
** *Maximum opening with standard template. See individual closer series for degrees of opening per installation.*
*** *Advanced Variable Backcheck.*

PHONE 877-671-7011
FAX 800-248-1460
www.allegion.com/us

4/15 009426

HIGH SECURITY CLOSERS SERIES

APPLICATIONS

- For any concealed or surface mounted installation subject to potential abuse or vandalism.
- For correctional, aluminum, hollow metal, or wood doors and frames.
- Can be used with hinge or pivot mounted door.
- Adapter plates and other installation accessories available for unusual conditions.

FEATURES COMMON TO HIGH SECURITY CLOSERS

- Each closer is a vandal resistant design for a specific mounting; hinge side, parallel arm, stop face, or concealed.
- All high security closers are based on a cylinder certified to exceed 10,000,000 cycles in independent testing.
- Handed for right or left swinging doors.
- Closers to meet ADA reduced opening force requirements.
- All closers furnished with TORX tamper resistant machine screws.
- All surface mount closers include a heavy gauge steel cover with four attachment points.
- All closer adjustments are protected when installation is complete.
- All track closers use a jam resistant track and tamper resistant arm/roller assembly.
- Adjustable hydraulic backcheck cushions opening swing prior to 90º.
- Advanced variable backcheck (AVB) is available on all high security closers.
- Separate regulation of general closing speed and latching speed.

DESIGN ASSISTANCE

LCN has been providing reliable solutions to unique door control problems for over 85 years. Design and specification assistance are only a phone call away.

Contact LCN for assistance or technical information at **877-671-7011** or FAX **800-248-1460 (order entry)**, FAX **815-879-1495** for Technical Support.

WARRANTY

High Security Series closers carry a 15 year limited warranty, except for the 2210DPS Series closer that carries a 2 year limited warranty. See General Information Section for complete warranty details.

MATERIALS

- High strength **cast iron** cylinder.
- **Forged steel** main arms and forearms.
- One piece **forged steel** piston.
- **All weather fluid** eliminates seasonal adjustments.
- **High efficiency, full compliment**, low friction bearings.
- **Double heat treated** pinions.
- Tamper resistant regulating screws.
- Full rack and pinion hydraulic action.
- Quiet, low friction track and roller combination for all single lever arm closers.

FINISHES

- Available in six standard or a wide selection of optional custom powder coat finishes to blend with door and frame.
- LCN's powder coat finishes surpass 100 hours of salt spray which is over four times the ANSI standard for corrosion resistance.
- For installations where a higher level of corrosive resistance is required, LCN offers an optional special rust inhibiting (SRI) pre-treatment. Closers that combine the exclusive LCN powder coat finish and the SRI pre-treatment exceed the ANSI standard for corrosion resistance even further.
- Plated finishes are available as an option to accent door and frame.

LISTINGS & APPROVALS

UL listed for self-closing doors without hold-open under "SWINGING DOOR CLOSERS"(GVEV) file R 1943.
Tested and certified under ANSI Standard A 156.4. Consult factory for details.
Consult factory for other listings such as; ULC, California State Fire Marshal, Bureau of Standards and Appeals.

POSITIVE PRESSURE

LCN closers have been certified for three hours by UL to be in compliance with UBC 7.2 (1997) and UL 10 C. Contact LCN for specific details on door closer fire ratings.

FASTENERS

TORX MACHINE SCREW (TORX) pack contains tamper resistant machine screws to install the closer. Thru Bolts for TORX machine screws are available for all high security closers, except 2210 series.
LCN thru bolts (TB) can be installed on 1-3/4″ thick doors with the 1/4-20 TORX screws supplied with the closer. Optional sizes are available for 1-5/8″ or 1-3/8″ door thicknesses, but this must be specified when ordering.

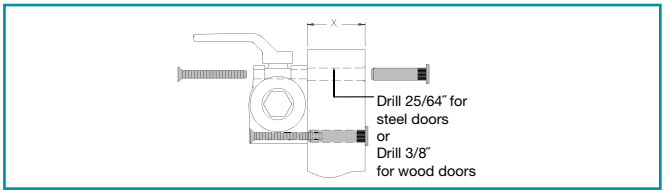

Note 1: For Thru Bolts, specify door thickness if other than 1-3/4″ (44mm).

Special driver bits are required for installation or removal of TORX machine screws with a security pin as supplied with LCN High Security closers. All bits fit a 1/4″ hex drive socket. For 1/4-20 screws use T-27, for #12 machine screws use T-25, for 10# machine screws use T20, for #8 (and undercut #10) machine screws use T15, and for #6 machine screws use T10. The specific bits required for installation are listed on the "HOW TO ORDER" page for each closer. Sold separately.

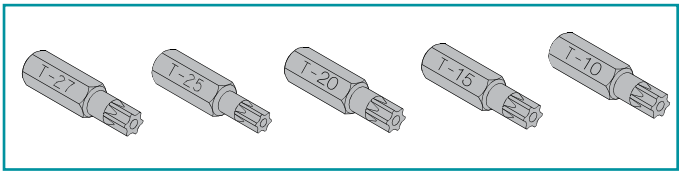

MAINTENANCE

Closers mounted according to LCN installation instructions require no periodic maintenance or adjustments.

SPECIFICATIONS

Refer to "SPECIFICATIONS" section for suggested architectural specifications.

PHONE 877-671-7011
FAX 800-248-1460
www.allegion.com/us
4/15 009426

2210 SERIES

FEATURES

The concealed 2210 Series, heavy duty, high security track closer features complete concealment with special components to minimize tampering and vandalism. Forged steel, single lever arm and heavy steel mounting plate are designed for correctional, vandal prone, institutional, and other high traffic applications. A choice of finishes and cylinder functions meet correctional and vandal resistant requirements.

CONCEALED IN FRAME MOUNTING

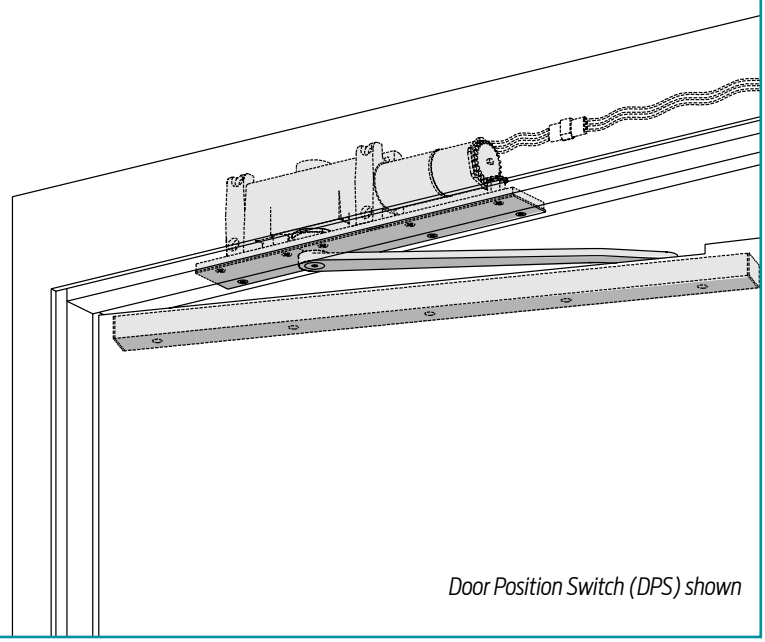

Door Position Switch (DPS) shown

- Standard 2210 Series closer shipped with standard arm, security track (non hold-open), two piece metal cover plate, and TORX machine screw pack. For options see 2210 Series page 5.
- Sized cylinders for interior doors to 4´6˝ and exterior doors to 3´6˝.
- Concealed cylinder mounts in head frame, specify right or left swinging door.
- Optional Door Position Switch (DPS). Limited two year warranty.
- Standard or optional custom powder coat finish.
- Optional SRI primer for installations in corrosive conditions (excludes DPS option). (Available with powder coat finishes only).
- The 2210 Series is UL and cUL listed for self-closing doors, grade one.
- Tested and certified under ANSI A156.4.

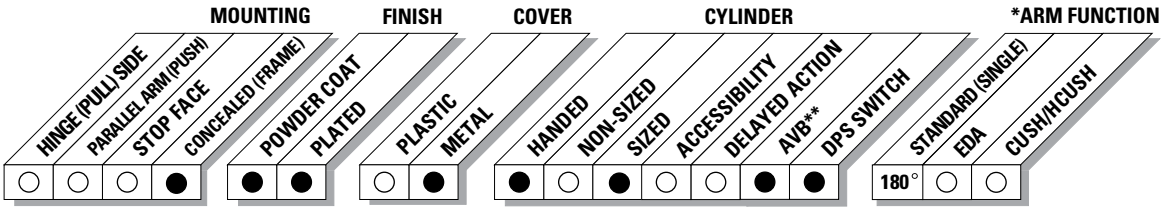

● AVAILABLE
○ NOT AVAILABLE

* *Maximum opening with standard template.*
** *Advanced Variable Backcheck.*

PHONE 877-671-7011
FAX 800-248-1460
www.allegion.com/us
4/15 009426

2210 SERIES

MOUNTING DETAILS

CONCEALED MOUNTING

For interior or exterior doors.
Single acting cylinder in head frame.
Concealed arm and track in top rail of door.

MAXIMUM OPENING

Templating allows 180º.

Consult factory if door will be held open at 180º.

Pivot mounting door limits opening to 110º and increases minimum door width to 32" (813 mm). Consult factory.

Please note that many track style door closers are capable of allowing 180º of door swing.

Note: Track style closers are at their weakest closing force at 180º. Consult factory for applications where door must swing 180º.

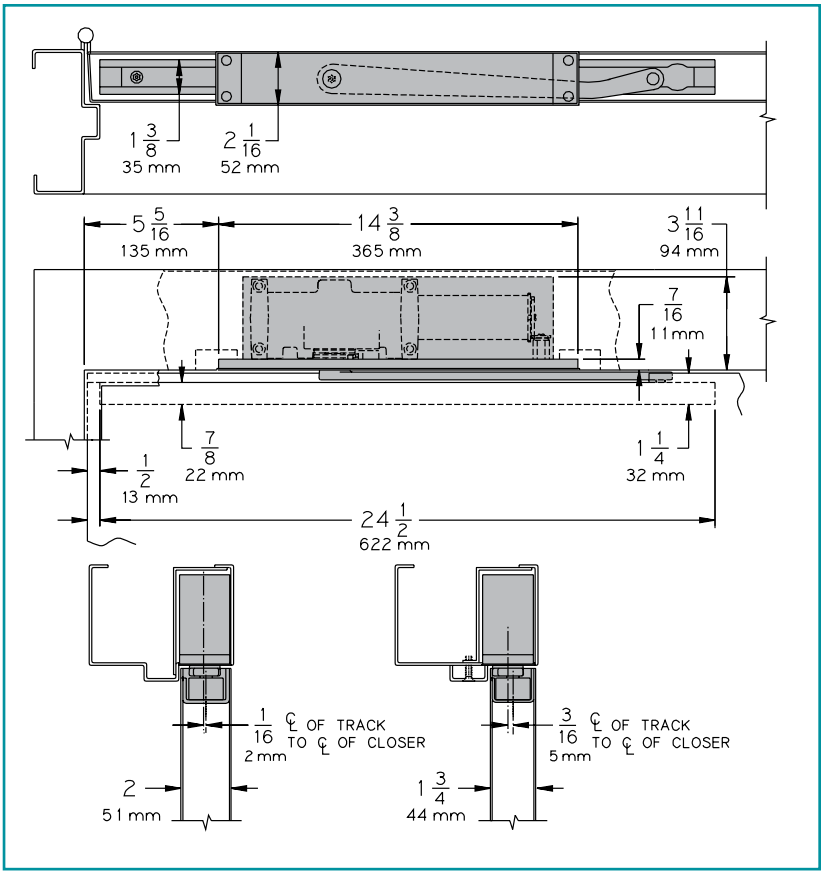

- **Butt Hinges** should not exceed 4-1/2″ (114 mm) in width.
- **Auxiliary Stop** is recommended where a door cannot swing 180º.
- **Top Rail** 1-1/4″ (32 mm) mortise required. 3/8″ (10 mm) cutout required at top of door, stop face only.
- **Door Thickness** 1-3/4″ (44 mm) minimum.
- **Door Width** 28″ (711 mm) minimum.
- **Head Frame** 5-3/4″ (146 mm) wide and 4″ (102 mm) high with 2-3/16″ (56 mm) rabbet required. Consult factory if any dimension is less.
- **Steel Mounting Plate** thickness 3/8″ (10 mm).
- **Door Position Switch** Optional, newly redesigned, field adjustable switch can interface with security and monitoring systems. Add suffix "DPS" to selected cylinder. Finish plates must be removed for access to adjustments. Provides normally open (N.O.) and normally closed (N.C.) circuit. A three wire connector harness with 84″ (2134 mm), 16 AWG leads is furnished to simplify connection to field wiring. Single pole double throw (SPDT) contacts rated at 125/250 VAC at 10.1 amps maximum resistive load are standard.
- **Advanced Variable Backcheck** cylinder starts backcheck at approximately 45º instead of the normal 75º. Add suffix "AVB" to selected cylinder (eg. 2213 DPS AVB).

Options

- Advanced Variable Backcheck Cylinder.
- Door Position Switch.
- Test kit.

Special Templates

Customized installation templates or products may be available to solve unusual applications. Contact LCN Product Support for assistance.

PHONE 877-671-7011
FAX 800-248-1460
www.allegion.com/us
4/15 009426

CYLINDERS

CYLINDER, 2210-3071
Standard, handed cast iron cylinder assembly.
For various applications see "Table of Sizes" on 2210 Series page 6.

ARM

STANDARD SECURITY ARM, 2210-3077T
Handed arm features solid forged steel and large cross section for potentially abusive installations.
Special threaded attachment of track roller for extra security.
Double slab arm/pinion attachment for maximum strength.
Can only be used with high security track roller, 2210-3034.
Roller is included with arm when 2210-3077T ordered separately.

TRACK

SECURITY TRACK, 2210-3038
Non-handed, high security track.
Hold-open function not available.
Designed to eject foreign objects placed in track during either opening or closing motion.
Requires track roller, 2210-3034.

SECURITY TRACK ROLLER, 2210-3034
Low friction track roller threads into 2210-3077T arm for extra strength and security.
Can not be removed without disconnecting arm from closer.

FINISH PLATES

LONG PLATE, 2210-11
Heavy gauge metal finish plate.
Plate 2210-12 also required for complete enclosure.
Six point TORX® mounting screws for extra security.
Closer adjustments not accessible with finish plates installed.

SHORT PLATE, 2210-12
Heavy gauge metal finish plate.
Plate 2210-11 also required for complete enclosure.
Four point TORX® mounting screws for extra security.
Closer adjustments not accessible with finish plates installed.

INSTALLATION ACCESSORIES

TEST KIT, 2210-493
Battery operated test kit designed to verify switch signal response point. Test kit can be used directly at door location.
(used for 2210 DPS only)

3071

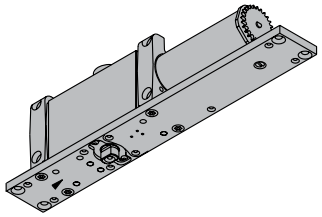

3077T

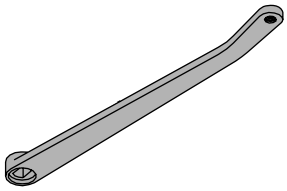

3038

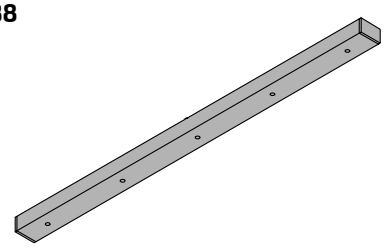

3034

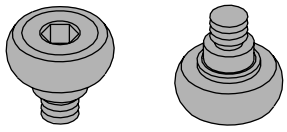

12 11

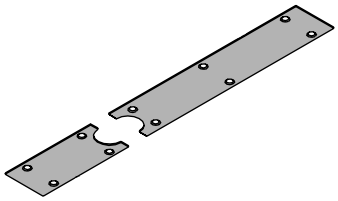

493

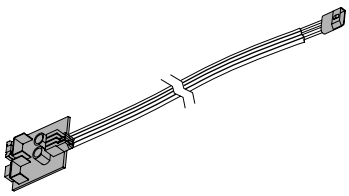

PHONE 877-671-7011
FAX 800-248-1460
www.allegion.com/us
4/15 009426

2210 SERIES

ORDERING INFORMATION

TABLE OF SIZES

Select closer based on width of door.
2210 Series cylinders available in size 3, 4, or 5.
Spring power is set at the factory for size 3, 4, or 5, but is field adjustable (may be increased 50%).

EXTERIOR (and VESTIBULE) DOOR

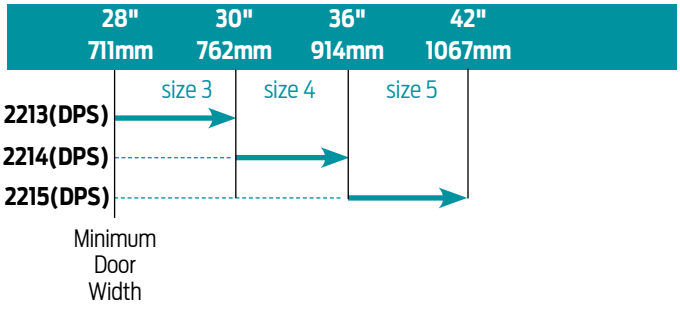

INTERIOR DOOR WIDTH

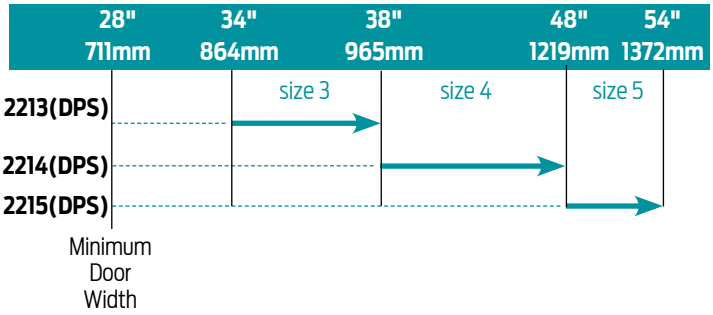

→ Indicates recommended range of door width for closer size.

Note: Minimum door width 28˝ (711mm).

HOW-TO-ORDER 2210 SERIES CLOSERS

1. SELECT CYLINDER SIZE

☐ 2213 ☐ 2213 DPS
☐ 2214 ☐ 2214 DPS
☐ 2215 ☐ 2215 DPS

2. SPECIFY HAND

☐ RH
☐ LH

3. SPECIFY FINISH

☐ Standard Powder Coat _____
Aluminum, Dark Bronze, Statuary, Light Bronze, Black, Brass.

Closer will be shipped with:
– TWO PIECE FINISH PLATE,
– STANDARD SECURITY ARM,
– SECURITY TRACK ROLLER,
– SECURITY TRACK,
– TORX MACHINE SCREW PACK,
unless options listed below are selected.

CLOSER OPTIONS

CYLINDER

☐ Advanced Variable Backcheck (AVB)

FINISH

☐ Custom Powder Coat (RAL) _____
☐ Plated Finish, US _____
☐ SRI primer (excludes DPS) (use with powder coat finishes only)

SPECIAL TEMPLATE

☐ ST- _____

NOTE: Installation of this closer requires T-27, T-25 and T-15 driver bits for TORX machine screws with a security pin. Sold separately.

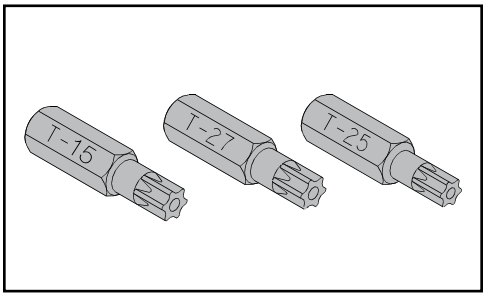

PHONE 877-671-7011
FAX 800-248-1460
www.allegion.com/us
4/15 009426

4210 SERIES

FEATURES

PARALLEL ARM (PUSH SIDE) MOUNT

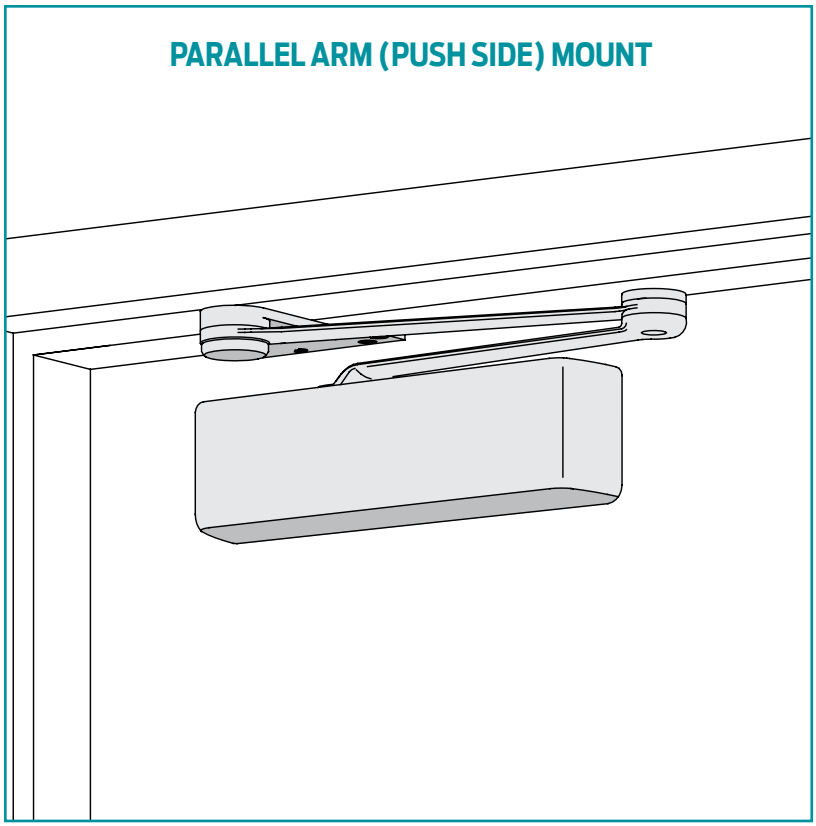

The 4210 SMOOTHEE® Series is a heavy duty, high security closer with special components to minimize tampering and vandalism. Forged steel parallel arms and heavy gauge metal security covers are designed for correctional, vandal prone, institutional and other high traffic applications. The closer has passed 10 million cycles in independent testing. A choice of finishes and cylinder functions meet correctional and vandal resistant requirements.

- Standard 4210 series closer shipped with EXTRA DUTY arm (non hold-open), metal security cover, and TORX Machine Screw pack. For options, see 4210 Series page 9.
- Sized cylinders for interior doors to 5´0˝ and exterior doors to 4´0˝.
- Non-sized cylinder adjustable for interior doors to 4´6˝ and exterior doors to 3´6˝.
- Closer mounts parallel arm, specify right or left swinging door.
- 4211 cylinder meets ADA requirements. See 4210 Series page 10.
- Standard or optional custom powder coat finish.
- Optional SRI primer for installations in corrosive conditions. (Available with powder coat finishes only).
- The 4210 Series is UL listed with EDA or CUSH arms for self-closing doors.
- Tested and certified under ANSI Standard A156.4, grade one.



The 4211 Series includes the
LCN® "Green Dial" Spring Force Indicator

MOUNTING				FINISH		COVER		CYLINDER							*ARM FUNCTION		
HINGE(PULL) SIDE	PARALLEL ARM (PUSH)	STOP FACE	CONCEALED (FRAME)	POWDER COAT	PLATED	PLASTIC	METAL	HANDED	NON-SIZED	SIZED	ACCESSIBILITY	DELAYED ACTION	AVB**	DPS SWITCH	STANDARD (SINGLE)	EDA	CUSH/HCUSH
○	●	○	○	●	●	○	●	●	●	●	♿	●	●	○	○	180°	110°

● AVAILABLE
○ NOT AVAILABLE

♿ *Closer available with less than 5.0 lbs. opening force on 36˝ door.*
* *Maximum opening with standard template. See individual closer series for degrees of opening per installation.*
** *Advanced Variable Backcheck.*

PHONE 877-671-7011
FAX 800-248-1460
www.allegion.com/us
4/15 009426

4210 SERIES

MOUNTING DETAILS

PARALLEL ARM (PUSH SIDE) MOUNTING

MAXIMUM OPENING

EDA arm can be templated for
100º,
Ⓐ = 5-15/16″ (151 mm)
Ⓑ = 7-1/4″ (184 mm)
140º,
Ⓐ = 4-7/16″ (113 mm)
Ⓑ = 5-3/4″ (146 mm)
or 180º.
Ⓐ = 2-15/16″ (75 mm)
Ⓑ = 4-1/4″ (108 mm)
CUSH arm can be templated for maximum opening at
85º,
Ⓐ = 8-5/16″ (211 mm)
Ⓑ = 9-5/8″ (244 mm)
90º,
Ⓐ = 7-11/16″ (195 mm)
Ⓑ = 9″ (229 mm)
100º,
Ⓐ = 6-7/16″ (164 mm)
Ⓑ = 7-3/4″ (197 mm)
or 110º.
Ⓐ = 5-9/16″ (141 mm)
Ⓑ = 6-7/8″ (175 mm)
Hold-open point at maximum opening with H-CUSH arm.

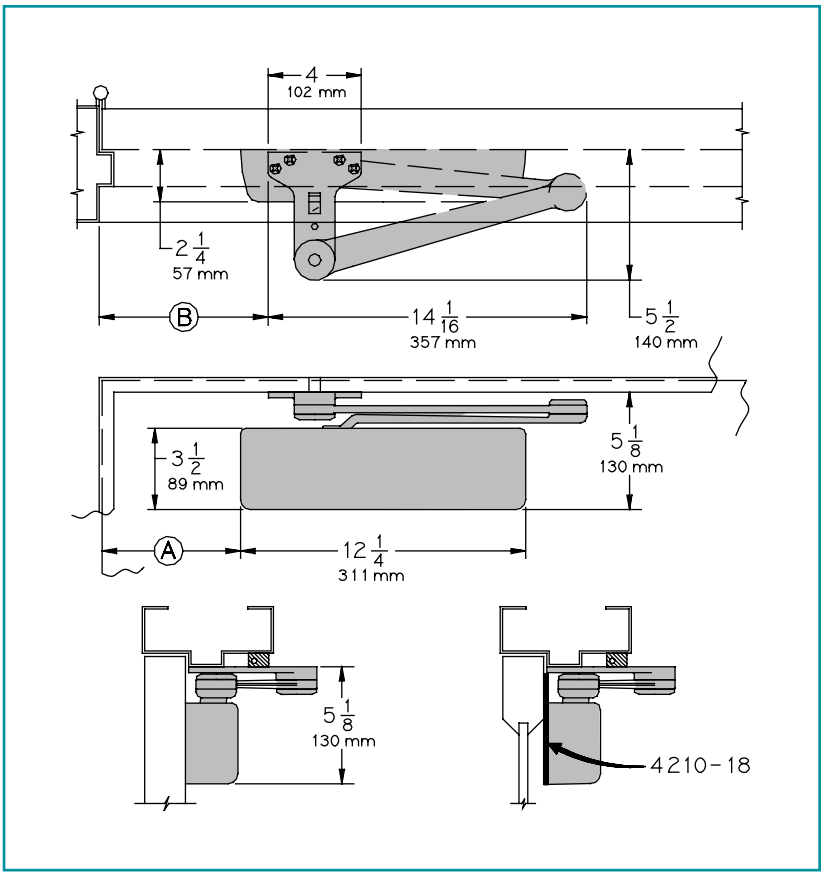

- **Butt Hinges** should not exceed 5″ (127 mm) in width.
- **Auxiliary Stop** is recommended where the door cannot swing 180º or where CUSH arms not used.
- **Clearance** for EDA or CUSH is 5-1/2″ (140 mm) from push side of door.
- **Top Rail** less than 5-1/8″ (130 mm) measured from stop, requires PLATE 4210-18. Plate requires 2″ (51 mm) minimum top rail.
- **Stop Width** 2-3/4″ (70 mm) recommended. Less than 1″ (25mm), consult factory.
- **Delay Action** Add suffix "DEL" to selected cylinder (eg. 4211DEL). Not available with 4215 or 4216 cylinder. Delays closing from maximum opening to approximately 70º. Delays time adjustable up to approximately 1 minute.
- **Advanced Variable Backcheck** cylinder starts backcheck at approximately 45º instead of the normal 75º. Add suffix "AVB" to selected cylinder (eg. 4211 AVB).

Options

- Sized or non-sized cylinder.
- Delayed Action or Advanced Variable Backcheck cylinder.
- CUSH or H-CUSH arm.

Special Templates

Customized installation templates or products may be available to solve unusual applications. Contact LCN Product Support for assistance.

PHONE 877-671-7011
FAX 800-248-1460
www.allegion.com/us
4/15 009426

CYLINDERS

CYLINDER, 4210-3071
Standard, handed cast iron cylinder assembly.
For various applications see "Table of Sizes" on 4210 Series page 10.

COVER

SECURITY COVER, 4210-72MC
Standard, handed heavy gauge metal security cover.
Four point mounting for extra security.
Closer adjustments not accessible with cover installed.

ARMS

EXTRA DUTY ARM, 4210-3077EDA
Non-handed parallel arm features solid forged steel main arm and forearm for potentially abusive installations.
Double slab arm/pinion attachment for maximum strength.

CUSH-N-STOP® (CUSH) ARM, 4210-3077CNS
Non-handed parallel arm features solid forged steel main arm and forearm with built-in stop in soffit shoe.
Double slab arm/pinion attachment for maximum strength.

HCUSH ARM, 4210-3049CNS
Non-handed arm provides hold-open function with templated stop/hold-open points.
Handle controls hold-open function.
HCUSH arm not available with 4216 cylinder.
Double slab arm/pinion attachment for maximum strength.

INSTALLATION ACCESSORIES

PLATE, 4210-18, 4210-18CUSH
Required for push side mount where top rail is less than 5-1/8″ (130 mm), measured from the stop.
Plate requires 2" (51 mm) minimum top rail measured from the stop. Plate also used with Cush arm installations.

CUSH SHOE SUPPORT, 4210-30
Provide anchorage for fifth screw used with CUSH arms where reveal is less than 3-1/16″ (78mm).

BLADE STOP SPACER, 4210-61
Lowers parallel arm shoe to clear 1/2″ (13 mm) blade stop.

PA FLUSH PANEL ADAPTER, 4210-419
Provides horizontal mounting surface for EDA or CUSH shoe on single rabetted or flush frame.

3071

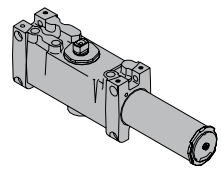

72MC

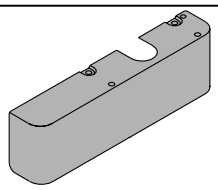

3077EDA

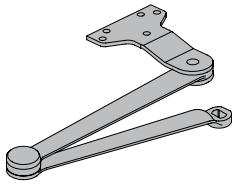

3077CNS

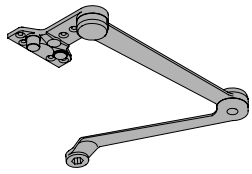

3049CNS

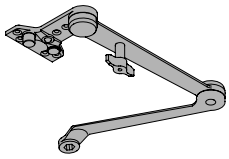

18
18CUSH

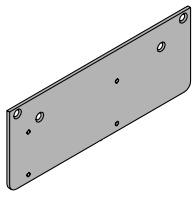

30 61

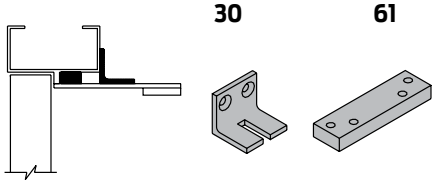

419

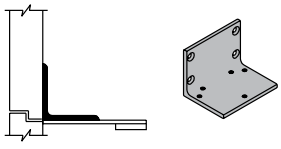

PHONE 877-671-7011
FAX 800-248-1460
www.allegion.com/us
4/15 009426

4210 SERIES

ORDERING INFORMATION

TABLE OF SIZES

Select closer based on width of door.
The spring power of non-sized 4211 cylinder is adjustable from size 1 through size 5 and is shipped set to size 3.
Sized 4210 Series cylinder available in size 6.
Delayed action not available with 4216 cylinder.

EXTERIOR (and VESTIBULE) DOOR

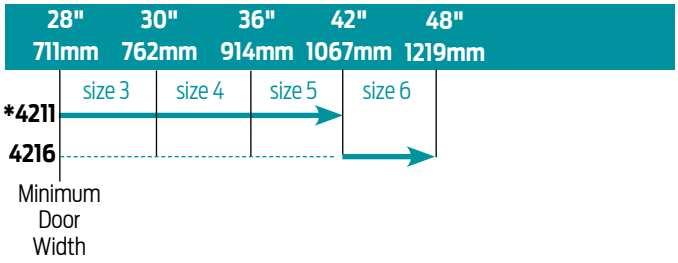

** Adjustable Size 1 thru 5*

INTERIOR DOOR WIDTH

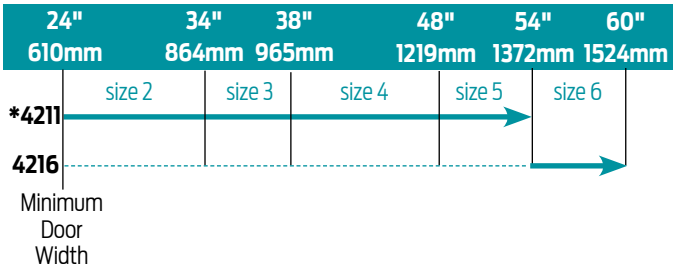

** Adjustable Size 1 thru 5*

→ Indicates recommended range of door width for closer size.

REDUCED OPENING FORCE 4210 CLOSERS

CAUTION ! Any manual door closer, including those certified by BHMA to conform to ANSI Standard A156.4, that is selected, installed and adjusted based on ADA or other reduced opening force requirements may not provide sufficient power to reliably close and latch a door.

Refer to POWER OPERATORS section for information on systems that meet reduced opening force requirements without affecting closing power.

	DOOR WIDTH	36"	42"	48"
♿	8.5* lbs.	4211	4211	4211
	5.0* lbs.	4211	4211	4211

** Maximum opening force.*

HOW-TO-ORDER 4210 SERIES CLOSERS

1. SELECT CYLINDER SIZE
- ☐ 4211 (adjustable from size 1 to 5)
- ☐ 4216 (DEL or HCUSH arm not available)

2. SPECIFY HAND
- ☐ RH
- ☐ LH

3. SPECIFY FINISH
- ☐ Standard Powder Coat _____
  Aluminum, Dark Bronze, Statuary, Light Bronze, Black, Brass.

Closer will be shipped with:
– SECURITY COVER,
– EXTRA DUTY ARM,
– TORX MACHINE SCREW PACK,
unless options listed below are selected.

CLOSER OPTIONS

CYLINDER
- ☐ Delayed Action (DEL)
- ☐ Advanced Variable Backcheck (AVB)

FINISH
- ☐ Custom Powder Coat (RAL) _____
- ☐ Plated Finish, US _____
- ☐ SRI primer (use with powder coat finishes only)

ARMS
- ☐ Cush-N-Stop arm (CUSH)
- ☐ HCush-N-Stop arm (HCUSH)

SCREW PACK
- ☐ TB* and TORX Machine Screw (TBTRX)
  * Specify door thickness if other than 1-3/4".

INSTALLATION ACCESSORIES
- ☐ PLATE, 4210-18
- ☐ PLATE, 4210-18CUSH

SPECIAL TEMPLATE
- ☐ ST- _____

NOTE: Installation of this closer requires T-27 and T-25 driver bits for TORX machine screws with a security pin. Sold separately.

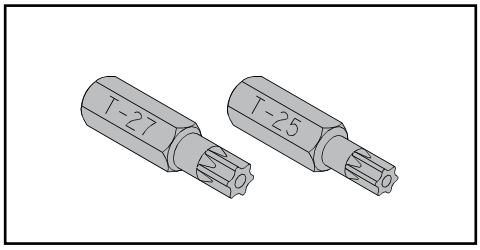

PHONE 877-671-7011
FAX 800-248-1460
www.allegion.com/us
4/15 009426

4210T SERIES

FEATURES

STOP FACE (PUSH SIDE) MOUNT

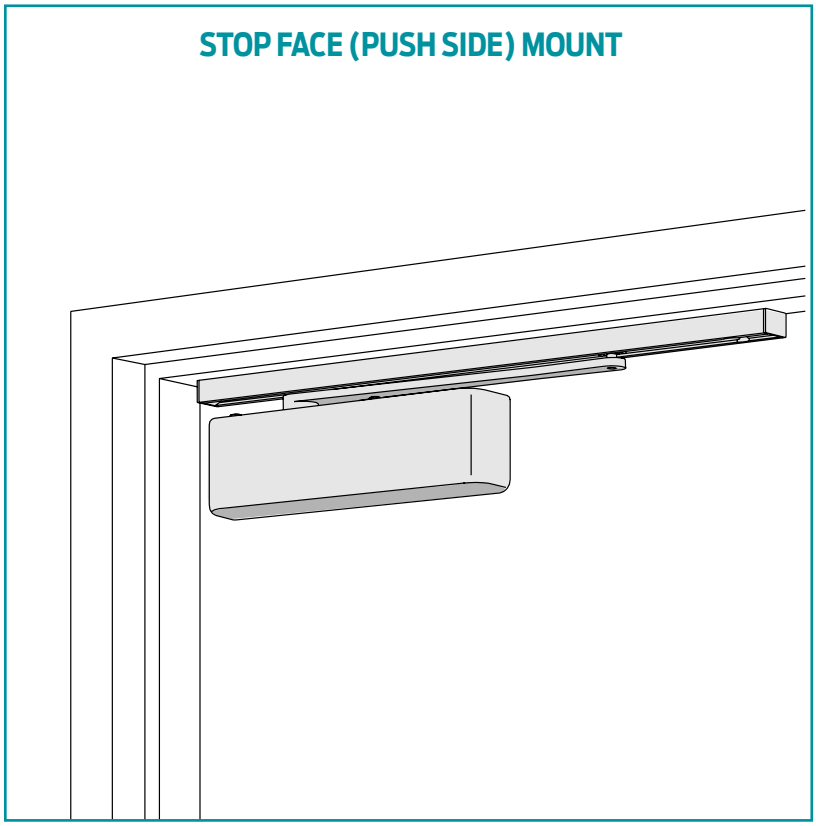

The 4210T SMOOTHEE® Series is a heavy duty, high security track closer with special components to minimize tampering and vandalism. Forged steel arms and heavy gauge metal security covers are designed for correctional, vandal prone, institutional and other high traffic interior applications. The closer has passed 10 million cycles in independent testing. A choice of finishes and cylinder functions meet correctional and vandal resistant requirements.

- Standard 4210T Series closer shipped with standard arm, security track (non hold-open), metal security cover, and TORX Machine Screw pack. See 4210T Series page 13 for options.
- Sized cylinders for interior doors to 4´0˝.
- Closer mounts on push side of the door, track mounts to frame stop. Specify right or left swinging door.
- 4211T cylinder meets ADA requirements. See 4210T Series page 14.
- Standard or optional custom powder coat finish.
- Optional SRI primer for installations in corrosive conditions. (Available with powder coat finishes only).
- The 4210T Series is UL listed for self-closing doors.
- Tested and certified under ANSI Standard A156.4, grade one.

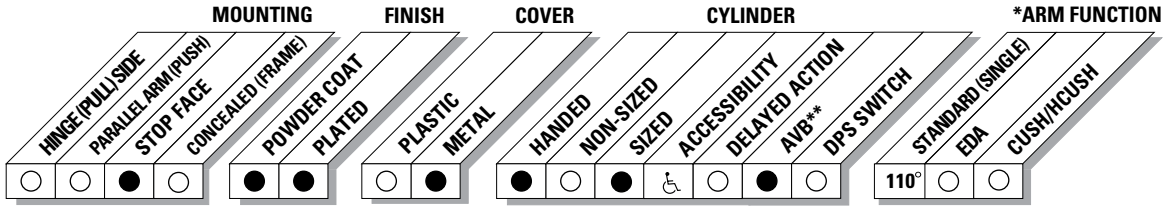

● AVAILABLE
○ NOT AVAILABLE

♿ *Closer available with less than 5.0 lbs. opening force on 36˝ door.*
* *Maximum opening with standard template.*
** *Advanced Variable Backcheck.*

PHONE 877-671-7011
FAX 800-248-1460
www.allegion.com/us
4/15 009426

4210T SERIES

MOUNTING DETAILS

STOP FACE (PUSH SIDE) MOUNTING

MAXIMUM OPENING

Templating allows 110º.

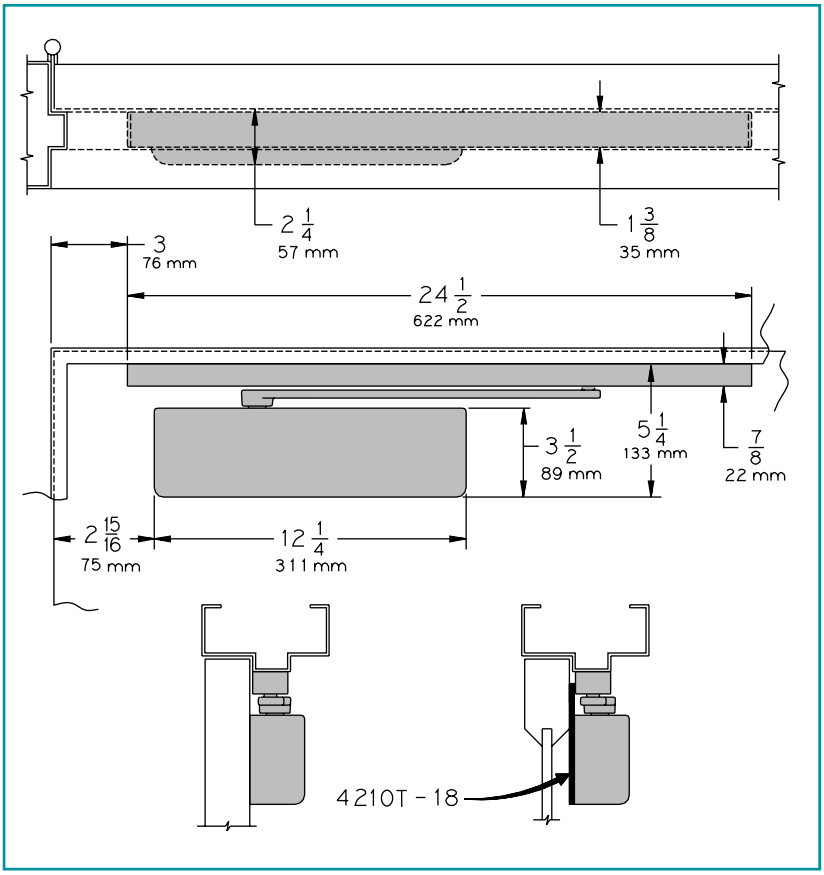

- **Butt Hinges** should not exceed 5″ (127 mm) in width.
- **Auxiliary Stop** is recommended where the door cannot swing 110º.
- **Clearance** is 2-1/4″ (57 mm) from door.
- **Top Rail** less than 5-1/4″ (133 mm) measured from stop, requires PLATE 4210T-18. Plate requires 2-1/4″ (57mm) minimum measured from the stop.
- **Stop Width** minimum 1-3/8″ (35 mm).
- **Advanced Variable Backcheck** cylinder starts backcheck at approximately 45º instead of the normal 75º. Add suffix "AVB" to selected cylinder (eg. 4213T AVB).

Options

- Advanced Variable Backcheck cylinder.

Special Templates

Customized installation templates or products may be available to solve unusual applications. Contact LCN Product Support for assistance.

PHONE 877-671-7011
FAX 800-248-1460
www.allegion.com/us
4/15 009426

4210T SERIES

CYLINDERS

CYLINDER, 4210T-3071

Standard, handed cast iron cylinder assembly. For various applications see “Table of Sizes” on 4210T Series page 14.

3071

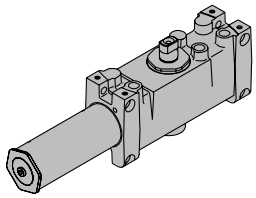

COVER

SECURITY COVER, 4210T-72MC

Handed, heavy gauge metal security cover.
Four point TORX mounting for extra security.
Closer adjustments not accessible with cover installed.

72MC

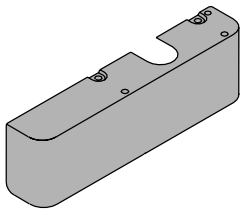

ARM

STANDARD SECURITY ARM, 4210T-3077T

Handed arm closer features solid forged steel, large cross section arm. Special threaded attachment of track roller for extra security. Double slab arm/pinion attachment for maximum strength. Can only be used with high security track roller, 4210T-3034.

3077T

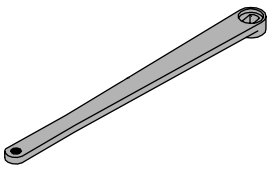

TRACK

SECURITY TRACK, 4210T-3038

Non-handed, high security track.
Designed to eject foreign objects placed in track during either opening or closing motion.
Requires track roller, 4210T-3034.

3038

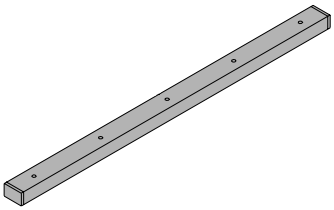

SECURITY TRACK ROLLER, 4210T-3034

Low friction track roller threads into 4210T-3077 arm for extra strength and security.
Can not be removed without disconnecting arm from closer.

3034

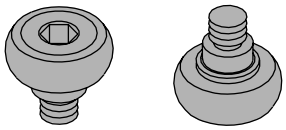

INSTALLATION ACCESSORIES

PLATE, 4210T-18

Required where top rail, when measured from the stop, is less than 5-1/4″ (133 mm).
Plate requires 2-1/4″ (57 mm) minimum top rail measured from the stop.

18

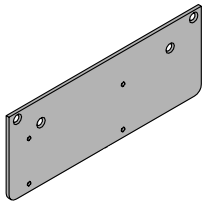

PHONE 877-671-7011
FAX 800-248-1460
www.allegion.com/us
4/15 009426

4210T SERIES

ORDERING INFORMATION

TABLE OF SIZES

Select closer based on width of door.
4210T series cylinders available in size 1, 3 or 4.
Closing power of all 4210T Series closers may be increased 15%.

INTERIOR DOOR WIDTH

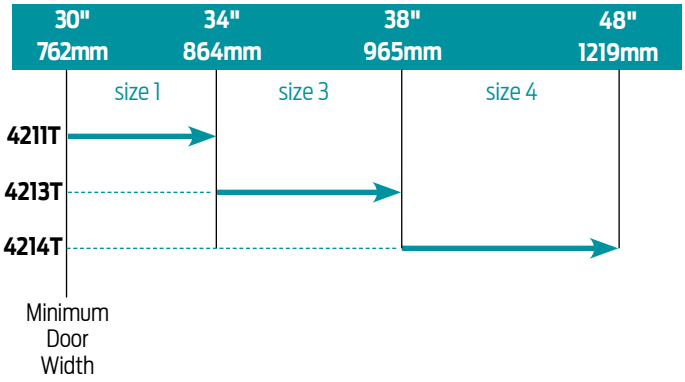

→ Indicates recommended range of door width for closer size.

Note: Minimum door width 30" (762mm).

REDUCED OPENING FORCE 4210T CLOSERS

CAUTION ! Any manual door closer, including those certified by BHMA to conform to ANSI Standard A156.4, that is selected, installed and adjusted based on ADA or other reduced opening force requirements may not provide sufficient power to reliably close and latch a door.

Refer to POWER OPERATORS section for information on systems that meet reduced opening force requirements without affecting closing power.

	DOOR WIDTH	36"	42"	48"
♿	8.5* lbs.	4213T	4213T	4213T
	5.0* lbs.	4211T	4211T	4211T

** Maximum opening force.*

HOW-TO-ORDER 4210T SERIES CLOSERS

1. SELECT CYLINDER SIZE

- ☐ 4211T (ADA)
- ☐ 4213T
- ☐ 4214T

2. SPECIFY HAND

- ☐ RH
- ☐ LH

3. SPECIFY FINISH

- ☐ Standard Powder Coat _____
  Aluminum, Dark Bronze, Statuary, Light Bronze, Black, Brass.

Closer will be shipped with:

– SECURITY COVER,
– STANDARD SECURITY ARM,
– SECURITY TRACK ROLLER,
– SECURITY TRACK,
– TORX MACHINE SCREW PACK,
unless options listed below are selected.

CLOSER OPTIONS

CYLINDER

- ☐ Advanced Variable Backcheck (AVB)

FINISH

- ☐ Custom Powder Coat (RAL) _____
- ☐ Plated Finish, US _____
- ☐ SRI primer (use with powder coat finishes only)

SCREW PACK

- ☐ TB* and TORX Machine Screw (TBTRX)
  * Specify door thickness if other than 1-3/4".

INSTALLATION ACCESSORIES

- ☐ PLATE, 4210T-18

SPECIAL TEMPLATE

- ☐ ST- _____

NOTE: Installation of this closer requires T-27 and T-25 driver bits for TORX machine screws with a security pin. Sold separately.

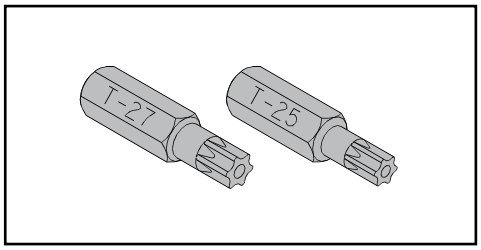

PHONE 877-671-7011
FAX 800-248-1460
www.allegion.com/us
4/15 009426

4510 SERIES

FEATURES

HINGE (PULL) SIDE MOUNT

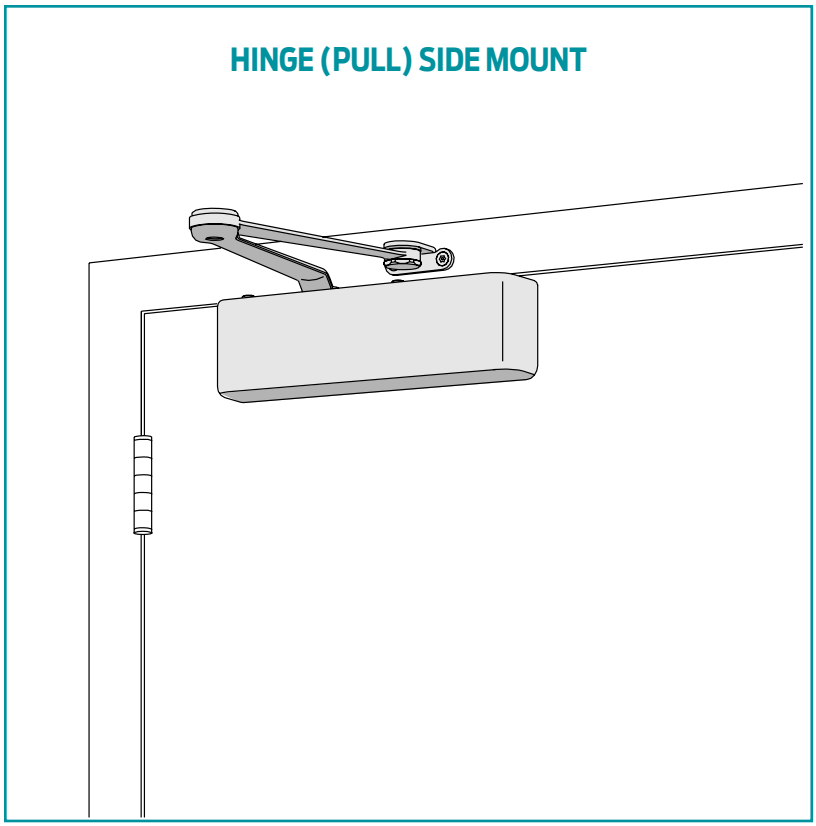

The 4510 SMOOTHEE® Series is a heavy duty, high security closer with special components to minimize tampering and vandalism. Forged steel double lever arms and heavy gauge metal security covers are designed for correctional, vandal prone, institutional and other high traffic applications. The closer has passed 10 million cycles in independent testing. A choice of finishes and cylinder functions meet correctional and vandal resistant requirements.

- Standard 4510 Series closer shipped with extra duty arm (non hold-open), metal security cover, and TORX Machine Screw pack. See 4510 Series page 17 for options.
- Sized cylinders for interior doors to 5´0˝ and exterior doors to 4´0˝.
- Non-sized cylinder adjustable for interior doors to 4´6˝ and exterior doors to 3´6˝.
- Closer mounts hinge side, specify right or left swinging door.
- 4511 cylinder meets ADA requirements. See 4510 Series page 18.
- Standard or optional custom powder coat finish.
- Optional SRI primer for installations in corrosive conditions. (Available with powder coat finishes only).
- The 4510 Series is UL listed for self-closing doors.
- Tested and certified under ANSI Standard A156.4, grade one.



The 4511 Series includes the **LCN® "Green Dial" Spring Force Indicator**

MOUNTING				FINISH		COVER		CYLINDER							*ARM FUNCTION		
HINGE (PULL) SIDE	PARALLEL ARM (PUSH)	STOP FACE	CONCEALED (FRAME)	POWDER COAT	PLATED	PLASTIC	METAL	HANDED	NON-SIZED	SIZED	ACCESSIBILITY	DELAYED ACTION	AVB**	DPS SWITCH	STANDARD (SINGLE)	EDA	CUSH/HCUSH
●	○	○	○	●	●	○	●	●	●	●	♿	●	●	○	○	140°	○

● AVAILABLE
○ NOT AVAILABLE

♿ *Closer available with less than 5.0 lbs. opening force on 36˝ door.*
* *Maximum opening with standard template.*
** *Advanced Variable Backcheck.*

PHONE 877-671-7011
FAX 800-248-1460
www.allegion.com/us
4/15 009426

4510 SERIES

HINGE (PULL) SIDE MOUNTING

MAXIMUM OPENING

Can be templated for 140º.

Ⓐ = 4-3/16" (106 mm)
Ⓑ = 9-7/8" (251 mm)

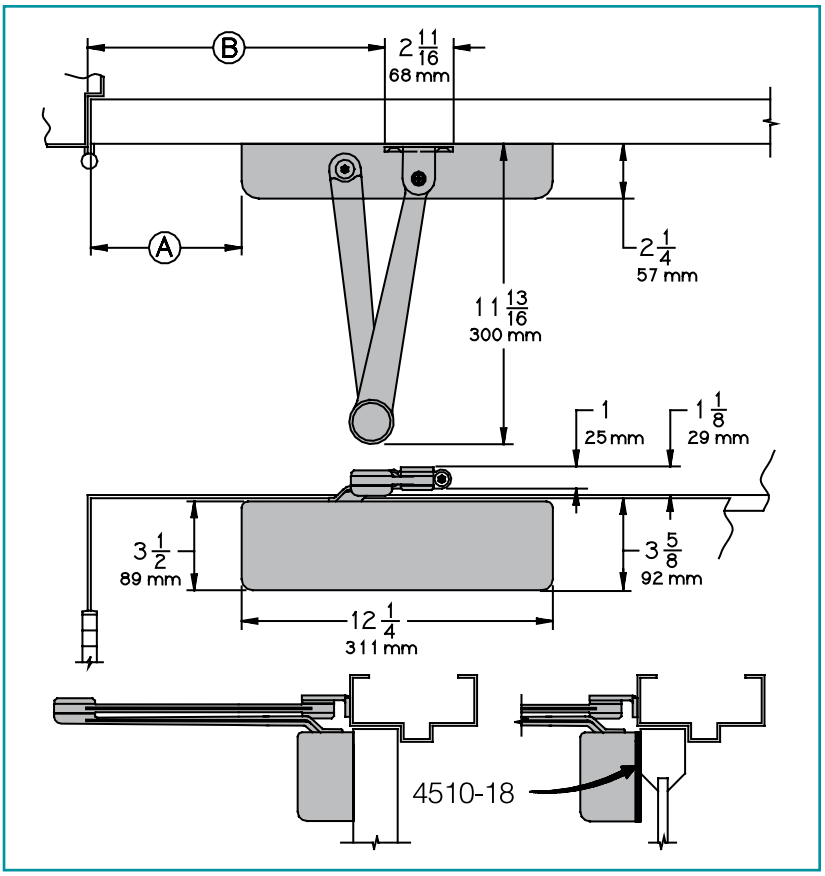

- **Butt Hinges** should not exceed 5˝ (127 mm) in width.
- **Auxiliary Stop** is recommended where a door cannot swing 140º.
- **Reveal** should not exceed 1/8˝ (3 mm).
- **Top Rail** less than 3-1/2˝ (89 mm), requires PLATE 4510-18. Plate requires 2˝ (51mm) minimum top rail.
- **Head frame** less than 1˝ (25 mm), consult factory.
- **Clearance** of 2-1/4˝ (57 mm) behind door required for installation.
- **Arm Clearance** above door 1-1/8˝ (29 mm) required.
- **Delay Action** Add suffix "DEL" to selected cylinder. Not available with 4516 cylinder. Delays closing from maximum opening to approximately 70º. Delay time adjustable up to approximately 1 minute.
- **Advanced Variable Backcheck** cylinder starts backcheck at approximately 45º instead of the normal 75º. Add suffix "AVB" to selected cylinder.

Options

- Sized or non-sized cylinder.
- Delayed action or Advanced Variable Backcheck cylinder.

Special Templates

Customized installation templates or products may be available to solve unusual applications. Contact LCN Product Support for assistance.

PHONE 877-671-7011
FAX 800-248-1460
www.allegion.com/us
4/15 009426

CYLINDERS

CYLINDER, 4510-3071
Standard, handed cast iron cylinder assembly.
For various applications see "Table of Sizes" on 4510 Series page 18.

3071

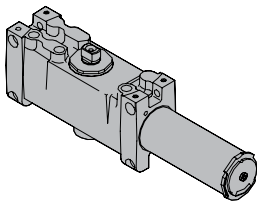

COVER

SECURITY COVER, 4510-72MC
Standard, handed, heavy gauge metal security cover.
Four point mounting for extra security.
Closer adjustments not accessible with cover installed.

72MC

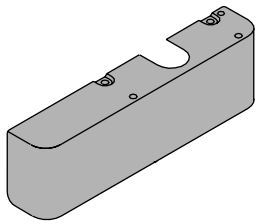

ARM

EXTRA DUTY ARM, 4510-3077EDA
Non-handed arm, features solid forged steel main arm and forearm for potentially abusive installations.
Double slab arm/pinion attachment for maximum strength.

3077EDA

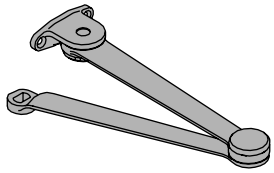

INSTALLATION ACCESSORIES

PLATE, 4510-18
Required where top rail is less than 3-1/2″ (89 mm).
Plate requires minimum 2″ (51 mm) top rail.

18

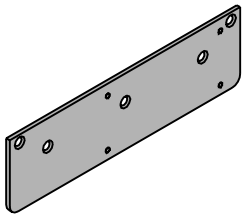

PHONE 877-671-7011
FAX 800-248-1460
www.allegion.com/us
4/15 009426

4510 SERIES

ORDERING INFORMATION

TABLE OF SIZES

Select closer based on width of door.
The spring power of non-sized 4511 cylinder is adjustable from size 1 through size 5 and is shipped set to size 3.
Sized 4510 Series cylinder available in size 6.
Delayed action not available with 4516 cylinder.

EXTERIOR (and VESTIBULE) DOOR

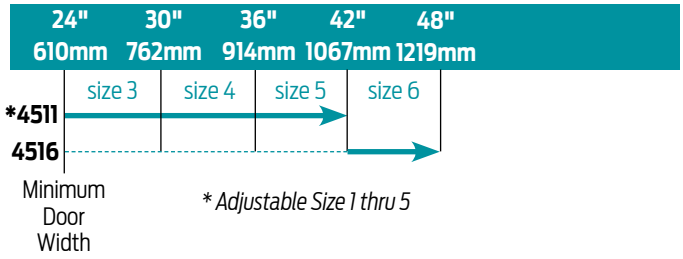

INTERIOR DOOR WIDTH

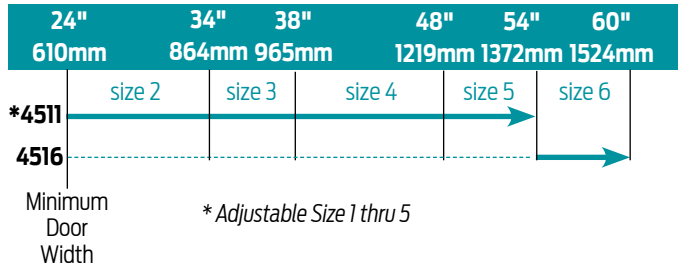

→ Indicates recommended range of door width for closer size.

REDUCED OPENING FORCE 4510 CLOSERS

CAUTION ! Any manual door closer, including those certified by BHMA to conform to ANSI Standard A156.4, that is selected, installed and adjusted based on ADA or other reduced opening force requirements may not provide sufficient power to reliably close and latch a door.

Refer to POWER OPERATORS section for information on systems that meet reduced opening force requirements without affecting closing power.

	DOOR WIDTH	36"	42"	48"
♿	8.5* lbs.	4511	4511	4511
	5.0* lbs.	4511	4511	4511

** Maximum opening force.*

HOW-TO-ORDER 4510 SERIES CLOSERS

1. SELECT CYLINDER SIZE
- ☐ 4511 (adjustable from size 1 to 5)
- ☐ 4516 (DEL not available)

2. SPECIFY HAND
- ☐ RH
- ☐ LH

3. SPECIFY FINISH
- ☐ Standard Powder Coat _____
  Aluminum, Dark Bronze, Statuary, Light Bronze, Black, Brass.

Closer will be shipped with:
– SECURITY COVER,
– EXTRA DUTY ARM,
– TORX MACHINE SCREW PACK,
unless options listed below are selected.

CLOSER OPTIONS

CYLINDER
- ☐ Delayed Action (DEL)
- ☐ Advanced Variable Backcheck (AVB)

FINISH
- ☐ Custom Powder Coat (RAL) _____
- ☐ Plated Finish, US _____
- ☐ SRI primer (use with powder coat finishes only)

SCREW PACK
- ☐ TB* and TORX Machine Screw (TBTRX)
  * Specify door thickness if other than 1-3/4".

INSTALLATION ACCESSORIES
- ☐ PLATE, 4510-18

SPECIAL TEMPLATE
- ☐ ST- _____

NOTE: Installation of this closer requires T-27 and T-25 driver bits for TORX machine screws with a security pin. Sold separately.

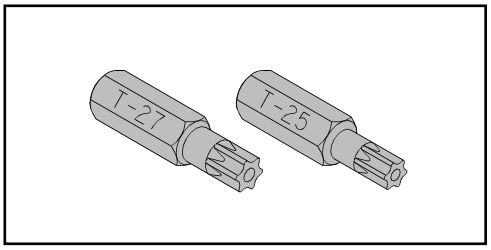

PHONE 877-671-7011
FAX 800-248-1460
www.allegion.com/us
4/15 009426

4510T SERIES

FEATURES

HINGE (PULL) SIDE MOUNT

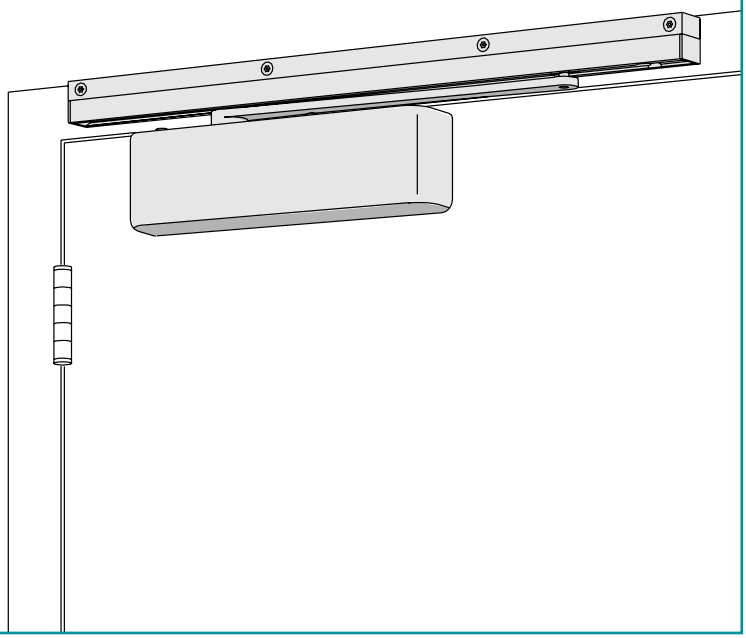

The 4510T SMOOTHEE® Series is a heavy duty, high security track closer with special components to minimize tampering and vandalism. Forged steel single lever arm and heavy gauge metal security cover are designed for correctional, vandal prone, institutional and other high traffic interior applications. The closer has passed 10 million cycles in independent testing. A choice of finishes and cylinder functions meet correctional and vandal resistant requirements.

- Standard 4510T Series closer shipped with standard arm, security track. (non hold-open), track roller, metal security cover, and TORX Machine Screw pack. See 4510T Series page 21 for options.
- Sized cylinders for interior doors to 4´0˝.
- Closer mounts hinge side, specify right or left swinging door.
- 4511T cylinder meets ADA requirements. See 4510T Series page 22.
- Standard or optional custom powder coat finish.
- Optional SRI primer for installations in corrosive conditions. (Available with powder coat finishes only).
- The 4510T Series is UL listed for self-closing doors.
- Tested and certified under ANSI Standard A156.4, grade one.

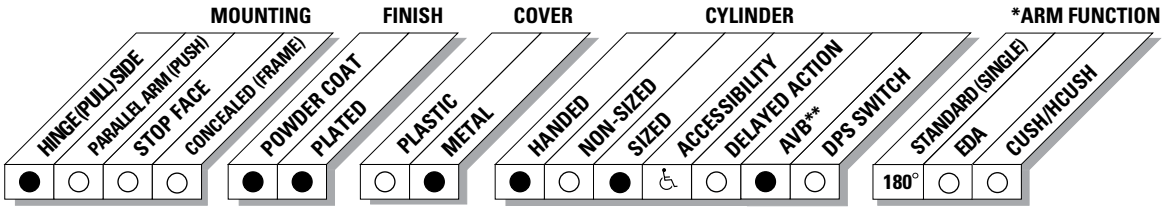

● AVAILABLE
○ NOT AVAILABLE

♿ *Closer available with less than 5.0 lbs. opening force on 36˝ door.*
* *Maximum opening with standard template.*
** *Advanced Variable Backcheck.*

PHONE 877-671-7011
FAX 800-248-1460
www.allegion.com/us
4/15 009426

4510T SERIES

HINGE (PULL) SIDE MOUNTING

MAXIMUM OPENING

Templating allows 180º.

Consult factory if door will be held open at 180º.

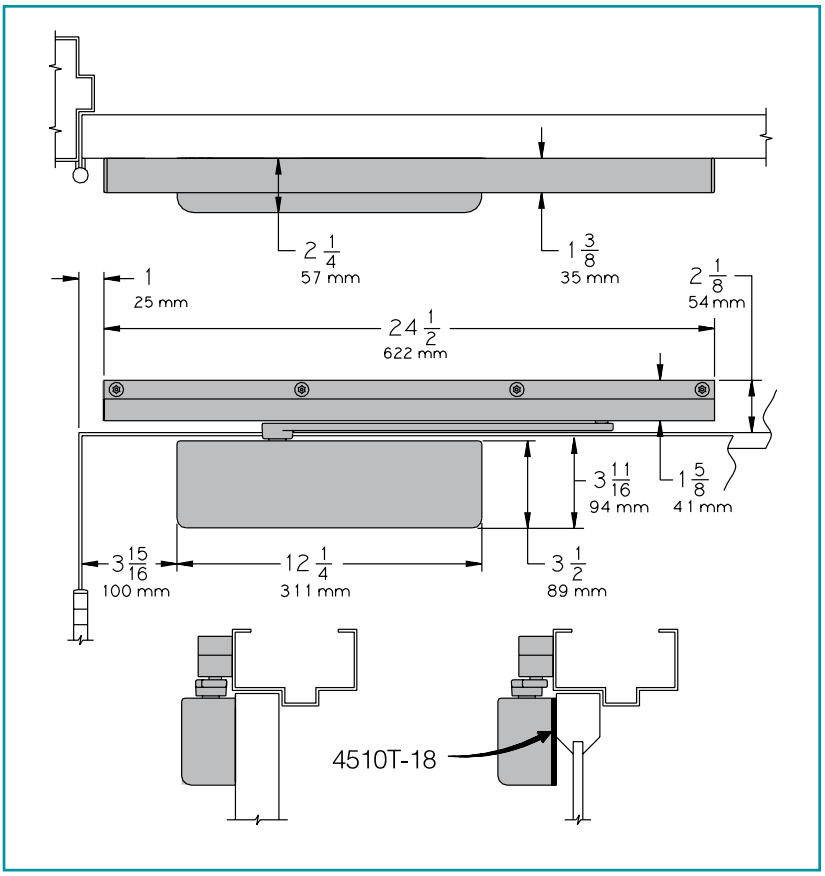

- Butt Hinges should not exceed 5″ (127 mm) in width.
- Auxiliary Stop is recommended where a door cannot swing 180º.
- Reveal should not exceed 1/8″ (3 mm).
- Top Rail less than 3-3/4″ (95 mm), requires PLATE 4510T-18. Plate requires 2″ (51 mm) minimum top rail.
- Head Frame minimum 2-1/8" (54 mm).
- Clearance of 2-1/4″ (57 mm) behind door required for installation.
- Advanced Variable Backcheck cylinder starts backcheck at approximately 45º instead of the normal 75º. Add suffix "AVB" to selected cylinder (eg. 4513T AVB).

Options

- Advanced Variable Backcheck cylinder.

Special Templates

Customized installation templates or products may be available to solve unusual applications. Contact LCN Product Support for assistance.

PHONE 877-671-7011
FAX 800-248-1460
www.allegion.com/us
4/15 009426

4510T SERIES

CYLINDERS

CYLINDER, 4510T-3071
Standard, handed cast iron cylinder assembly.
For various applications see "Table of Sizes" on 4510T Series page 22.

3071

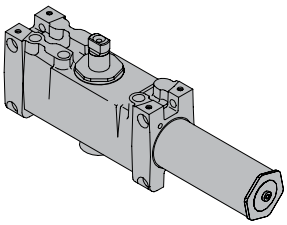

COVER

SECURITY COVER, 4510T-72MC
Handed, heavy gauge metal security cover.
Four point TORX mounting for extra security.
Closer adjustments not accessible with cover installed.

72MC

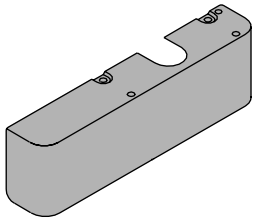

ARM

STANDARD SECURITY ARM, 4510T-3077T
Handed arm features solid forged steel, large cross section arm.
Special threaded attachment of track roller for potentially abusive installations.
Double slab arm/pinion attachment for maximum strength.
Can only be used with high security track roller, 4510T-3034.

3077T

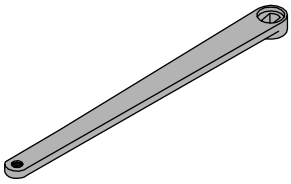

TRACK

SECURITY TRACK, 4510T-3038
Non-handed, high security track.
Designed to eject foreign objects placed in track during either opening or closing motion.
Requires track roller, 4510T-3034.

3038

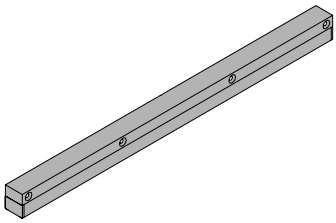

SECURITY TRACK ROLLER, 4510T-3034
Low friction track roller threads into 4510T-3077T arm for extra strength and security.
Can not be removed without disconnecting arm from closer.

3034

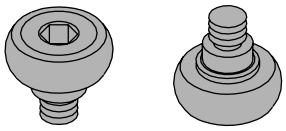

INSTALLATION ACCESSORIES

PLATE, 4510T-18
Required where top rail is less than 3 3/4" (95 mm).
Plate requires minimum 2" (51 mm) top rail.

18

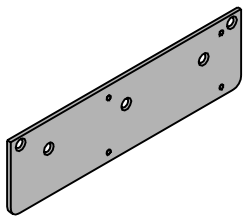

PHONE 877-671-7011
FAX 800-248-1460
www.allegion.com/us
4/15 009426

4510T SERIES

TABLE OF SIZES

Select closer based on width of door.
Sized 4510T Series cylinders available in size 1, 3 or 4.
Closing power of all 4510T Series closers may be increased 15%.

INTERIOR DOOR WIDTH

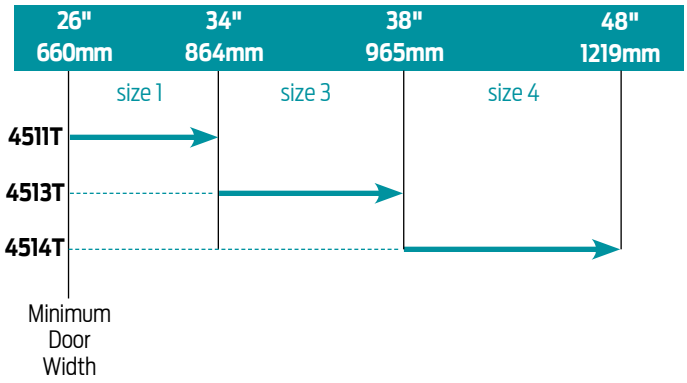

→ Indicates recommended range of door width for closer size.

HOW-TO-ORDER 4510T SERIES CLOSERS

1. SELECT CYLINDER SIZE

- ☐ 4511T (ADA)
- ☐ 4513T
- ☐ 4514T

2. SPECIFY HAND

- ☐ RH
- ☐ LH

3. SPECIFY FINISH

- ☐ Standard Powder Coat _____
  Aluminum, Dark Bronze, Statuary, Light Bronze, Black, Brass.

Closer will be shipped with:

– SECURITY COVER,
– STANDARD SECURITY ARM,
– SECURITY TRACK ROLLER,
– SECURITY TRACK,
– TORX MACHINE SCREW PACK,
unless options listed below are selected.

CLOSER OPTIONS

CYLINDER

- ☐ Advanced Variable Backcheck (AVB)

FINISH

- ☐ Custom Powder Coat (RAL) _____
- ☐ Plated Finish, US _____
- ☐ SRI primer (use with powder coat finishes only)

SCREW PACK

- ☐ TB* and TORX Machine Screw (TBTRX)
  * Specify door thickness if other than 1-3/4".

INSTALLATION ACCESSORIES

- ☐ PLATE, 4510T-18

SPECIAL TEMPLATE

- ☐ ST- _____

NOTE: Installation of this closer requires T-27 and T-25 driver bits for TORX machine screws with a security pin. Sold separately.

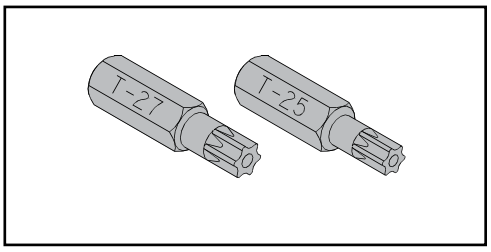

REDUCED OPENING FORCE 4510T CLOSERS

CAUTION ! Any manual door closer, including those certified by BHMA to conform to ANSI Standard A156.4, that is selected, installed and adjusted based on ADA or other reduced opening force requirements may not provide sufficient power to reliably close and latch a door.

Refer to POWER OPERATORS section for information on systems that meet reduced opening force requirements without affecting closing power.

	DOOR WIDTH	36"	42"	48"
	8.5* lbs.	4513T	4513T	4513T
	5.0* lbs.	4511T	4511T	4511T

** Maximum opening force.*

PHONE 877-671-7011
FAX 800-248-1460
www.allegion.com/us
4/15 009426