LCN®
1-800-526-2400

5030 SERIES
INSTALLATION INSTRUCTION SHEET

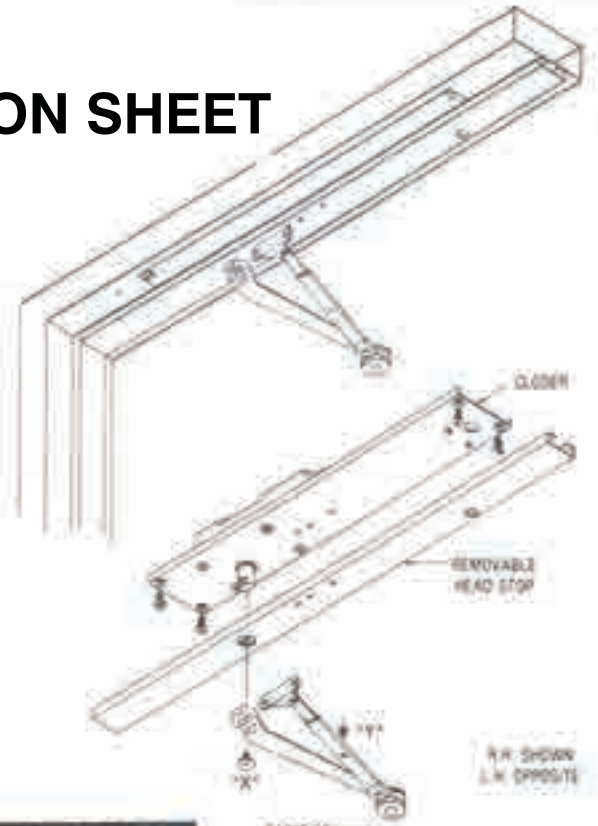

1. Make sure hand of closer and door correspond. Hand of closer is stamped on mounting plate. Hand of closer can not be changed.

2. Determine if door is to be hung on hinges, offset pivots ot center pivots. If frame is not prepared for closer, prepare to dimensions shown on proper template. Note: On butt hinge applications, closer can be templated for 100° or 180° of opening.

3. Install closer in prepared frame with fasteners provided. Be sure mounting plate is flush with soffit. Install head stop.

4. Hang door. Be sure there is no bind or friction. Place main arm on shaft and push up into position. Insert arm screw and tighten securely. Close door and install shoe. Open door slightly and insert rod in forearm. Close door. Starting with main arm at right angle to door, move arm toward latch until holes in rod and tube line up. Insert and tighten screw.

5. **REGULATION**: Door closer regulation is preset at the factory. Adjust as follows only if necessary: A "normal" closing time from a 90° open position is 5 to 7 seconds, evenly divided between main speed and latch speed (see figure below). Use a 3/32" hex wrench to adjust regulating screws. To slow main speed of door, turn middle regulating screw clockwise. To slow latch speed, turn regulating screw closet to hinge clockwise.
BACKCHECK: To increase backcheck intensity, turn regulating screw screw closest to the latch clockwise.
DO NOT USE ABRUPT BACKCHECK. DO NOT USE DOOR CLOSER AS A DOOR STOP.





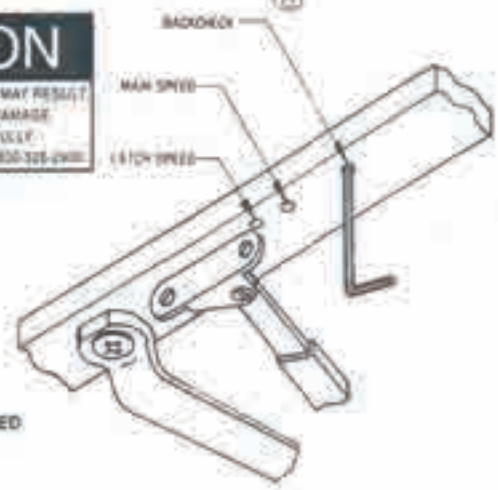

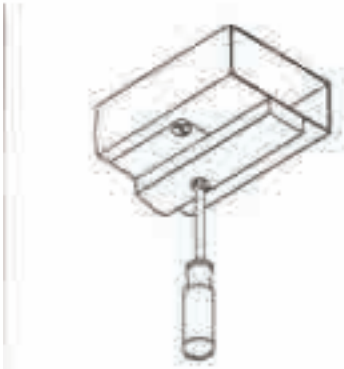

7. To adjust 90° hold-open arm (up to 100° opening). The hold open features is at the elbow. Arm is preset to hold door open at approximately 90°. To change setting, loosen adjusting nut, open door to desired hold open position, tighten adjusting nut.



6. Adjust **CLOSING POWER** only if more power is needed. Closer is shipped with minimum closing power pre-set. To increase **CLOSING POWER** turn spring adjusting screw clockwise. Maximum adjustment 36 turns.

8. To adjust for additional closing power at latch. (Regular & 90° H.O. only)
   A Remove screw "Y" (step 4) and separate rod from tube.
   B Remove shoe screws and turn shoe over.
   C Reassemble arm.



© 2009 SCHLAGE LOCK Company. All rights reserved.

5031
5032
5033
5034
5035
5036
} NON HOLD OPEN (UP TO 100°)
H-90° (UP TO 100°)

AUXILIARY STOP RECOMMENDED

LEFT HAND DOOR AND CLOSER SHOWN, RIGHT HAND OPPOSITE | 6/96

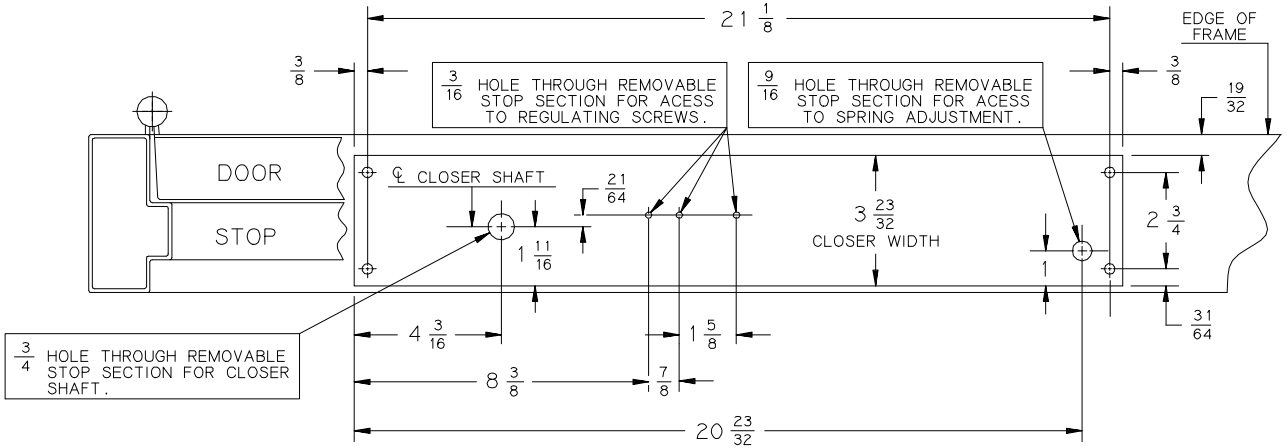

NOTES :

1. FOR DOOR OPENINGS GREATER THAN 100° SEE 5030 (101°TO 180°) TEMPLATE.
2. MAXIMUM STOP THICKNESS 5/8".
3. 1/8" DOOR TO SOFFIT CLEARANCE REQUIRED.
4. REINFORCING PER ANSI/SDI-100 RECOMMENDED FOR HOLLOW METAL DOORS & FRAMES.
5. FOR DOORS THICKER THAN 1 3/4" CONSULT LCN.

AN ALUMINUM COMBINATION MOUNTING AND FINISH PLATE IS INCLUDED AS PART OF THE CLOSER. AN APPLIED REMOVABLE HEADSTOP MUST BE USED AND MOUNTED BETWEEN SIDE STOPS FOR REMOVABILITY. MOUNTING SCREW HOLES FOR REMOVABLE HEADSTOP MUST SPAN CLOSER MOUNTING/FINISH PLATE

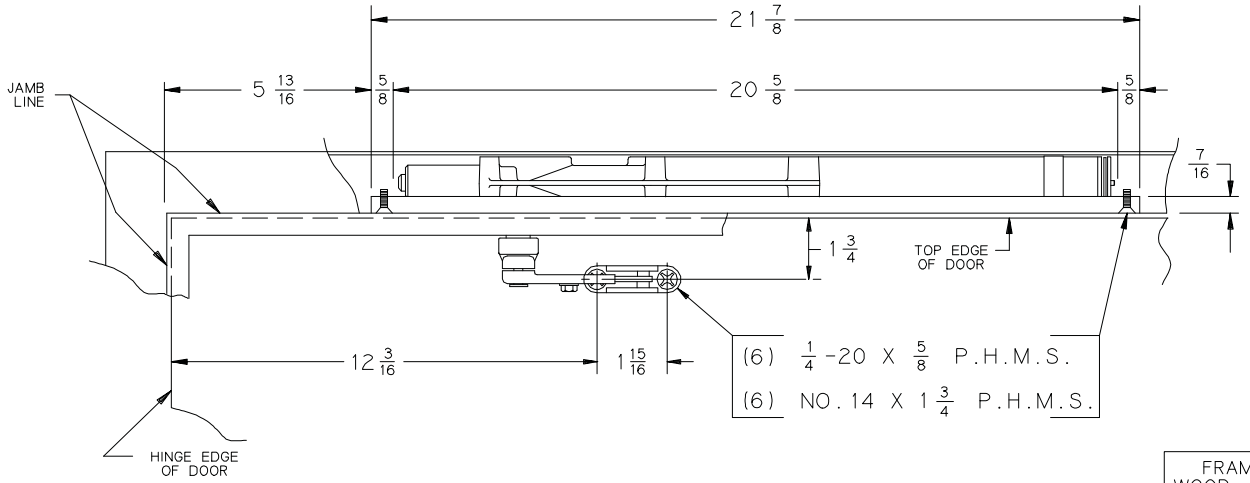

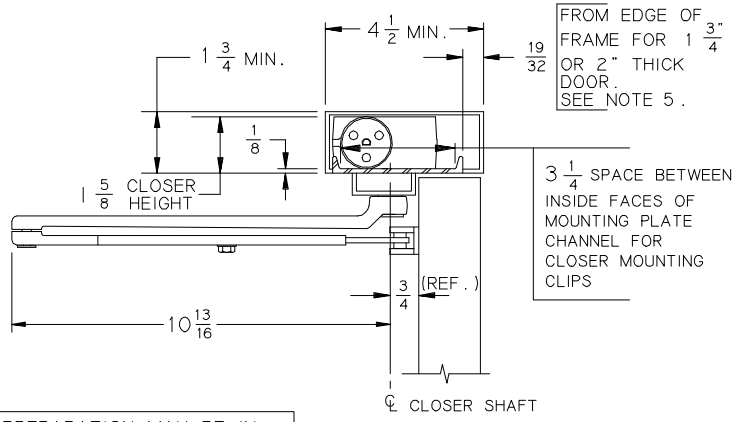

FRAME PREPARATION MAY BE IN WOOD, HOLLOW METAL OR ALUMINUM TUBE. CONSULT FACTORY IF FRAME DETAIL IS DIFFERENT.

THIS TEMPLATE FOR OPENINGS UP TO 100° ONLY.

inch	1/8	3/16	1/4	21/64	3/8	7/16	31/64	9/16	19/32	5/8	3/4	7/8	1	1 5/8	1 11/16	1 3/4
mm	3	5	6	8	10	11	12	14	15	16	19	22	25	41	43	44

inch	1 15/16	2	2 3/4	3 1/4	3 23/32	4 3/16	4 1/2	5 13/16	8 3/8	10 13/16	12 3/16	20 5/8	20 23/32	21 1/8	21 7/8
mm	49	51	70	83	94	106	114	148	213	275	310	524	526	537	556

No.	REVISION	BY	DATE
1	CAD CONVERSION	CTB	6/93
2	TEMPLATE UPDATE	JEJ	6/96
3	TEMPLATE UPDATE	AMM	2/98

LCN®

APP BY JEJ 6/96

DO NOT SCALE

OVERHEAD CONCEALED CLOSER WITH STANDARD ARM

5030 (UP TO 100°)

5031 5032 5033 5034 5035 5036	NON HOLD OPEN (101°TO 180°) H-180° (101°TO 180°)
AUXILIARY STOP RECOMMENDED	
LEFT HAND DOOR AND CLOSER SHOWN. RIGHT HAND OPPOSITE	6/96

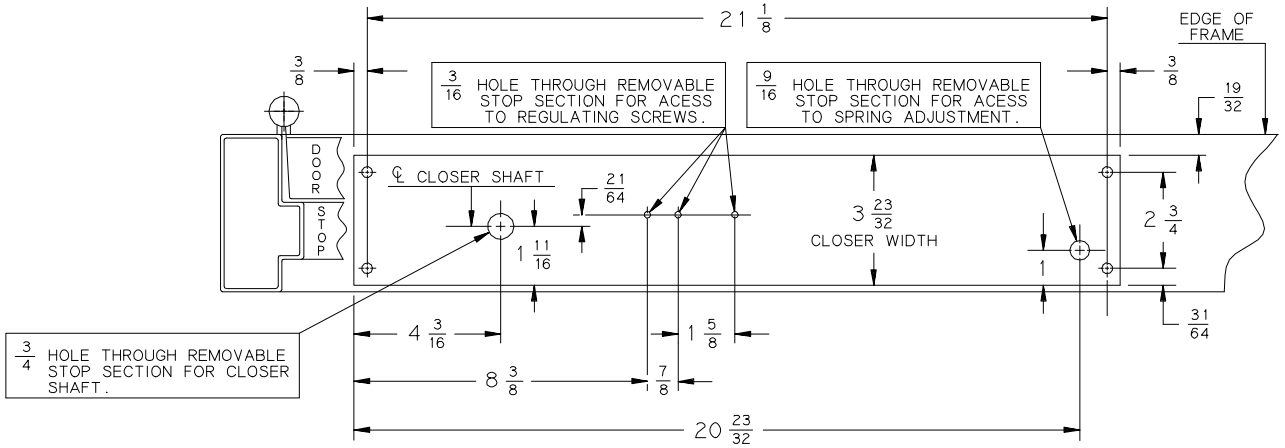

NOTES :

1. FOR DOOR OPENINGS LESS THAN 101° SEE 5030 (UP TO 100°) TEMPLATE
2. MAXIMUM STOP THICKNESS $\frac{5}{8}$".
3. $\frac{1}{8}$" DOOR TO SOFFIT CLEARANCE REQUIRED.
4. FOR 180° OPENINGS, MAXIMUM ALLOWABLE BUTT HINGE SIZE IS 6" X 6".
5. REINFORCING PER ANSI/SDI-100 RECOMMENDED FOR HOLLOW METAL DOORS & FRAMES.
6. FOR DOORS THICKER THAN 1 3/4" CONSULT LCN.

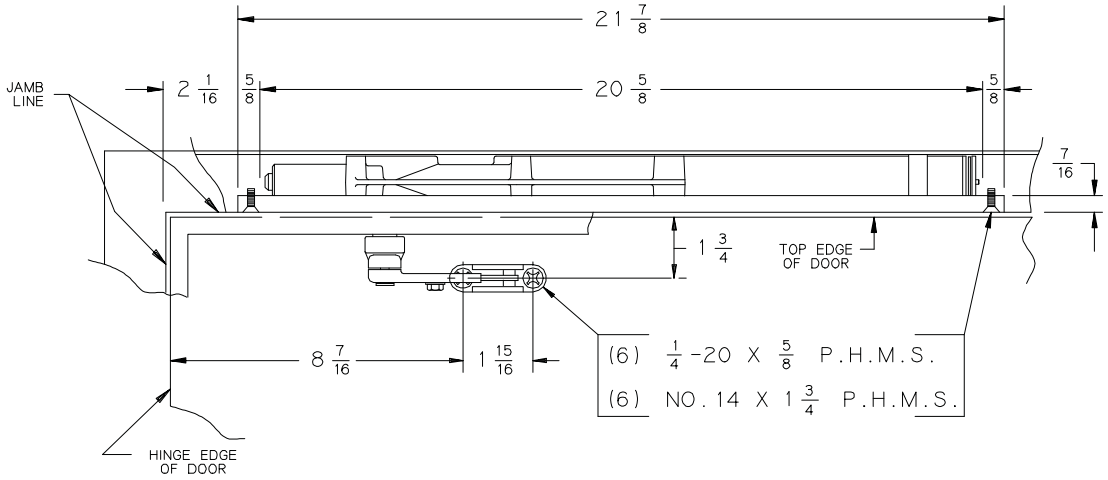

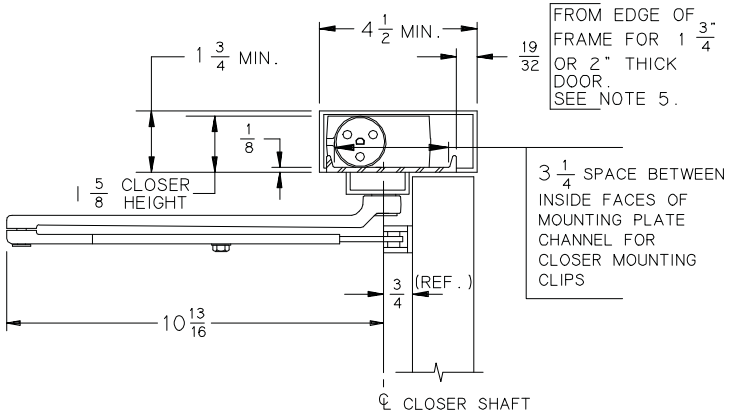

FRAME PREPARATION MAY BE IN WOOD, HOLLOW METAL OR ALUMINUM TUBE. CONSULT FACTORY IF FRAME DETAIL IS DIFFERENT.

AN ALUMINUM COMBINATION MOUNTING AND FINISH PLATE IS INCLUDED AS PART OF THE CLOSER. AN APPLIED REMOVABLE HEADSTOP MUST BE USED AND MOUNTED BETWEEN SIDE STOPS FOR REMOVABILITY. MOUNTING SCREW HOLES FOR REMOVABLE HEADSTOP MUST SPAN CLOSER MOUNTING/FINISH PLATE

THIS TEMPLATE FOR OPENINGS FROM 101°TO 180° ONLY.

inch	1/8	3/16	1/4	21/64	3/8	7/16	31/64	9/16	19/32	5/8	3/4	7/8	1	1 5/8	1 11/16	1 3/4	1 15/16
mm	3	5	6	8	10	11	12	14	15	16	19	22	25	41	43	44	49

inch	2	2 1/16	2 1/2	2 3/4	3 1/4	3 23/32	4 3/16	4 1/2	6	8 3/8	8 7/16	10 13/16	20 5/8	20 23/32	21 1/8	21 7/8
mm	51	52	64	70	83	94	106	114	152	213	214	275	524	526	537	556

No.	REVISION	BY	DATE
1	CAD CONVERSION	CTB	6/93
2	TEMPLATE UPDATE	JEJ	6/96
3	TEMPLATE UPDATE	AMM	2/98
4	REMOVED H180 ARM	JDT	9/09

LCN®

APP BY JEJ 6/96

DO NOT SCALE

OVERHEAD CONCEALED CLOSER WITH STANDARD ARM

5030 (101°TO 180°)

5031 5032 5033 5034 5035 5036	NON HOLD OPEN (UP TO 120°] H-90° (UP TO 120°)
AUXILIARY STOP RECOMMENDED	
LEFT HAND DOOR AND CLOSER SHOWN. RIGHT HAND OPPOSITE	6/96

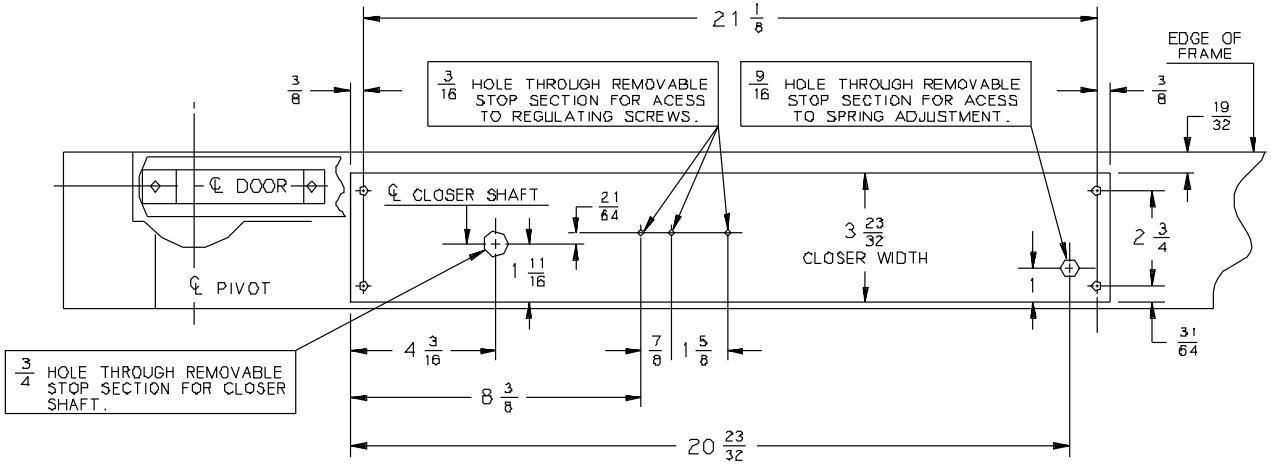

NOTES :

1 - MAXIMUM STOP THICKNESS $\frac{5}{8}$".

2 - $\frac{1}{8}$" DOOR TO SOFFIT CLEARANCE REQUIRED.

3 - REINFORCING PER ANSI/SDI-100 RECOMMENDED FOR HOLLOW METAL DOOR AND FRAMES.

4 - FOR DOORS THICKER THAN $1\frac{3}{4}$" CONSULT LCN.

AN ALUMINUM COMBINATION MOUNTING AND FINISH PLATE IS INCLUDED AS PART OF THE CLOSER. AN APPLIED REMOVABLE HEADSTOP MUST BE USED AND MOUNTED BETWEEN SIDE STOPS FOR REMOVABILITY. MOUNTING SCREW HOLES FOR REMOVABLE HEADSTOP MUST SPAN CLOSER MOUNTING/FINISH PLATE.

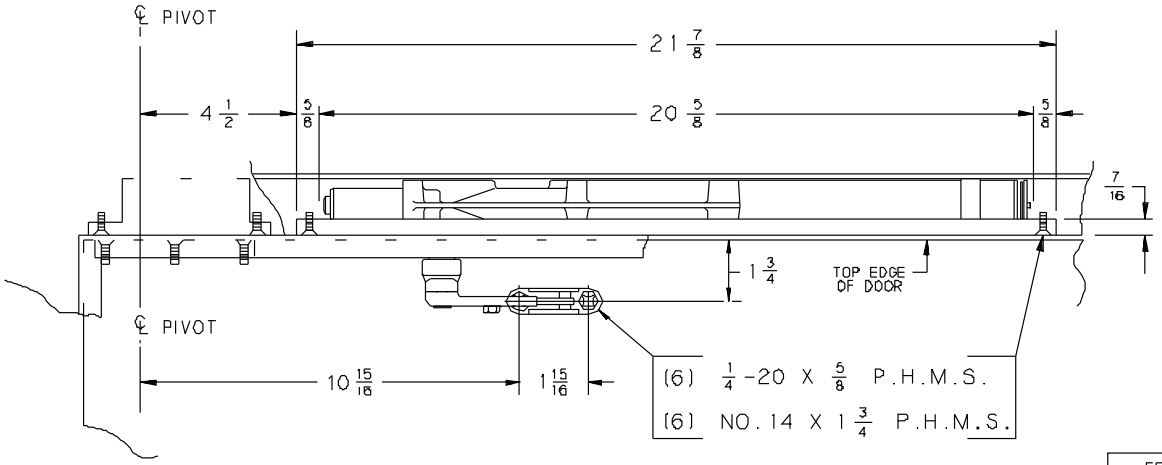

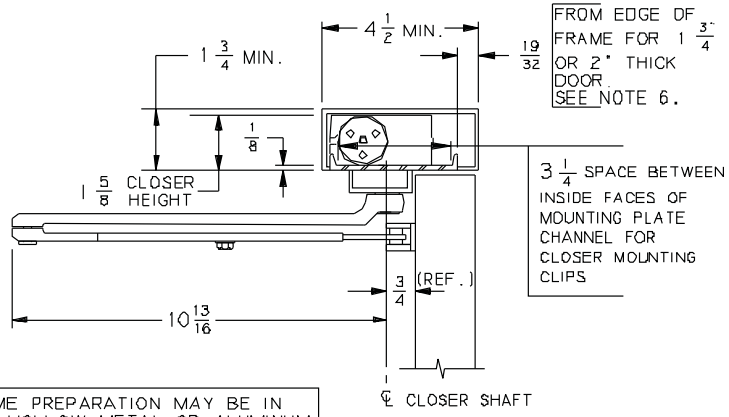

FRAME PREPARATION MAY BE IN WOOD, HOLLOW METAL OR ALUMINUM TUBE. CONSULT FACTORY IF FRAME DETAIL IS DIFFERENT

inch	1/8	3/16	1/4	21/64	3/8	7/16	31/64	1/2	9/16	19/32
mm	3	5	6	8	10	11	12	13	14	15

inch	5/8	3/4	7/8	1	1 5/8	1 11/16	1 3/4	1 15/16	2	2 3/4	3 1/4
mm	16	19	22	25	41	43	44	49	51	70	83

inch	3 23/32	4 3/16	4 1/2	5 1/4	8 3/8	10 13/16	10 15/16	20 5/8	20 23/32	21 1/8	21 7/8
mm	94	106	114	133	213	275	278	524	526	537	556

No.	REVISION	BY	DATE
1	CAD CONVERSION	CTB	6/93
2	TEMPLATE UPDATE	JEJ	6/96
3	TEMPLATE UPDATE	AMM	2/98
4	REMOVED PIVOT INFO.	AMM	5/01

LCN®

APP BY JEJ 6/96

DO NOT SCALE

OVERHEAD CONCEALED CLOSER WITH STANDARD ARM

5030-CP

5031-OP 5032-OP 5033-OP 5034-OP 5035-OP 5036-OP	H-90° (UP TO 115°)
AUXILIARY STOP RECOMMENDED	
LEFT HAND DOOR AND CLOSER SHOWN, RIGHT HAND OPPOSITE	6/96

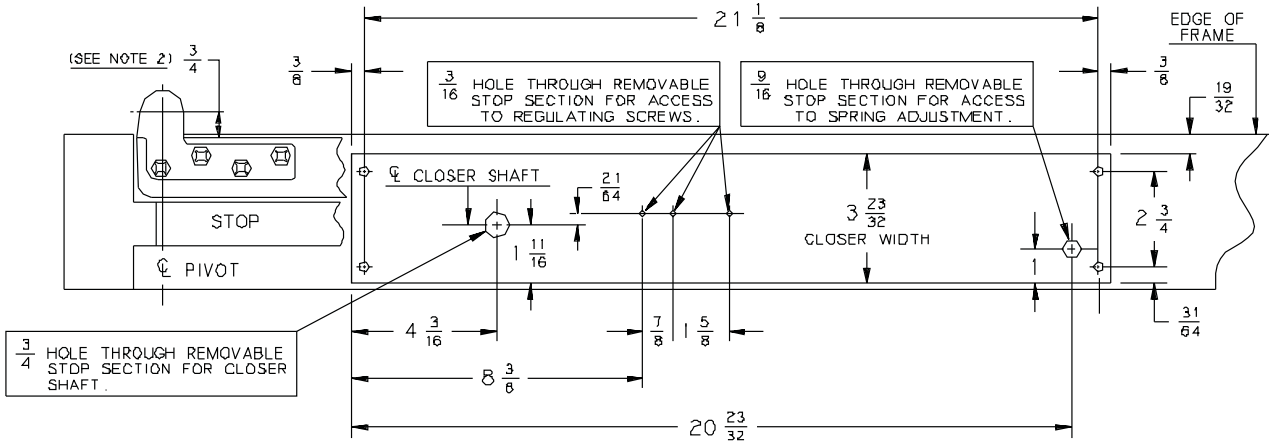

NOTES :

1 - BEVEL HEEL EDGE OF DOOR $\frac{1}{8}$" IN 2".

2 - FOR PIVOT INSTALLATION DETAILS, SEE 7220 SERIES PIVOT TEMPLATE.

3 - MAXIMUM STOP THICKNESS $\frac{5}{8}$".

4 - $\frac{1}{16}$" DOOR TO SOFFIT CLEARANCE REQUIRED.

5 - REINFORCING PER ANSI/SDI-100 RECOMMENDED FOR HOLLOW METAL DOOR AND FRAMES.

6 - FOR DOORS THICKER THAN $1\frac{3}{4}$" CONSULT LCN.

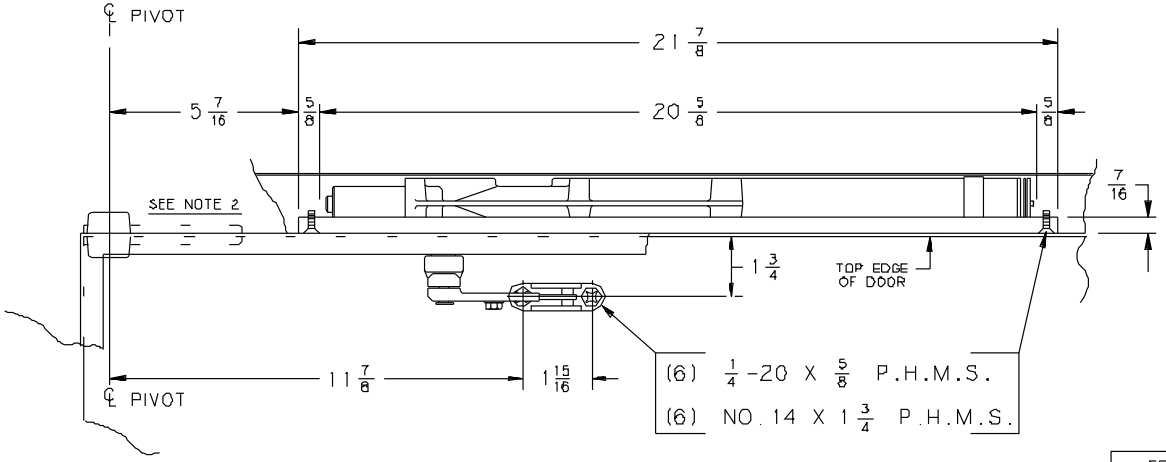

AN ALUMINUM COMBINATION MOUNTING AND FINISH PLATE IS INCLUDED AS PART OF THE CLOSER. AN APPLIED REMOVABLE HEADSTOP MUST BE USED AND MOUNTED BETWEEN SIDE STOPS FOR REMOVABILITY. MOUNTING SCREW HOLES FOR REMOVABLE HEADSTOP MUST SPAN CLOSER MOUNTING/FINISH PLATE.

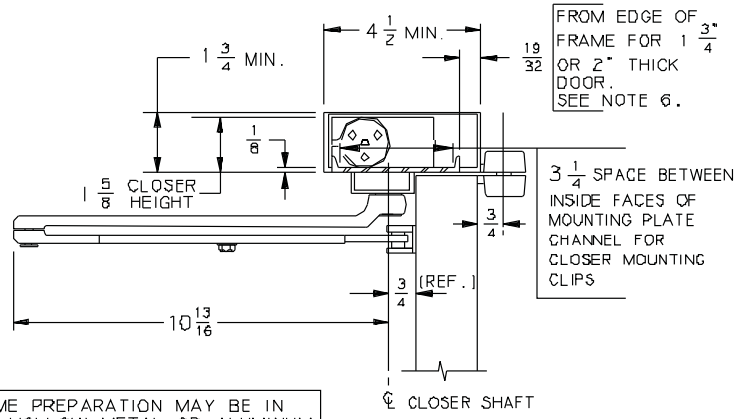

FRAME PREPARATION MAY BE IN WOOD, HOLLOW METAL OR ALUMINUM TUBE. CONSULT FACTORY IF FRAME DETAIL IS DIFFERENT.

inch	1/16	1/8	3/16	1/4	21/64	3/8	7/16	31/64	9/16	19/32
mm	2	3	5	6	8	10	11	12	14	15

inch	5/8	3/4	1	1 5/8	1 11/16	3/4	1 15/16	2	2 3/4	3 1/2
mm	16	19	25	41	43	44	49	51	70	83

inch	3 23/32	4 3/16	4 1/2	5 7/16	8 3/8	10 13/16	11 7/8	20 5/8	20 23/32	21 1/8	21 7/8
mm	94	106	114	138	213	275	302	524	526	537	556

No.	REVISION	BY	DATE
2	TEMPLATE UPDATE	JEJ	6/96
3	TEMPLATE UPDATE	AMM	2/98

LCN®

APP BY JEJ 6/96

DO NOT SCALE

OVERHEAD CONCEALED CLOSER WITH STANDARD ARM

5030-OP