13187

5010 Series

LCN®

Installation Instructions

1 Installation

1a Make sure the hand of the closer and the door correspond. The hand of the closer is stamped on the finish plate. The hand of the closer cannot be reversed.

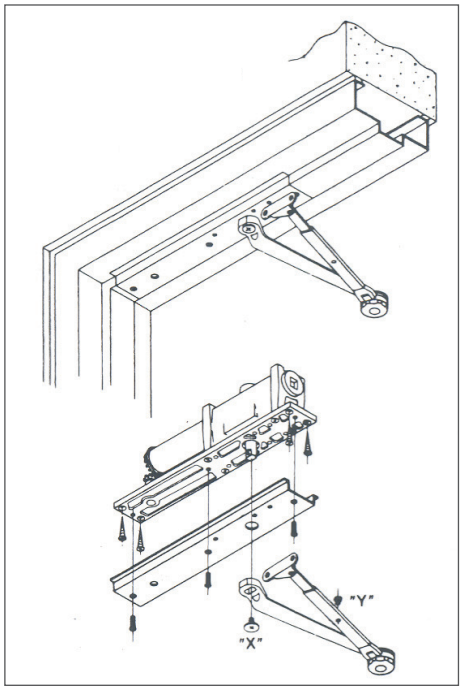

1b For ADA applications use templates that allow maximum door opening.

1c If the frame is not prepared for the closer, mortise to dimensions are shown on attached templated for the desired degree of opening.

1d Install the closer in a prepared frame with the fasteners provided. Replace the finish plate and be sure that the plate is flush with the soffit. Place the arm on the shaft and push up into position. Insert the arm screw "X."

1e Close the door and install the shoe to the door as shown on the template. Open the door slightly and insert the rod in the forearm. Close the door. Starting with the main arm at a right angle to the door, move the arm toward the latch until holes in rod and tube line, insert and tighten screw "Y."

CAUTION

Improper installation or regulation may result in personal injury or property damage. Follow all instructions carefully. For questions contact LCN at 877-671-7011.

Customer Service

1-877-671-7011 www.allegion.com

2 Regulation

Door closer regulation is preset at the factory. Adjust as follows only if necessary: A "normal" closing time from a 90° open position is 5 to 7 seconds, evenly divided between main speed and latch speed (see figure below). Use a 3⁄32" hex wrench to adjust the regulating screws. To slow the main speed of the door, turn regulating screw closest to shaft clockwise. To slow latch speed, turn regulating screw closet to hinge clockwise. **BACKCHECK:** To increase backcheck intensity, turn regulating screw closet to the latch clockwise.

DO NOT USE AN ABRUPT BACKCHECK. DO NOT USE THE DOOR CLOSER AS A DOOR STOP.

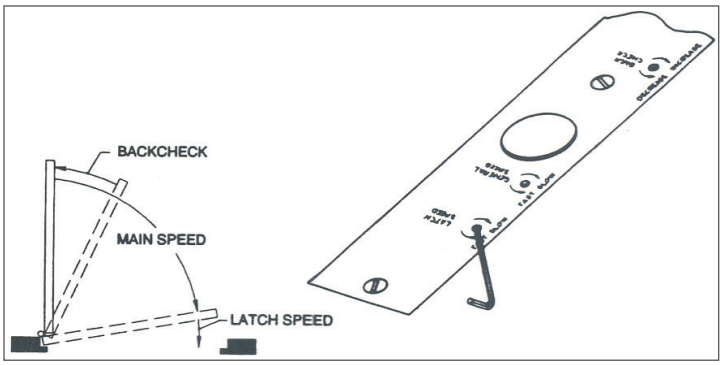

3 Adjustments

3a Adjust the **CLOSING POWER** only if more power is needed. The closer is shipped with minimum closing power preset. To increase the CLOSING POWER turn the spring adjusting screw clockwise. Maximum adjustment 36 turns.

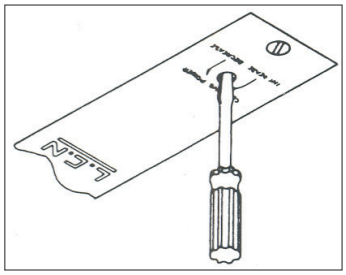

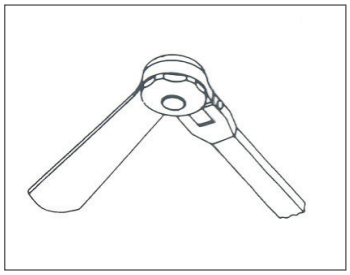

3b To adjust the 90° hold-open arm (up to 100° opening) with the hold-open features is at the elbow. The arm is preset to hold the door open at 90°. To adjust: Loosen the hold open nut. Open the door a few degrees before the desired hold open position, and tighten the hold open nut securely.

3c To adjust for additional closing power at the latch (Regular & 90° H.O. Only):

a. Remove screw "Y" (Step 4), and separate the rod from the tube.
b. Remove the shoe screws and turn the shoe over.
c. Reassemble the arm.

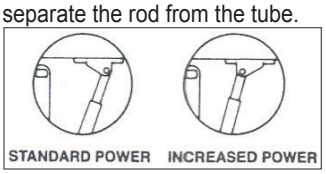

ALLEGION

© Allegion 2015
Printed in U.S.A.

13187 Rev. 06/15-h

5011 5012 5013 5014 5015 5016	NON HOLD OPEN (UP TO 100°) H-90° (UP TO 100°)
AUXILIARY STOP RECOMMENDED	
LEFT HAND DOOR AND CLOSER SHOWN. RIGHT HAND OPPOSITE	6/96

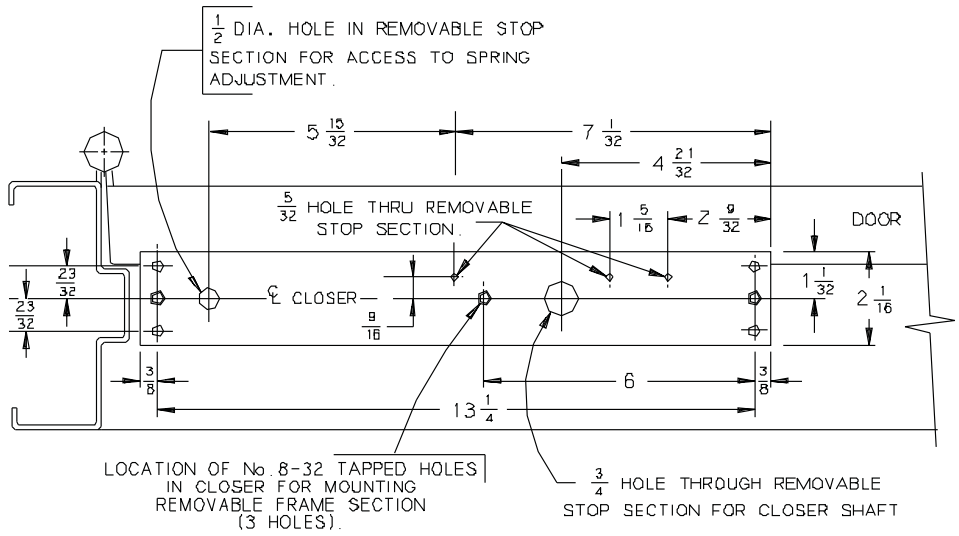

NOTES :

1 - FOR DOOR OPENINGS GREATER THAN 100° SEE OTHER SIDE OF THIS TEMPLATE.

2 - MAXIMUM STOP THICKNESS 5/8".

3 - MAY BE USED WITH CONCEALED IN DOOR AUXILIARY HOLDER. MAX. OPENING 95° USE THIS SIDE ONLY

4 - REINFORCING PER ANSI/SDI-100 RECOMMENDED FOR HOLLOW METAL DOOR AND FRAMES.

5 - THIS PRODUCT REQUIRES A 4" MINIMUM FRAME HEADER. CONSULT FACTORY IF HEAD JAMB IS LESS THAN 4".

FRAME PREPARATION MAY BE IN WOOD. HOLLOW METAL OR ALUMINUM TUBE. CONSULT FACTORY IF FRAME DETAIL IS DIFFERENT.

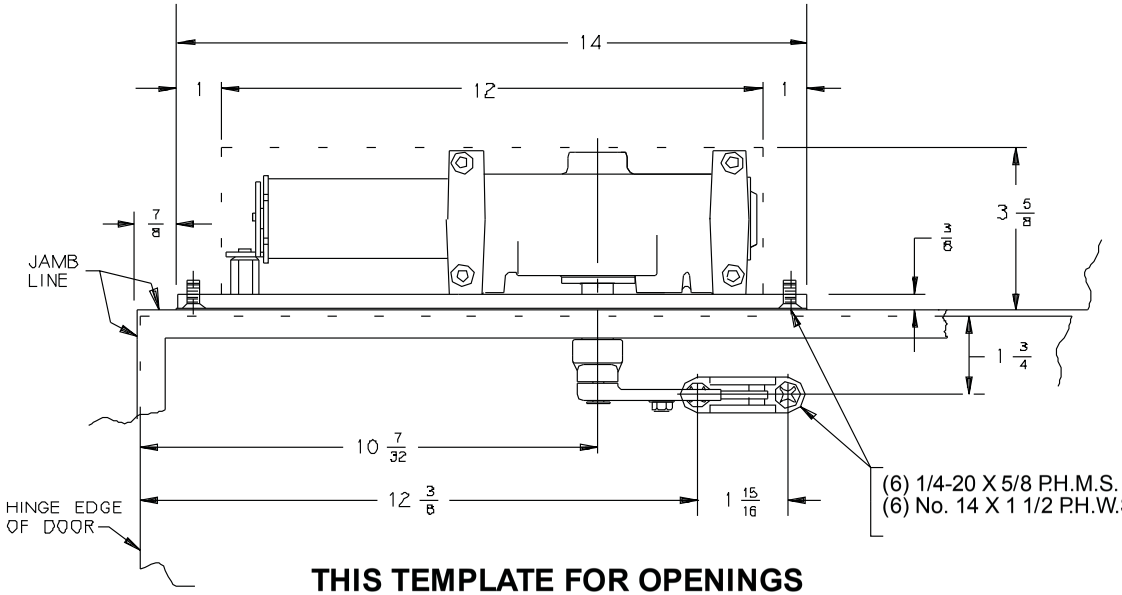

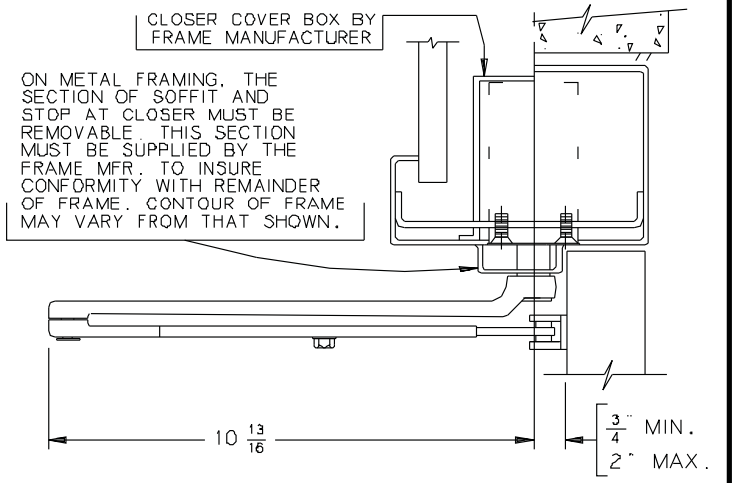

THIS TEMPLATE FOR OPENINGS UP TO 100° ONLY.

NOT TO BE USED TO MEET ADA.

inch	5/32	1/4	3/8	1/2	9/16	5/8	23/32	3/4	7/8	1	1 1/32	1 5/16	1 3/4	1 15/16
mm	4	6	10	13	14	16	18	19	22	25	26	33	44	49

inch	2	2 1/16	2 9/32	3 5/8	4 21/32	5 15/32	6	7 1/32	10 7/32	10 13/16	12 3/8	12	13 1/4	14
mm	51	52	58	92	118	139	152	179	260	275	314	305	337	356

No.	REVISION	BY	DATE
1	CAD CONVERSION	CTB	6/93
2	TEMPLATE UPDATE	JEJ	6/96
3	TEMPLATE UPDATE	AMM	2/98

APP BY JEJ 6/96

DO NOT SCALE

OVERHEAD CONCEALED CLOSER WITH STANDARD ARM

5010 (UP TO 100°)

5011
5012
5013
5014
5015
5016
} NON HOLD OPEN (101° TO 180°)

AUXILIARY STOP RECOMMENDED

LEFT HAND DOOR AND CLOSER SHOWN. RIGHT HAND OPPOSITE | 6/96

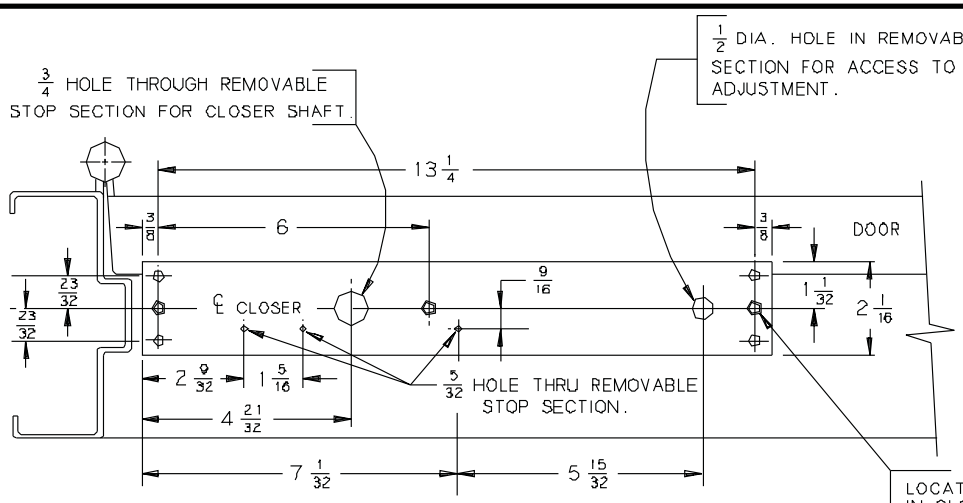

NOTES :

1 - FOR DOOR OPENINGS LESS THAN 101°, SEE OTHER SIDE OF THIS TEMPLATE.
2 - MAXIMUM STOP THICKNESS 5/8".
3 - FOR 180° OPENINGS. MAXIMUM ALLOWABLE BUTT HINGE SIZE IS 6" X 6".
4 - 3/4" DIMENSION MAY BE INCREASED TO 2" FOR NON HOLD OPEN ARMS ONLY.
5 - 1/8" DOOR TO SOFFIT CLEARANCE REQUIRED.
6 - REINFORCING PER ANSI/SDI-100 RECOMMENDED FOR HOLLOW METAL DOOR AND FRAMES.
7 - THIS PRODUCT REQUIRES A 4" MINIMUM FRAME HEADER. CONSULT FACTORY IF HEAD JAMB IS LESS THAN 4".

LOCATION OF No.8-32 TAPPED HOLES IN CLOSER FOR MOUNTING REMOVABLE STOP SECTION. (3 HOLES)

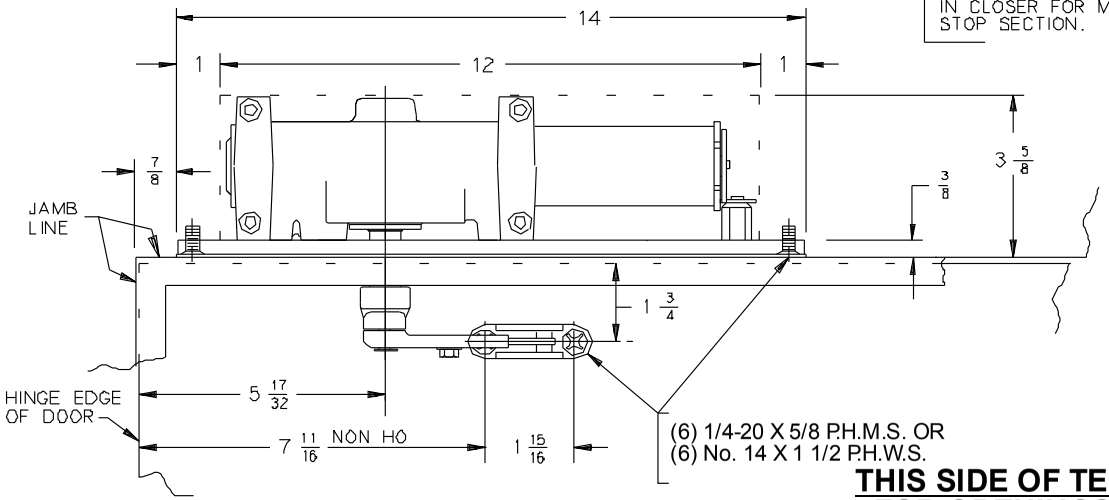

CLOSER COVER BOX BY FRAME MANUFACTURER

ON METAL FRAMING, THE SECTION OF SOFFIT AND STOP AT CLOSER MUST BE REMOVABLE. THIS SECTION MUST BE SUPPLIED BY THE FRAME MFR. TO INSURE CONFORMITY WITH REMAINDER OF FRAME. CONTOUR OF FRAME MAY VARY FROM THAT SHOWN.

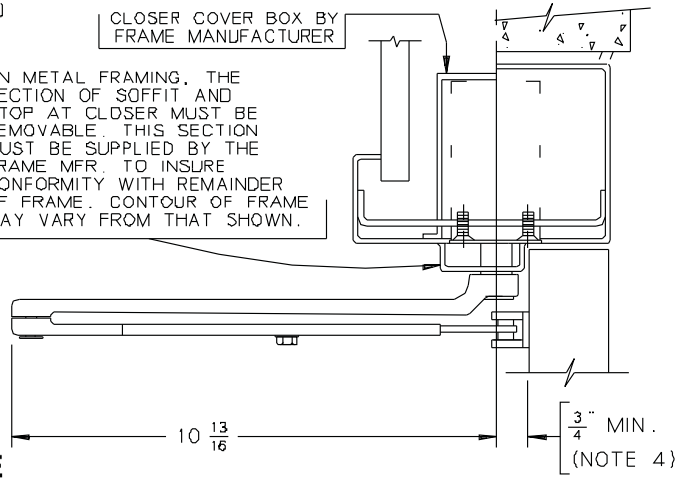

THIS SIDE OF TEMPLATE FOR OPENINGS FROM 101° TO 180° ONLY. NOT TO BE USED WITH DOOR HOLDER.

FRAME PREPARATION MAY BE IN WOOD, HOLLOW METAL OR ALUMINUM TUBE. CONSULT FACTORY IF FRAME DETAIL IS DIFFERENT.

USE THIS TEMPLATE TO MEET ADA.

inch	1/8	5/32	1/4	3/8	1/2	9/16	5/8	23/32	3/4	7/8	1	1 1/32	1 5/16	1 11/16	1 3/4	1 15/16
mm	3	4	6	10	13	14	16	18	19	22	25	26	33	43	44	49

inch	2	2 1/16	2 9/32	2 1/2	3 5/8	4 21/32	5 15/32	5 17/32	6	7 1/32	7 11/16	7 23/32	10 13/16	12	13 1/4	14
mm	51	52	58	64	92	118	139	140	152	179	195	196	275	305	337	356

No.	REVISION	BY	DATE
1	CAD CONVERSION	CTB	6/93
2	TEMPLATE UPDATE	JEJ	6/96
3	TEMPLATE UPDATE	AMM	2/98
4	REMOVED H180 ARM	JDT	9/09

APP BY JEJ 6/96

DO NOT SCALE

OVERHEAD CONCEALED CLOSER WITH STANDARD ARM

5010 (101° TO 180°)

5011
5012
5013
5014
5015
5016
} NON HOLD OPEN (UP TO 100°)
H-90° (UP TO 100°)

AUXILIARY STOP RECOMMENDED

LEFT HAND DOOR AND CLOSER SHOWN. RIGHT HAND OPPOSITE

6/96

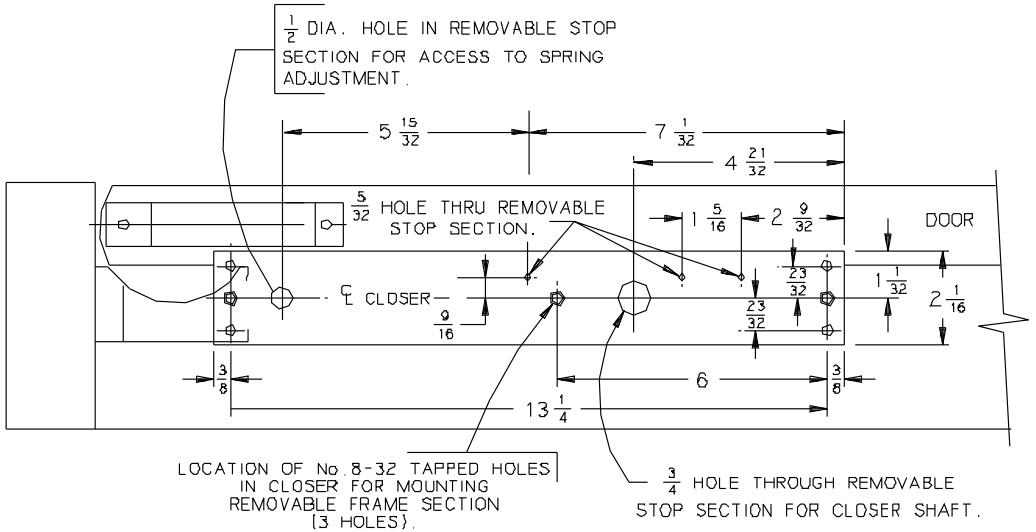

NOTES -
1 - MAXIMUM STOP THICKNESS 5/8".
2 - 1/8" MAXIMUM DOOR TO SOFFIT CLEARANCE.
3 - REINFORCING PER ANSI/SDI-100 RECOMMENDED FOR HOLLOW METAL DOOR AND FRAMES.
4 - THIS PRODUCT REQUIRES A 4" MINIMUM FRAME HEADER. CONSULT FACTORY IF HEAD JAMB IS LESS THAN 4".

FRAME PREPARATION MAY BE IN WOOD, HOLLOW METAL OR ALUMINUM TUBE. CONSULT FACTORY IF FRAME DETAIL IS DIFFERENT.

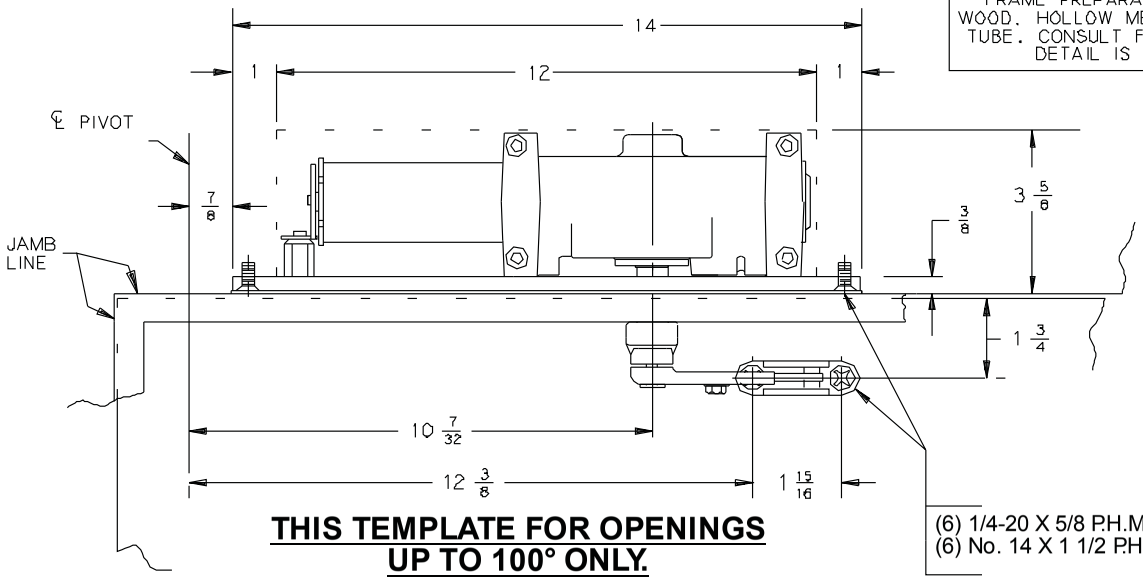

CLOSER COVER BOX BY FRAME MANUFACTURER

ON METAL FRAMING, THE SECTION OF SOFFIT AND STOP AT CLOSER MUST BE REMOVABLE. THIS SECTION MUST BE SUPPLIED BY THE FRAME MFR. TO INSURE CONFORMITY WITH REMAINDER OF FRAME. CONTOUR OF FRAME MAY VARY FROM THAT SHOWN.

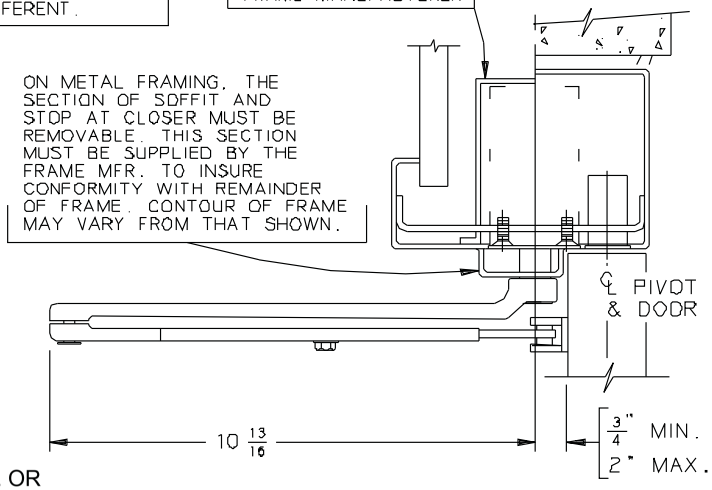

THIS TEMPLATE FOR OPENINGS UP TO 100° ONLY.

NOT TO BE USED TO MEET ADA.

inch	1/8	9/32	1/4	3/8	1/2	9/16	5/8	23/32	3/4	7/8	1	1 1/32	1 3/16	1 3/4	1 13/16
mm	3	4	6	10	13	14	16	18	19	22	25	26	33	44	49

inch	2	2 1/16	2 9/32	3 5/8	4 21/32	5 15/32	6	7 1/32	10 7/32	10 13/16	12 3/8	12	13 1/4	14
mm	51	52	58	92	118	139	152	179	260	275	314	305	337	356

No.	REVISION	BY	DATE
1	CAD CONVERSION	CTB	6/93
2	TEMPLATE UPDATE	JEJ	6/96
3	TEMPLATE UPDATE	AMM	2/98
4	REMOVED PIVOT INFO.	AMM	5/01

APP BY JEJ 6/96

DO NOT SCALE

OVERHEAD CONCEALED CLOSER WITH STANDARD ARM & CENTER PIVOTS

5010-CP (UP TO 100°)

5011 THRU 5016	NON HOLD OPEN (101° TO 140°)
AUXILIARY STOP RECOMMENDED	
LEFT HAND DOOR AND CLOSER SHOWN. RIGHT HAND OPPOSITE	6/96

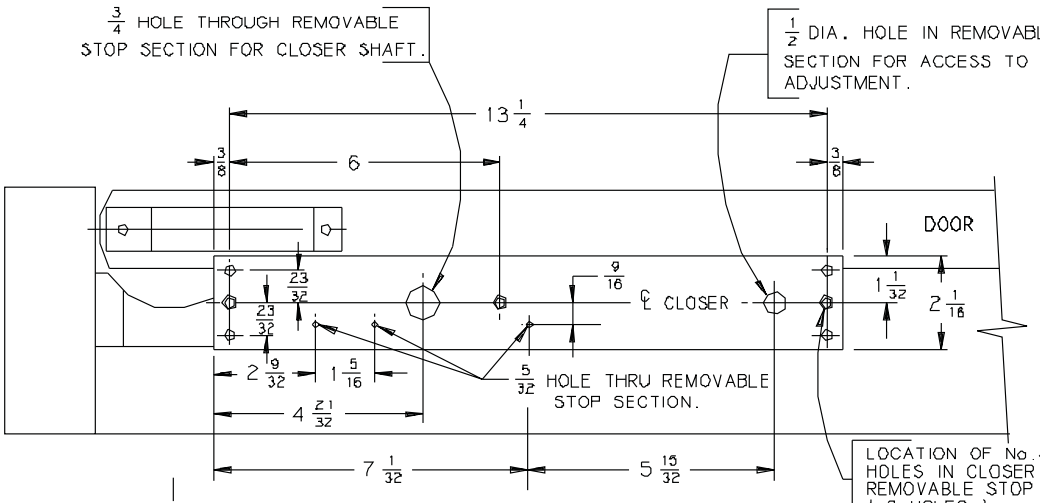

NOTES -

1 - MAXIMUM STOP THICKNESS 5/8".
2 - 1/8" MAXIMUM DOOR TO SOFFIT CLEARANCE.
3 - 3/4" DIMENSION MAY BE INCREASED UP TO 2" FOR NON HOLD OPEN ARMS ONLY.
4 - REIFORCING PER ANSI/SDI-100 RECOMMENDED FOR HOLLOW METAL DOOR AND FRAMES.
5 - THIS PRODUCT REQUIRES A 4" MINIMUM FRAME HEADER. CONSULT FACTORY IF HEAD JAMB IS LESS THAN 4".

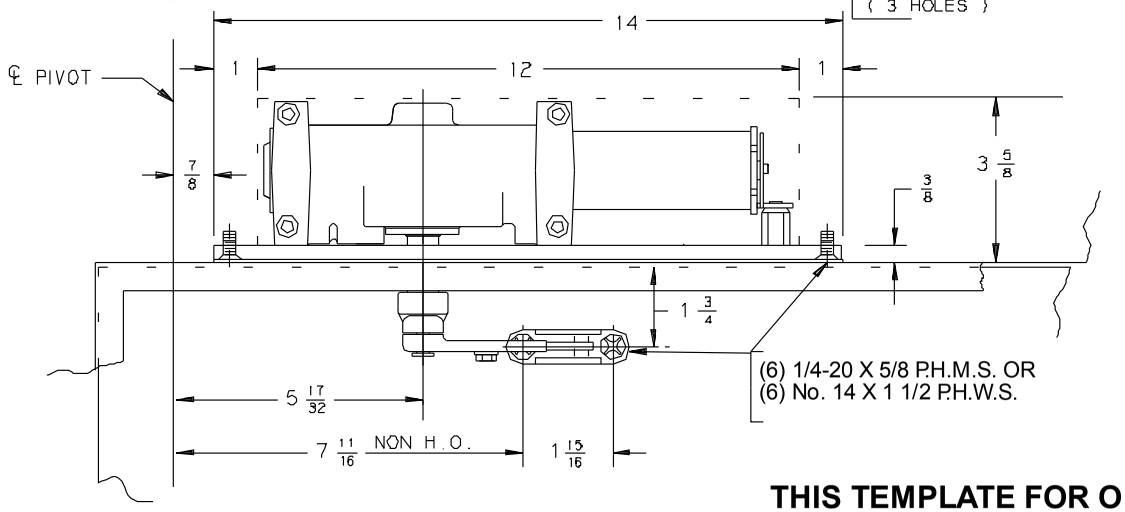

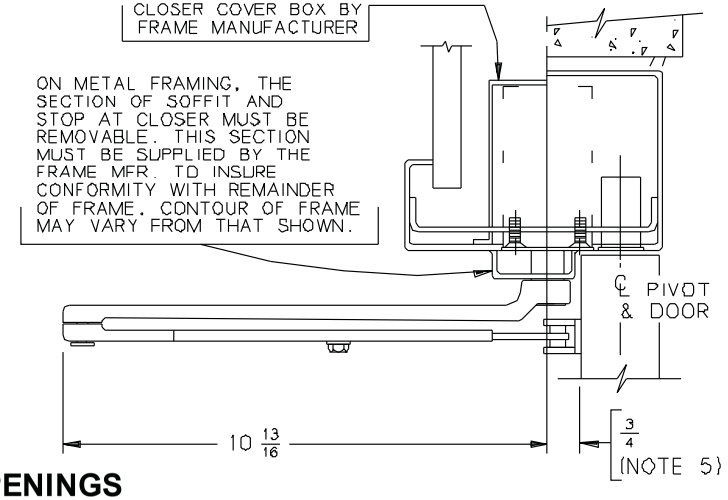

THIS TEMPLATE FOR OPENINGS FROM 101° TO 140° ONLY. NOT TO BE USED WITH DOOR HOLDER.

USE THIS TEMPLATE TO MEET ADA.

FRAME PREPARATION MAY BE IN WOOD, HOLLOW METAL OR ALUMINUM TUBE. CONSULT FACTORY IF FRAME DETAIL IS DIFFERENT.

inch	1/8	5/32	1/4	3/8	1/2	9/16	5/8	23/32	3/4	7/8	1	1 1/32	1 5/16	1 11/16	1 3/4	1 15/16
mm	3	4	6	10	13	14	16	18	19	22	25	26	33	43	44	49

inch	2	2 1/16	2 9/32	2 1/2	3 5/8	4 21/32	5 15/32	5 17/32	6	7 1/32	7 11/16	7 23/32	10 13/16	12	13 1/4	14
mm	51	52	58	64	92	118	139	140	152	179	195	196	275	305	337	356

No.	REVISION	BY	DATE
1	CAD CONVERSION	CTB	6/93
2	TEMPLATE UPDATE	JEJ	6/96
3	TEMPLATE UPDATE	AMM	2/98
4	REMOVED PIVOT INFO.	AMM	5/01
5	REMOVED H180 ARM	JDT	9/09

APP BY JEJ 6/96

DO NOT SCALE

OVERHEAD CONCEALED CLOSER WITH STANDARD ARM & CENTER PIVOTS

5010-CP (101°TO 140°)

5011 5012 5013 5014 5015 5016	NON HOLD OPEN (UP TO 100°) H-90° [UP TO 100°]
AUXILIARY STOP RECOMMENDED	
LEFT HAND DOOR AND CLOSER SHOWN, RIGHT HAND OPPOSITE	6/96

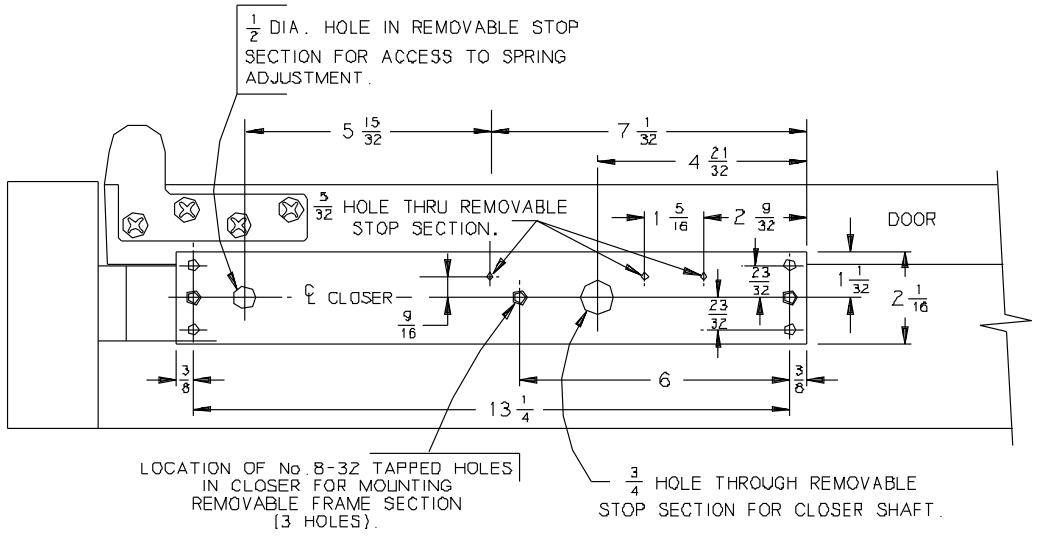

NOTES -

1 - MAXIMUM STOP THICKNESS 5/8".

2 - MAY BE USED WITH CONCEALED IN DOOR AUXILIARY HOLDER. MAXIMUM OPENING 95°.

3 - REINFORCING PER ANSI/SDI-100 RECOMMENDED FOR HOLLOW METAL DOOR AND FRAMES.

4 - THIS PRODUCT REQUIRES A 4" MINIMUM FRAME HEADER. CONSULT FACTORY IF HAND JAMB IS LESS THAN 4".

FRAME PREPARATION MAY BE IN WOOD, HOLLOW METAL OR ALUMINUM TUBE. CONSULT FACTORY IF FRAME DETAIL IS DIFFERENT.

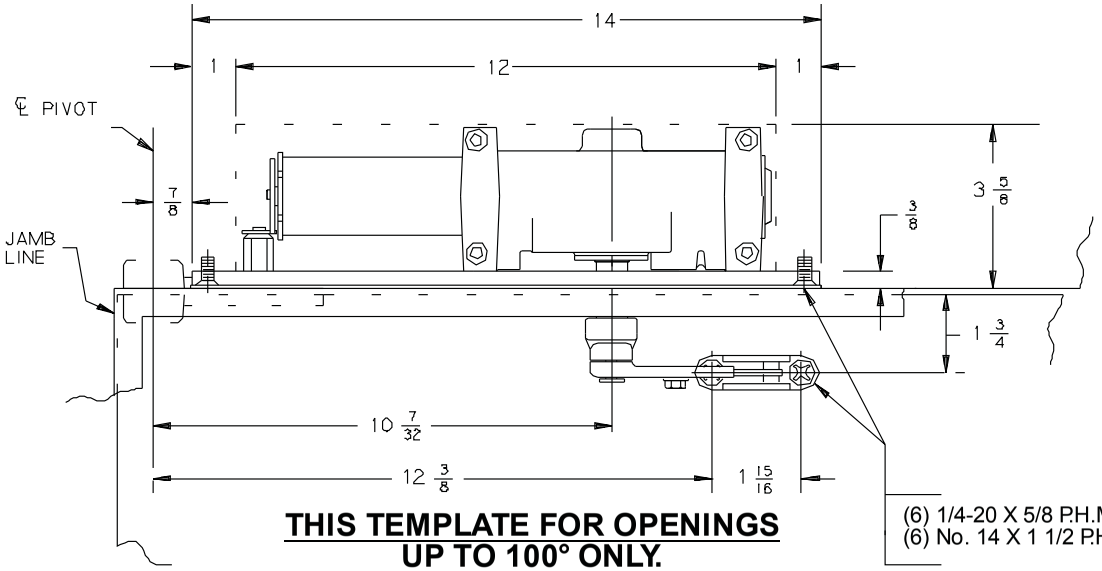

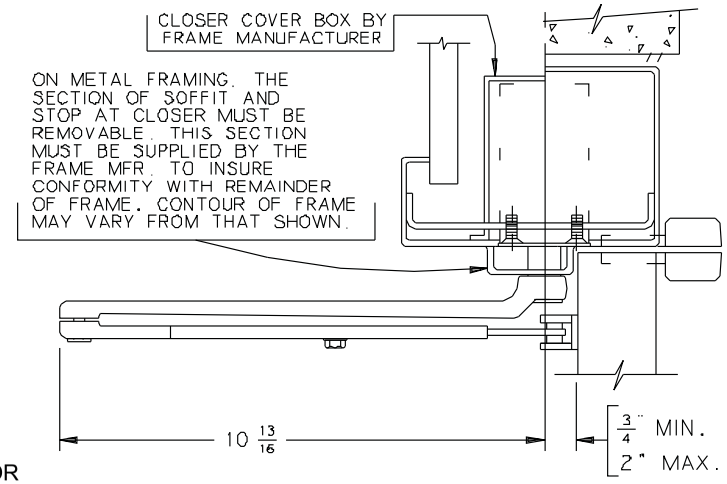

THIS TEMPLATE FOR OPENINGS UP TO 100° ONLY.

NOT TO BE USED TO MEET ADA.

inch	1/8	5/32	1/4	3/8	1/2	9/16	5/8	23/32	3/4	7/8	1	1 1/32	1 5/16	1 3/4	1 15/16
mm	3	4	6	10	13	14	16	18	19	22	25	26	33	44	49

inch	2	2 1/16	2 9/32	3 5/8	4 21/32	5 15/32	6	7 1/32	10 7/32	10 13/16	12	12 3/8	13 1/4	14
mm	51	52	58	92	118	139	152	179	260	275	305	314	337	356

No.	REVISION	BY	DATE
1	CAD CONVERSION	CTB	6/93
2	TEMPLATE UPDATE	JEJ	6/96
3	TEMPLATE UPDATE	AMM	2/98
4	REMOVED PIVOT INFO.	AMM	5/01

APP BY JEJ 6/96

DO NOT SCALE

OVERHEAD CONCEALED CLOSER WITH STANDARD ARM & OFFSET PIVOTS

5010-OP (UP TO 100°)

5011
5012
5013
5014
5015
5016
} NON HOLD OPEN (101° TO 180°)

AUXILIARY STOP RECOMMENDED

LEFT HAND DOOR AND CLOSER SHOWN, RIGHT HAND OPPOSITE | 6/96

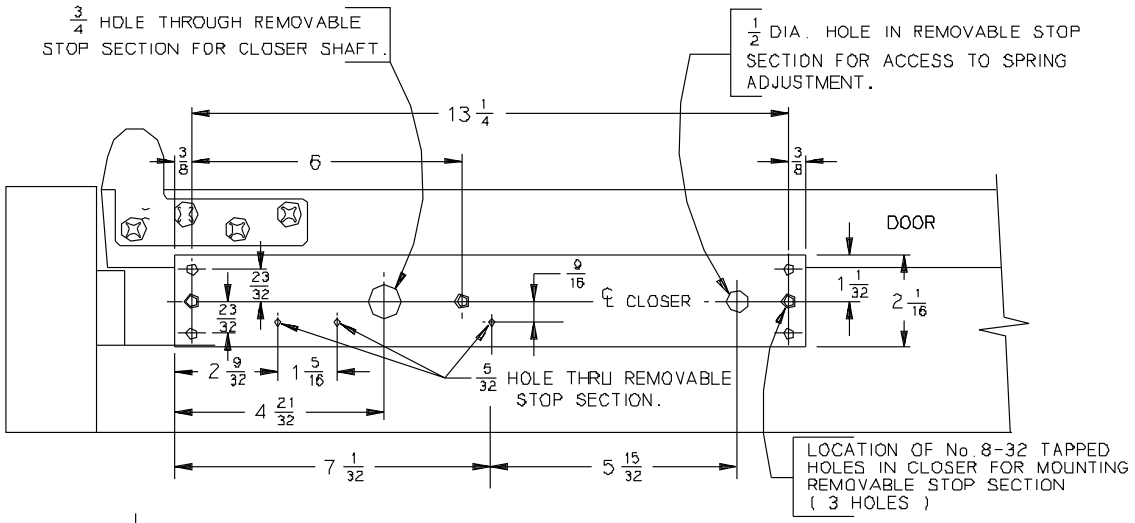

NOTES -

1 - FOR DOOR OPENINGS LESS THAN 101° SEE OTHER SIDE OF TEMPLATE.

2 - MAXIMUM STOP THICKNESS 5/8".

3 - 3/4" DIMENSION MAY BE INCREASED UP TO 2" FOR NON HOLD OPEN ARMS ONLY.

4 - REINFORCING PER ANSI/SDI-100 RECOMMENDED FOR HOLLOW METAL DOOR AND FRAMES.

5 - THIS PRODUCT REQUIRES A 4" MINIMUM FRAME HEADER. CONSULT FACTORY IF HEAD JAMB IS LESS THAN 4".

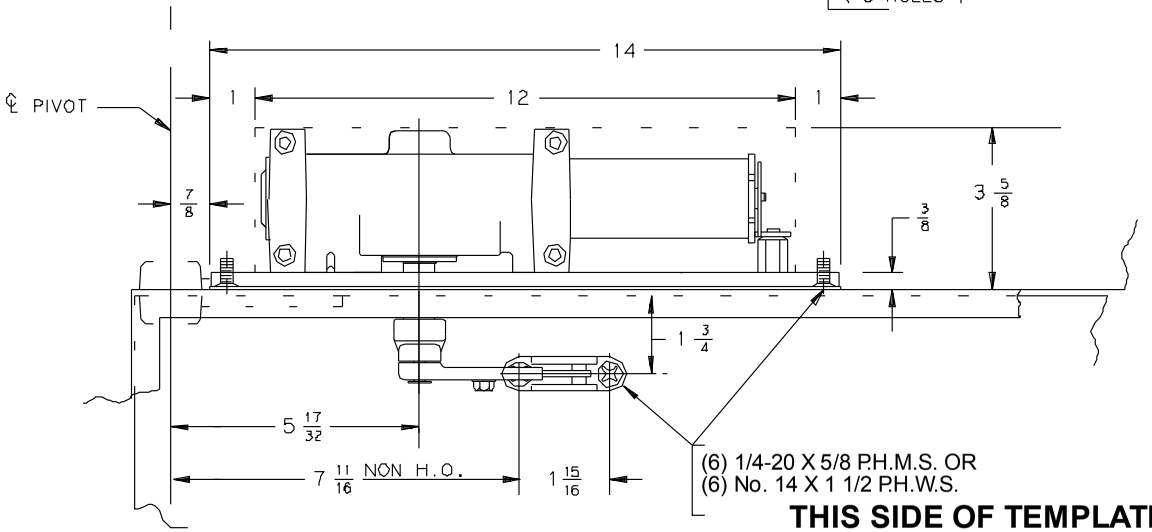

CLOSER COVER BOX BY FRAME MANUFACTURER

ON METAL FRAMING. THE SECTION OF SOFFIT AND STOP AT CLOSER MUST BE REMOVABLE. THIS SECTION MUST BE SUPPLIED BY THE FRAME MFR. TO INSURE CONFORMITY WITH REMAINDER OF FRAME. CONTOUR OF FRAME MAY VARY FROM THAT SHOWN.

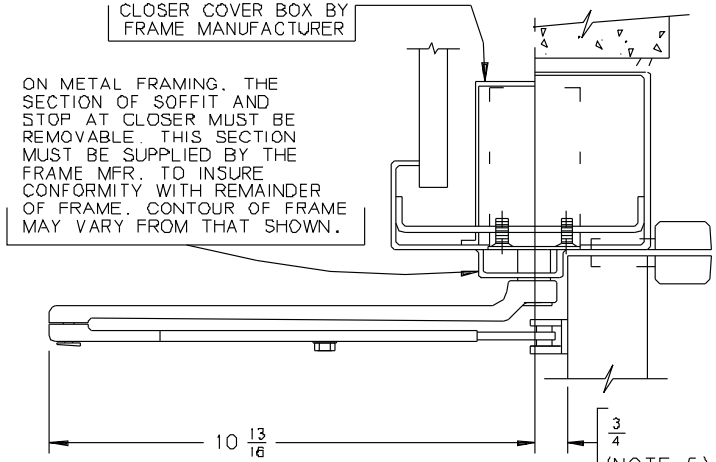

THIS SIDE OF TEMPLATE FOR OPENINGS FROM 101° TO 180° ONLY. NOT TO BE USED WITH DOOR HOLDER.

USE THIS TEMPLATE TO MEET ADA.

FRAME PREPARATION MAY BE IN WOOD, HOLLOW METAL OR ALUMINUM TUBE. CONSULT FACTORY IF FRAME DETAIL IS DIFFERENT.

inch	1/8	5/32	1/4	3/8	1/2	9/16	5/8	23/32	3/4	7/8	1	1 1/32	1 5/16	1 11/16	1 3/4	1 15/16
mm	3	4	6	10	13	14	16	18	19	22	25	26	33	43	44	49

inch	2	2 1/16	2 9/32	2 1/2	3 5/8	4 21/32	5 15/32	5 17/32	6	7 1/32	7 11/16	7 23/32	10 13/16	12	13 1/4	14
mm	51	52	58	64	92	118	139	140	152	179	195	196	275	305	337	356

No.	REVISION	BY	DATE
1	CAD CONVERSION	CTB	6/93
2	TEMPLATE UPDATE	JEJ	6/96
3	TEMPLATE UPDATE	AMM	2/98
4	REMOVED PIVOT INFO.	AMM	5/01
5	REMOVED H180 ARM	JDT	9/09

APP BY JEJ 6/96

DO NOT SCALE

OVERHEAD CONCEALED CLOSER WITH STANDARD ARM & OFFSET PIVOTS

5010-OP (101°TO180°)

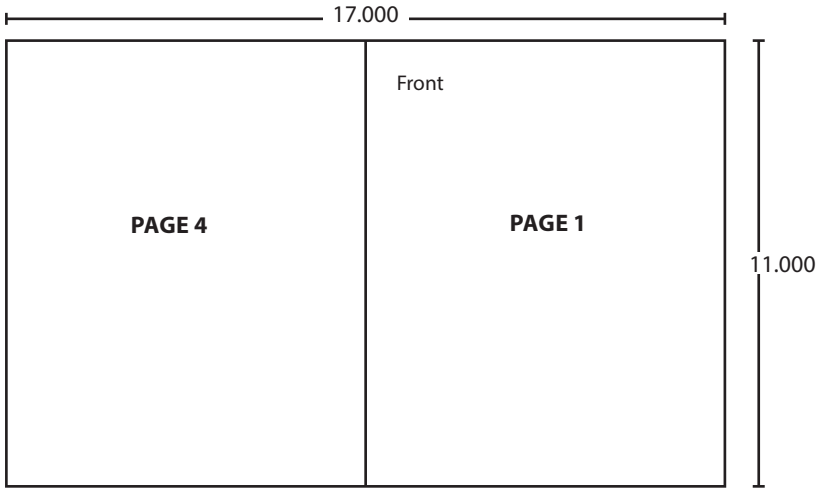

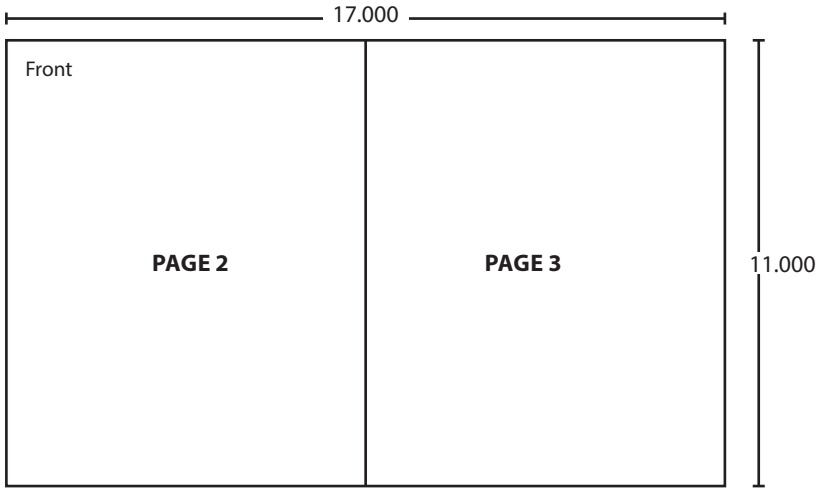

BEGINNING SHEET

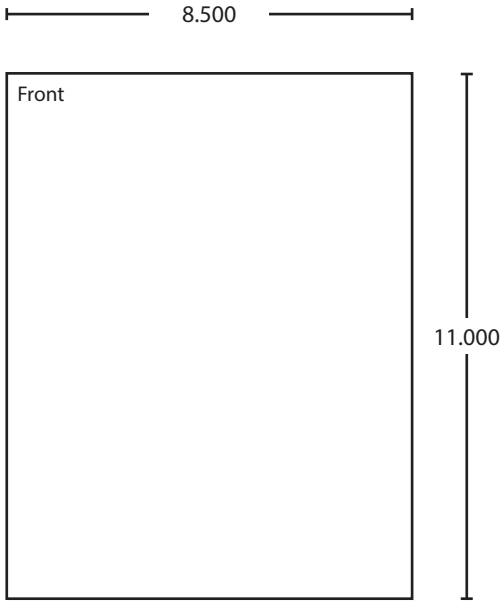

FOLDED SHEET

Additional Notes:
1. None

Revision History					
G	H	J	K	L	M
042801					

Revision Description:
G > Revised artwork

Material
White Paper

Edited By	Approved By	EC Number	Release Date
J. Ellis	M. Roberts		06-10-15

Notes
1. printed two sides
2. printed black
3. tolerance ± .13
4. saddle-stitched two sheets
5. drawings not to scale

Title
5010 Series Installation Instructions

Creation Date	Number	Revision
11-01-03	13187	H

Created By
N/A

Software: InDesign CS6

Activity
3899 Hancock Expwy
Security, CO 80911

© Allegion 2015