28101

4600 Electronic Low Energy Operator

4630, 4640 Electric Auto Equalizer Series

Installation Instructions

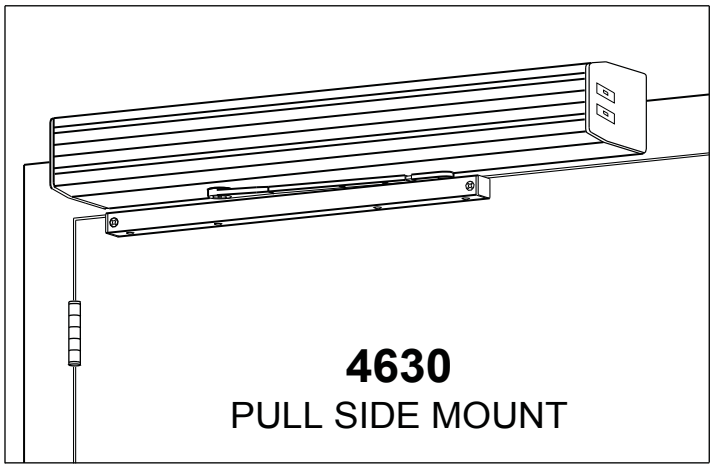

4630
PULL SIDE MOUNT

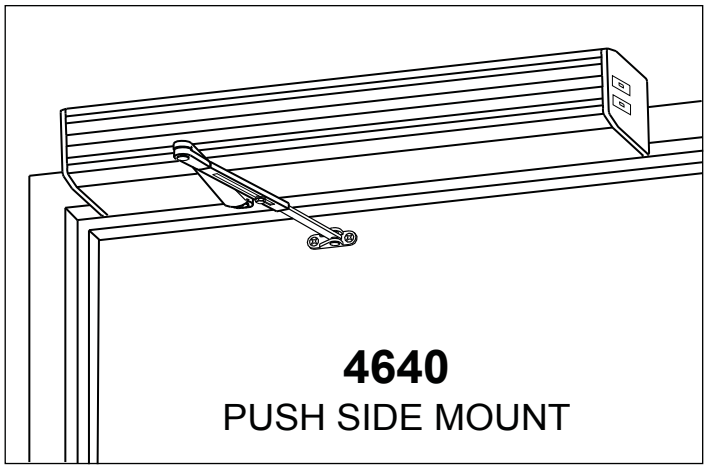

4640
PUSH SIDE MOUNT

The 4600 Series electric Auto-Equalizer™ series combines all door operator and door control functions in one package. This versatile, easy-to-install system is low maintenance and offers the following features:

- Top jamb mounting on either side of an interior door allows 90° of power opening. (Mounting for exterior door on the inside only)
- Manual opening up to 170° (4630) or 100° (4640).
- Easy access to on / off and hold open switches.
- Quiet, reliable operator delivers consistent performance.
- No expensive service contracts or periodic maintenance required.
- Fail safe operator acts as a standard door closer in event of power outage.
- Low energy operator does not require guard rails or safety mats.
- Advanced, easy-to-install controller module allows independent adjustment of:
  a. Door Opening Speed » Delay / Trigger Time for Sequential Option
  b. Door Opening Force » Electric Strike Delay Time
  c. Hold Open Time » 90° Slow Down
  d. Alternate Action Timeout » Safety Scanner Lockout Time

Table of Contents

Pg. 2 ..... General Information
Pg. 3 ..... Install Mounting Plate
Pg. 4 ..... 4630 Template
Pg. 5 ..... 4640 Template
Pg. 6 ..... Installing Closer Assembly
Pg. 7-8 ..... 4600 Series Arm Installation
Pg. 9 ..... Closer Regulation & Power Adjustment
Pg. 10 ..... Controller Installation
Pg. 11 ..... Electrical Connections
Pg. 12-13 .... Typical Wiring
Pg. 14 ..... Auxiliary Electrical Device Wiring
Pg. 15 ..... Controller Setting Adjustment
Pg. 16-17 ... Controller Programming
Pg. 18 ..... Basic Operation & Cover Installation
Pg. 19 ..... Illustrated Parts List

Customer Service

1-877-671-7011 www.allegion.com/us

This installation instruction sheet is a valuable reference and should not be discarded. It should be given to building owner or maintenance supervisor after installation is complete.

General Information

The 4600 series Auto-Equalizer™ is designed to meet the following codes & standards:

- ANSI A156.19, section 2.1
- ANSI A117.1, section 4.13.11 requirements.
- ADA law section 4.13.12
- UL listed for use on labeled doors.
- Complies with UL & NEC requirements for Class 1 (high voltage) & Class 2 (low voltage) by providing separate conduit connections for each.

Both the 4631 & 4642 are non-handed, non-sized door operators that provide all the standard features of a heavy duty LCN door closer; including independent adjustment of backcheck, main speed and latch speed functions as well as adjustable closing power: 4631 (size 1 to 4) / 4642 (size 2 to 5). Both models are shipped with LCN's "Ultra X" all-weather hydraulic fluid for reliable operation at a wide range of temperatures. Requirements for installation are as follows:

- The 4631 is designed for pull side installation on the top jamb and requires a minimum door width of 36" and a 2" min. head frame. Top rail of door must be 1 ⅛" min. and butt hinge size should not exceed 5". Maximum pull side reveal of ⅛". Maximum door weight is 225 lbs.
- The 4642 is designed for push side installation on the top jamb for both standard and flush ceiling conditions. It requires a minimum door width of 36" and a 1 ¾" min. head frame. Top rail of door must be at least 1 ¾" and butt hinge size should not exceed 5". The 4642 accommodates reveals up to 4 ½". For reveal depths of 4 ½" - 8", requires 4642 L (Long Arm). For reveal depths greater than 8" - consult factory. Maximum door weight is 225 lbs.

The 4600 series can accommodate both surface and concealed wiring applications. **It requires 120VAC supplied to the operator.** Maximum AC current load is 1 amp. A built-in 12VDC & 24VDC power supply (rated for 1 amp combined current load) can power peripheral actuators, electronic strikes or mag-lock devices. The 4600 series is compatible with all LCN 8300 series actuators and scanners. High-security card readers or keypads may also be used as actuators. The 4600 series will accept inputs from a wide variety of security systems, allowing security personnel to regulate accessability. A 4600 will accept a fire alarm input to deactivate unit when fire alarm is triggered. A circuit breaker and resettable fuses protect high-voltage inputs and low-voltage output circuits, respectively. To ensure proper electrical functions, installation should be made when temperature is between 35° F up to 120° F.

The 4600 series installation has three sections:

Section 1 - Fastening mounting channel to frame / electrical connections.

Section 2 - Installing closer body & arm assembly

Section 3 - Installation of controller and adjustment of settings.

Follow all instructions carefully. Failure to do so may result in personal injury or property damage. Use extreme caution when dealing with high voltage. High voltage connections should be made by a qualified professional. Closer and controller adjustments might be necessary to meet ANSI A156.19 requirements. To verify the force requirements, a force gauge is needed. If you have any questions, call LCN at 866 - 671 - 7011.

NOTICE:

The following procedures involve electrical connections and running conduit for both high & low voltage wiring. **Electrical power must be disconnected** during the installation of the 4600 series door operator. It is also important to examine the proper template for your installation to determine the mounting channel position and correct conduit location.

SECTION 1
SECURING MOUNTING PLATE ASSEMBLY TO FRAME

NOTE: Before beginning installation, determine which conduit connection option is to be used.

CONCEALED WIRING:

Both high & low voltage conduit lines should be run to door frame and made accessible through two holes to be drilled in frame per proper template on page 4 or 5.

SURFACE WIRING:

Mounting channel must be mounted to frame **BEFORE** running high & low voltage conduit lines to the operator.

1. Prepare door and frame per template on page 4 for 4630/ page 5 for 4640. Be sure all holes are located correctly before drilling and/or tapping. Mounting surface of frame must be vertically level. Conduit access holes in frame are for **CONCEALED WIRING ONLY!** If using concealed wiring option, see step 2 below. **FOR SURFACE WIRING**, proceed to step 3.
2. Refer to correct template to determine proper location for conduit. Remove appropriate conduit plugs, exposing conduit holes in back of mounting channel, as shown in **Fig 1**. Attach 1/2" conduit to mounting channel, as shown in **Fig 2**. Place mounting channel into position on frame. Once mounting channel is in position and flush on frame, insert fasteners and tighten securely.

NOTE: The conduit set-up shown is for a 4630 mounting. Conduit location will vary with other mountings.

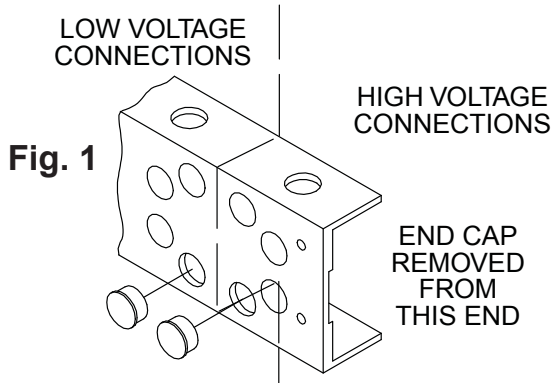

Fig. 1

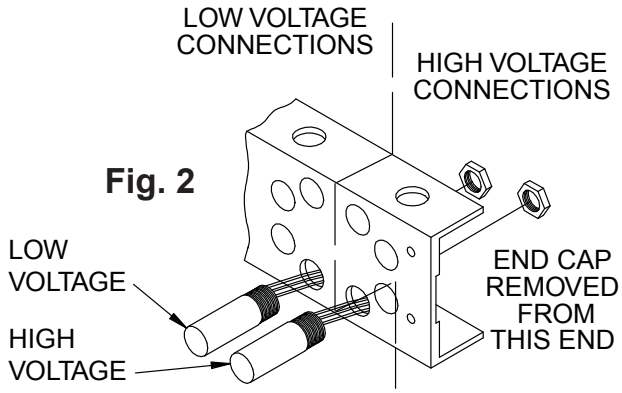

Fig. 2

3. Position mounting channel on frame, connect conduit and tighten securely.

CONDUIT THROUGH TOP OF MOUNTING CHANNEL:

After mounting plate is attached to frame, run 1/2" conduit to access holes in top of mounting channel. Conduit should be connected to channel as shown here in **Fig. 3**.

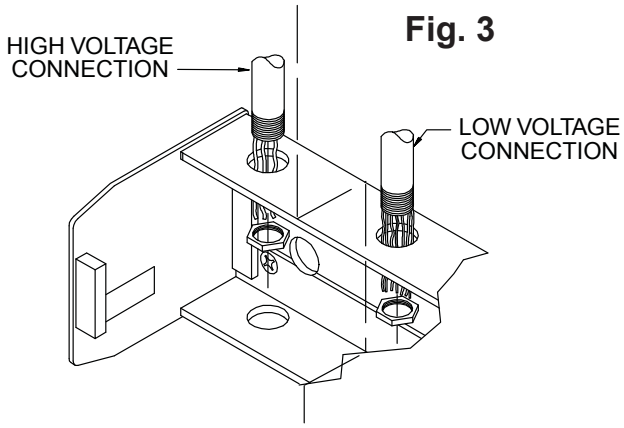

Fig. 3

4630 SERIES
PULL SIDE/TOP JAMB MOUNTED
NON-HANDED AUTO-EQUALIZER™

4630	170° MAXIMUM OPENING 90° POWER OPENING

AUXILIARY STOP RECOMMENDED

LEFT HAND DOOR AND CLOSER SHOWN, RIGHT HAND OPPOSITE

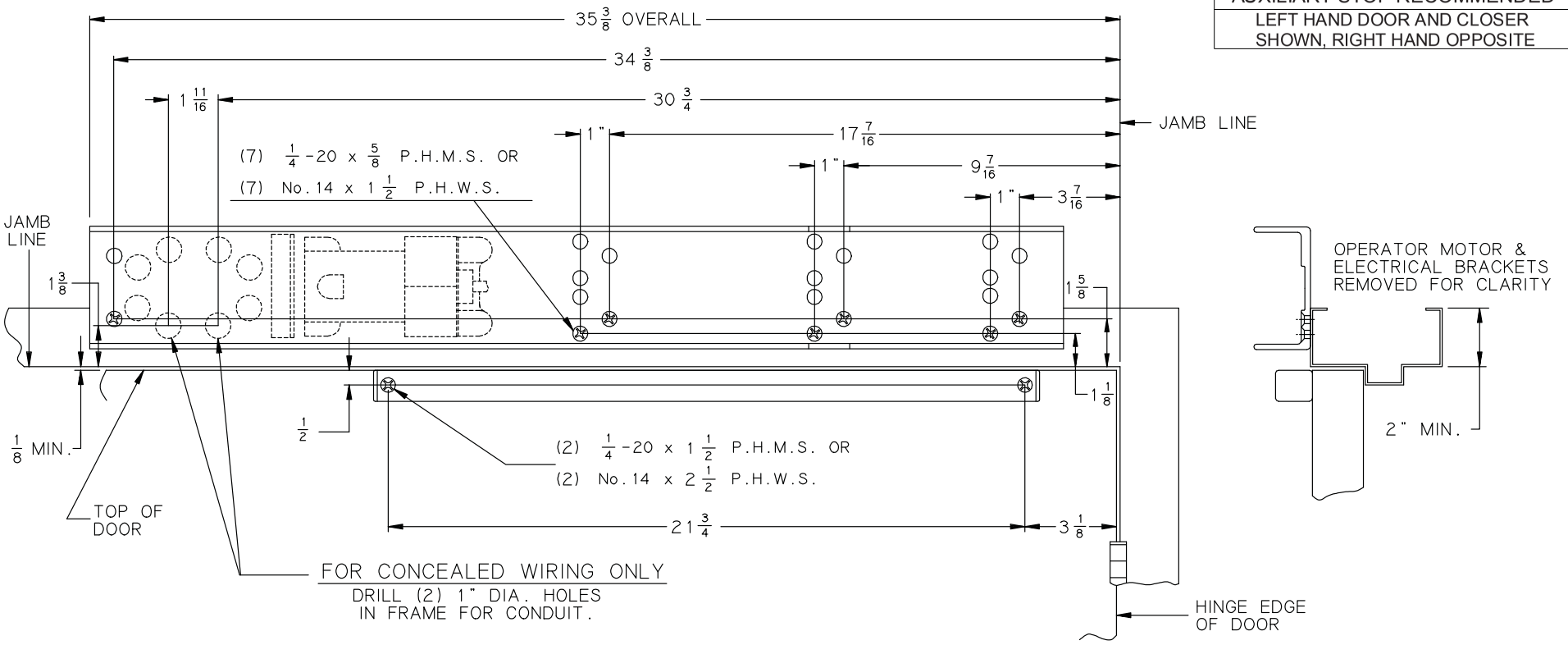

1. VOLTAGE SUPPLIED TO FRAME MUST CORRESPOND TO VOLTAGE OF OPERATOR.
2. MAXIMUM BUTT SIZE IS 5".
3. MINIMUM DOOR WIDTH IS 36".
4. AUXILIARY STOP RECOMMENDED AT MAXIMUM OPENING POINT(170°).
5. LOCATE OPERATOR AND TRACK FROM CENTER LINE OF SWING CLEAR HINGE PIN IF USED.
6. CONSULT FACTORY IF DOOR IS HUNG ON PIVOTS OR WIDE THROW HINGES.
7. REINFORCING PER ANSI/SDI-100 RECOMMENDED FOR HOLLOW METAL DOORS AND FRAMES.
8. OVERALL OPERATOR SIZE: 33 1/2" X 4 3/8" X 5 3/16".

INCH	1/8	1/4	1/2	5/8	1	1 1/8	1 3/8	1 1/2	1 5/8	1 11/16	2	2 1/2	3 1/8
M.M.	3	6	13	16	25	28	35	38	42	43	51	64	79

INCH	3 7/16	4 3/8	5	5 3/16	9 7/16	17 7/16	21 3/4	30 3/4	33 1/2	34 3/8	35 3/8	36
M.M.	87	112	127	132	240	443	552	781	850	873	900	915

LCN®

4640 SERIES PUSH SIDE/TOP JAMB MOUNTED
NON-HANDED AUTO-EQUALIZER™
REGULAR/FLUSH CEILING MOUNTS

PUSH SIDE/TOP JAMB MOUNT	
4640	100° OPENING MAX. 90° POWER OPENING

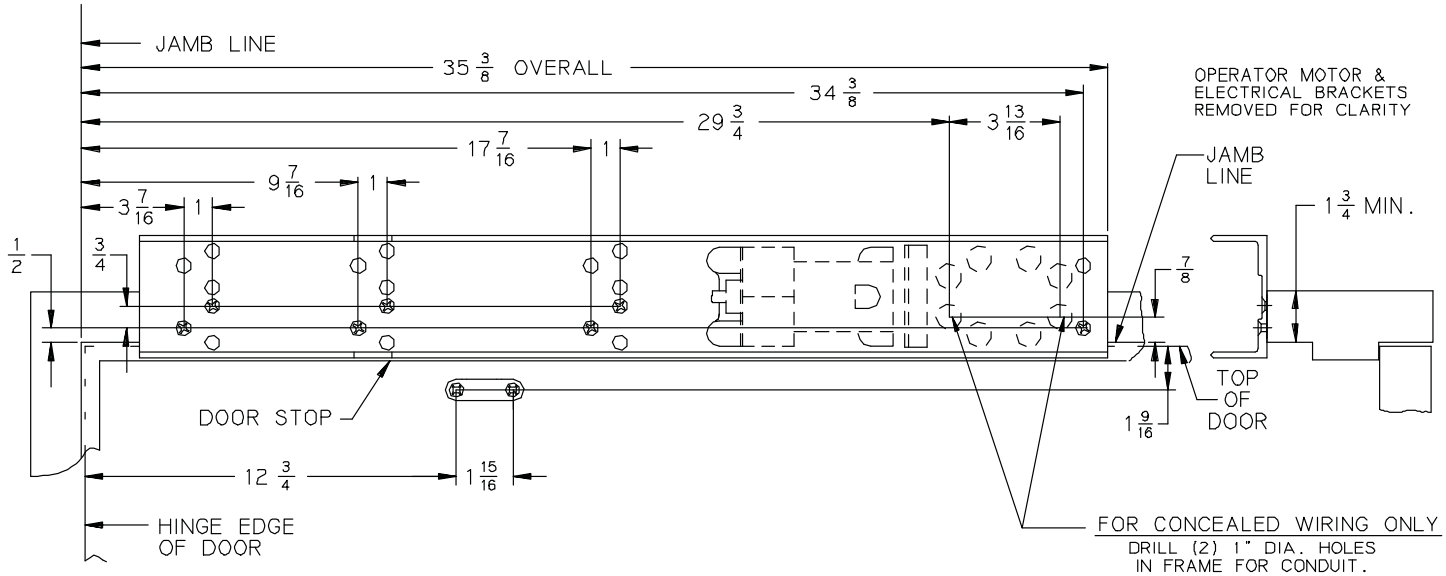

LEFT HAND SHOWN, RIGHT HAND OPPOSITE

PUSH SIDE/TOP JAMB MOUNT	
4640	100° OPENING MAX. 90° POWER OPENING

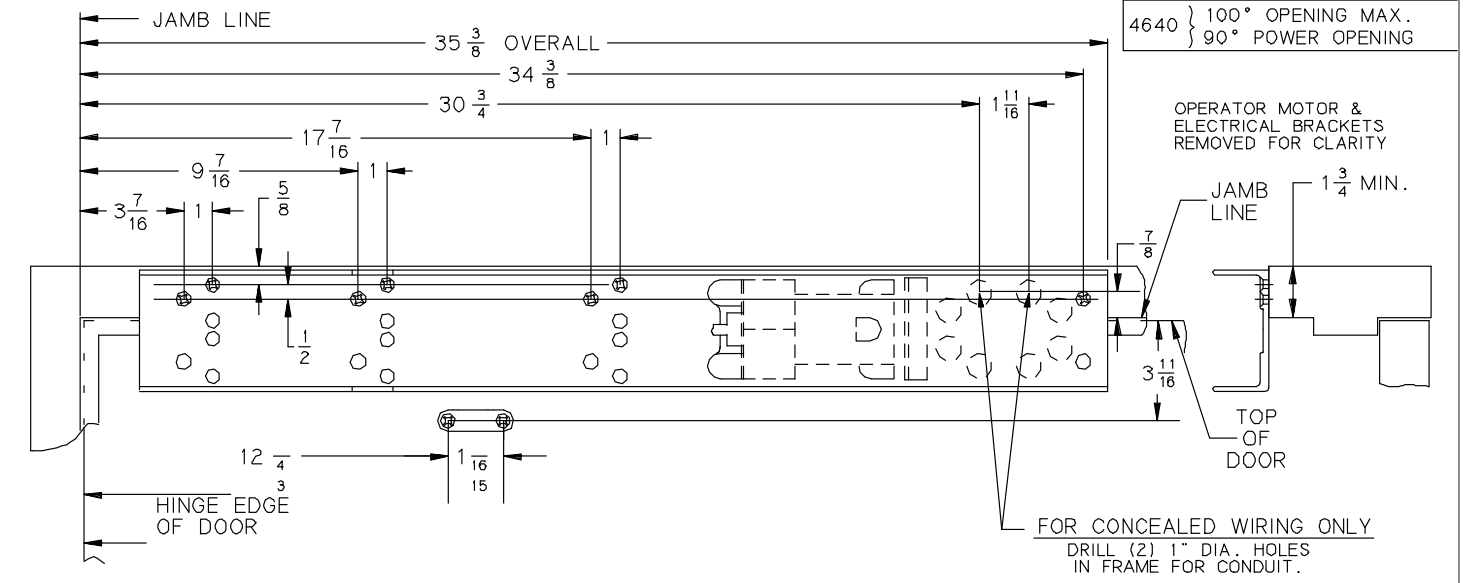

LEFT HAND SHOWN, RIGHT HAND OPPOSITE

1. VOLTAGE SUPPLIED TO FRAME MUST CORRESPOND TO VOLTAGE OF OPERATOR.
2. MAXIMUM BUTT SIZE IS 5".
3. MINIMUM DOOR WIDTH IS 36".
4. MAXIMUM STOP THICKNESS IS 5/8".
5. MAXIMUM REVEAL DEPTH IS 4 ½"UP TO 8" REVEALS WITH LONG ARM OPTION, CONSULT FACTORY.
6. AUXILIARY STOP RECOMMENDED AT MAXIMUM OPENING POINT (100°).
7. LOCATE OPERATOR & SHOE FROM THE CENTERLINE OF SWING CLEAR HINGE PIN IF USED.
8. CONSULT FACTORY IF DOOR IS HUNG ON PIVOTS OR WIDE-THROW HINGES.
9. REINFORCING PER ANSI/SDI-100 RECOMMENDED FOR HOLLOW METAL DOORS & FRAMES.
10. OVERALL OPERATOR SIZE: 33 ½"X 4 3/8" X 5 3/16".

INCH	1/4	1/2	5/8	3/4	7/8	1	1 1/2	1 9/16	1 11/16	1 3/4
M.M.	6	13	16	19	22	25	38	40	43	44

INCH	1 15/16	3 7/16	3 11/16	3 13/16	4 3/8	4 1/2	5	5 3/16	8
M.M.	49	87	94	97	112	114	127	132	204

INCH	9 7/16	12 3/4	17 7/16	29 3/4	30 3/4	33 1/2	34 3/8	35 3/8	36
M.M.	240	324	443	756	850	857	873	900	915

SECTION 2

INSTALLING CLOSER ASSEMBLY

1. At this point of the installation, the mounting channel assembly should be attached securely to door frame. All electrical connections at the unit should be hooked up, but **UNPOWERED**.
2. **CLOSING FORCE ADJUSTMENT:** (See **Fig. 4**). Turn spring adjustment clockwise the required number of turns to match door width as shown in **Tables 1 & 2**. Maximum adjustments: 14 turns clockwise.

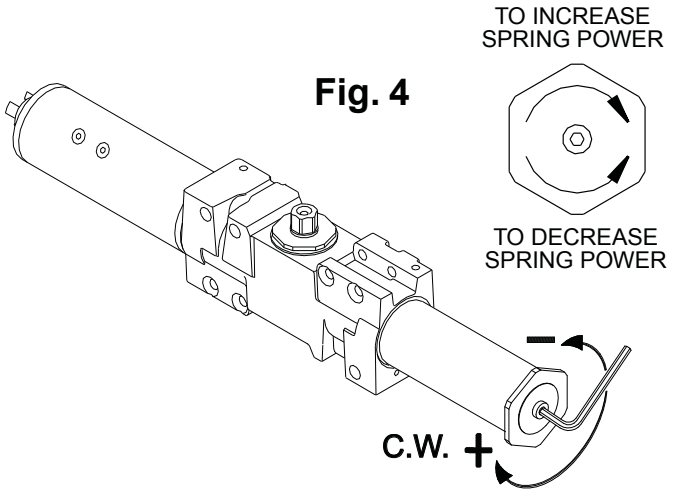

Fig. 4

Verify that closing force is not more than 15 lbs when measured one inch from door edge to comply with ANSI A156.19.

TABLE 1

INTERIOR DOOR	
MAXIMUM DOOR WIDTH	NUMBER OF TURNS
36”	0
48”	2 TURNS C.W.
54”	7 TURNS C.W.

TABLE 2

EXTERIOR DOOR	
MAXIMUM DOOR WIDTH	NUMBER OF TURNS
36”	2 TURNS C.W.
42”	7 TURNS C.W.

NOTE: Do not allow any form of lubricant to come into contact with any part of clutch assembly.

NOTE: Electrical components not shown.

3. Mount closer to mounting channel assembly. Closer and clutch gear coupler’s should mesh loosely as shown in **Fig. 5** above. Line closer mounting holes up with holes in stand-offs attached to mounting channel. Fasten with (4) 1/4 - 20 x 2 5⁄16”machine screws provided and tighten securely.
4. **It is extremely important that closer is properly aligned with motor/clutch assembly.**

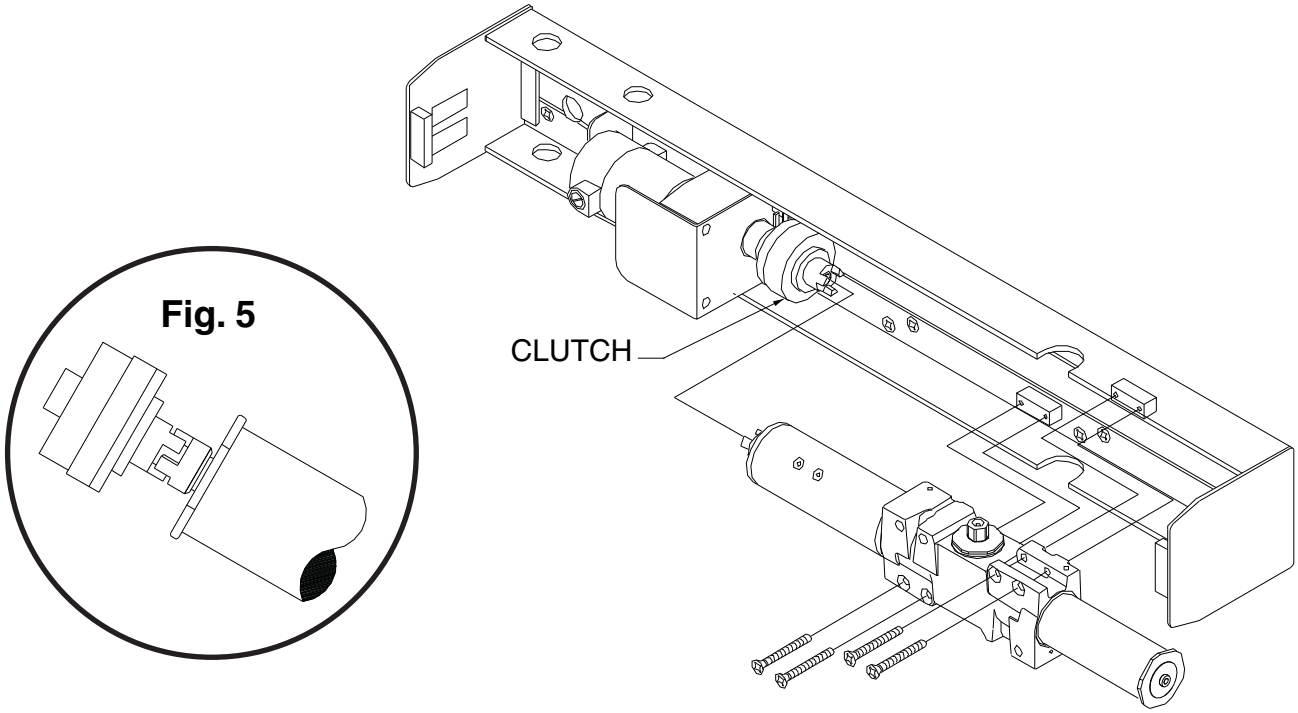

Fig. 5

NOTE: Right hand door shown, left hand will be opposite.

Fig. 6

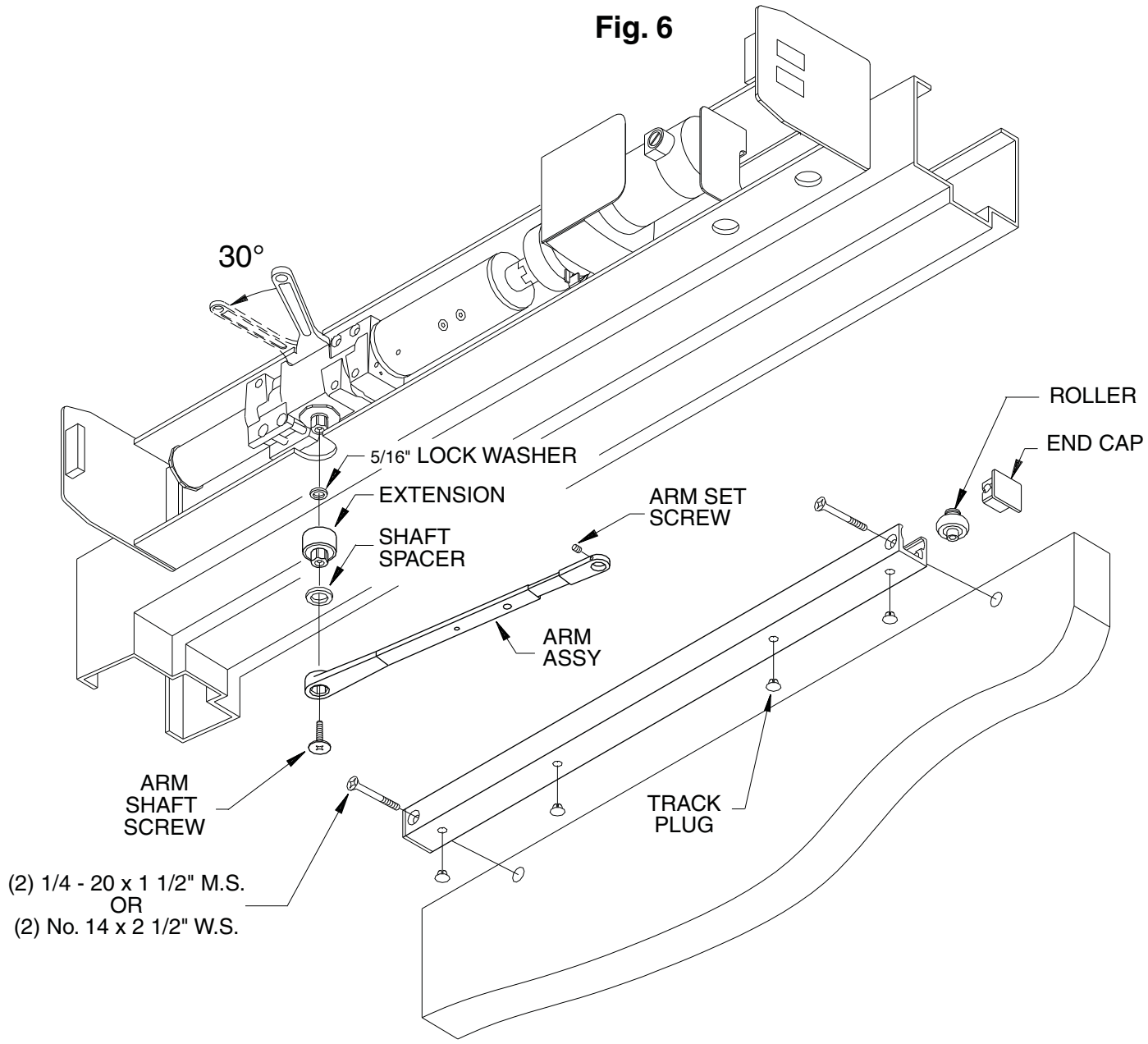

1. Insert (4) track plugs into bottom of track, as shown in **Fig. 6** above. Remove track end cap, insert track roller and replace end cap.
2. Mount track assembly to door, attaching securely with either (2) 1/4-20 x 1 ½" machine screws or (2) No. 14 x 2 ½" wood screws provided.
3. Locate SHAFT EXTENSION, LOCK WASHER, SPACER & ARM SHAFT SCREW in fastener box. Fit arm and spacer onto shaft extension. Place lock washer into the shaft extension so it locates between closer shaft and shaft extension. Place wrench on top closer shaft and rotate approx. 30°, as shown above. Fit arm assembly over closer shaft and fasten with arm shaft screw as shown in **Fig. 6** above.
4. Open door partially. Pull closer arm away from frame. Fit hole in end of arm over the stud of track roller. Tighten arm set screw, attaching arm to track.
5. Proceed to **REGULATION INFORMATION** on page 9.

NOTE: Left hand door shown, Right hand will be opposite.

Fig. 7

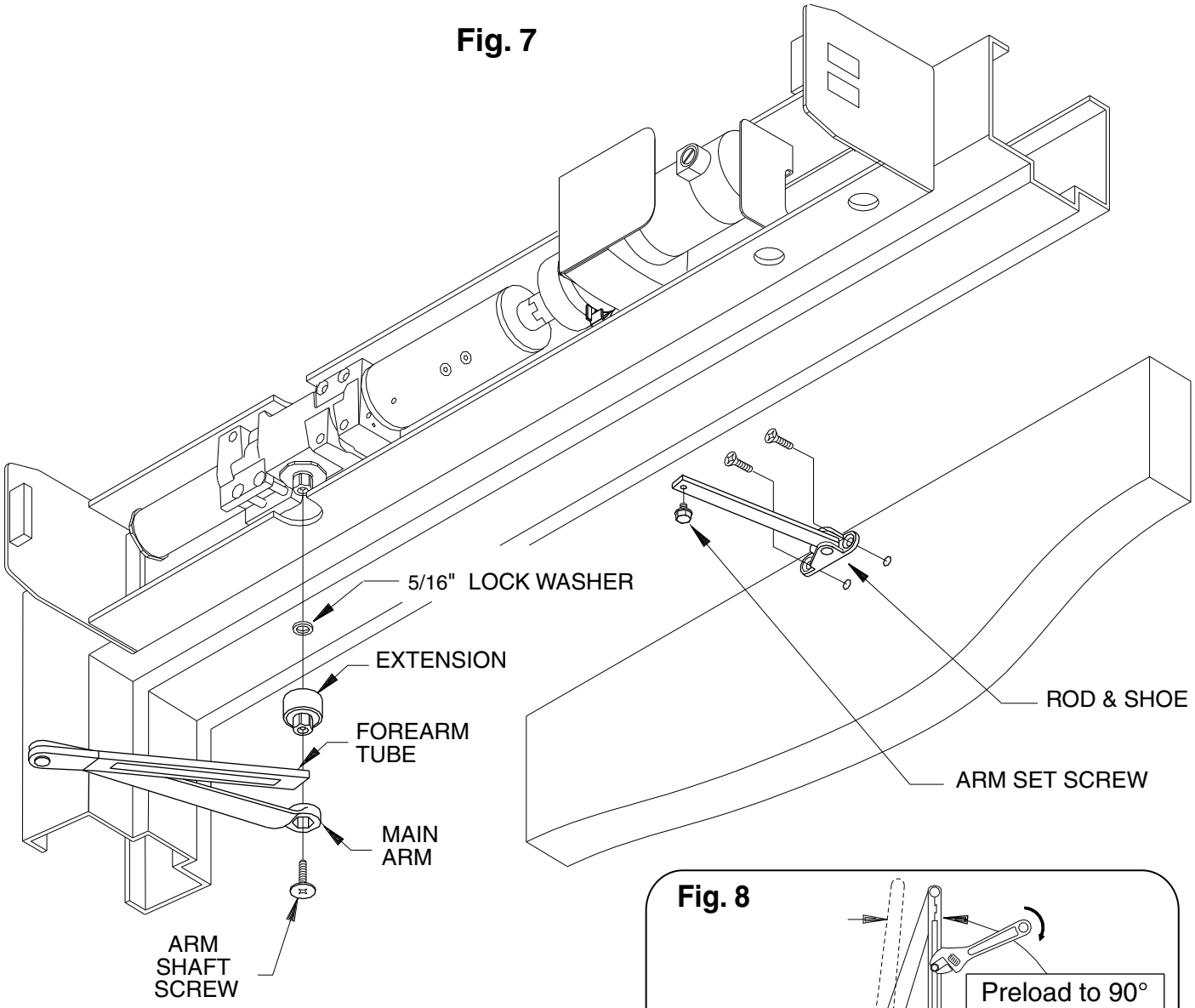

Fig. 8

1. Locate SHAFT EXTENSION, LOCK WASHER & ARM SHAFT SCREW in fastener box. Fit arm onto shaft extension. Place lock washer into shaft extension so it will rest between closer shaft and shaft extension. Fit arm assembly over closer shaft so main arm is positioned at approx. 90° to operator assembly and fasten with arm shaft screw, as shown in **Fig. 7** above.
2. Attach rod & shoe assembly to door with (2) 1/4 - 20 x ⅝"" machine screws or (2) No. 14 x 1 ½" wood screws provided. The longer end of shoe should point towards hinge edge, as shown above.
3. Open door partially, insert rod into forearm tube, then close the door.
4. Insert arm set screw into rod and finger tighten. Preload arm to 90°, as shown in **Fig. 8** above. Holding arm in this position, place a wrench on arm set screw and tighten securely.
5. Proceed to **REGULATION INFORMATION** on page 9.

DOOR CLOSER HYDRAULIC REGULATION & POWER ADJUSTMENT

1. **CLOSING SPEED ADJUSTMENT:** (See **Fig. 9**)
   The hydraulic regulation of the 4600 series has been adjusted prior to shipment. To meet ANSI A156.19 table 1 requirements, open door to 90° and determine the closing time. Make sure the spring power and closing speed are correct. If adjustments are necessary, use 3/32 allen wrench provided and refer to door diagram shown in **Fig. 9**. Turn **MAIN SPEED & LATCH SPEED** screws clockwise to slow door speed, counter-clockwise to increase speed. The installation of the controller will make the **MAIN** and **LATCH SPEED** regulating screws inaccessible.

NOTE: Do not back regulating screws out of closer or an oil leak will occur

Fig. 9

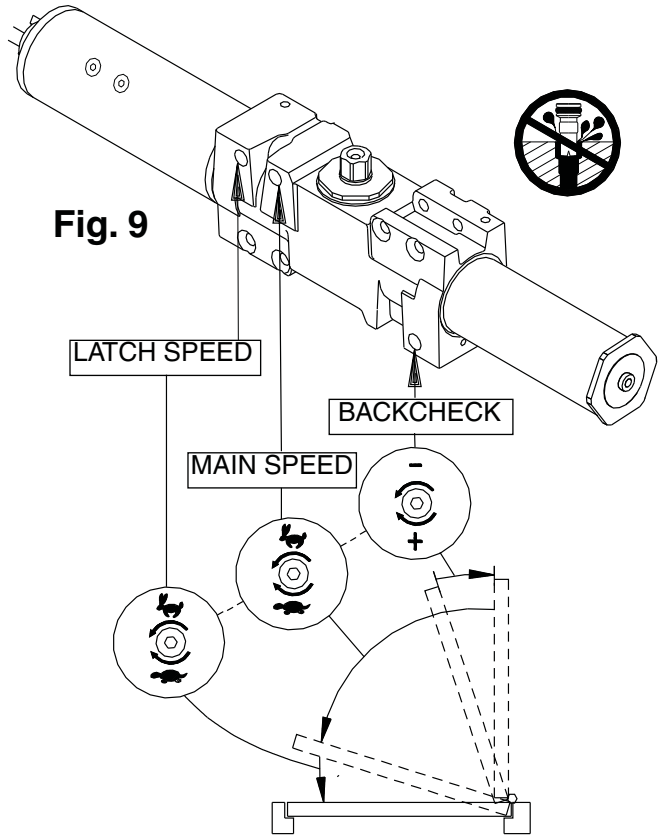

2. **BACKCHECK ADJUSTMENT:**
   Backcheck slows the door swing as it approaches full opening. Adjust the backcheck setting only if necessary. Increase backcheck strength by turning **BACKCHECK** screw clockwise by quarter turns. Make sure backcheck adjustments conform to ANSI A156.19 sections 4.2, 4.4, 4.5, and tables I & II. **DO NOT USE AN ABRUPT BACKCHECK SETTING.**
   a. Remove forearm set screw and open door, separating rod from forearm tube.
   b. Remove shoe screws and flip shoe 180° as shown in **Fig. 10**. Re-attach shoe to door.
   c. Re-assemble arm, as in steps 3 & 4 on page 8.
   d. Verify that closing force is no more than 15 lbs when measured one inch from door edge to comply with ANSI A156.19.

Fig. 10
For 4640 series only

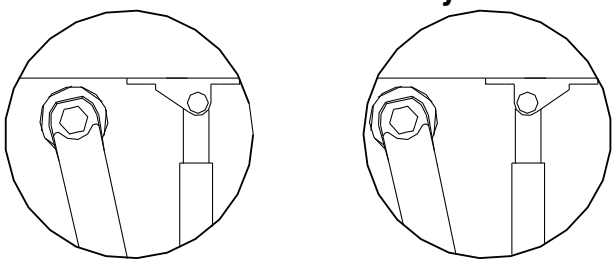

STANDARD INSTALLATION

SHOE POSITIONED FOR INCREASED POWER AT LATCH

LOCATING CAUTION / AUTOMATIC DOOR DECAL

1. Locate one decal on each side of door, near latch area to meet ANSI A156.19-2007 code requirements. Decal must be located at 50” (+/- 12”) from the floor to the center line of the sign. The decal location must be visible without interference from door trim or auxiliary door hardware.
2. Clean the 6” x 6” area where decal is to be placed. Apply decal by removing the backing and “rolling” it onto door. This will help prevent air bubbles from being trapped under decal.



SECTION 3

INSTALLATION & ADJUSTMENT OF CONTROLLER BOARD

NOTE: Be sure electrical power source is disconnected.

1. **MOUNT CONTROLLER TO OPERATOR ASSEMBLY:** Locate controller assembly in shipping carton. Position the controller as shown in **Fig. 11**. Slide onto mounting plate assembly, guiding cut-outs in controller onto mounting pins as shown.
2. Once the front of controller is fitted onto pins, push entire controller into position, as shown in **Fig. 12**. With controller in proper position, insert (1) *unpainted* #8 - 32 x 3/8" flat head screw into bottom of mounting plate, as shown.

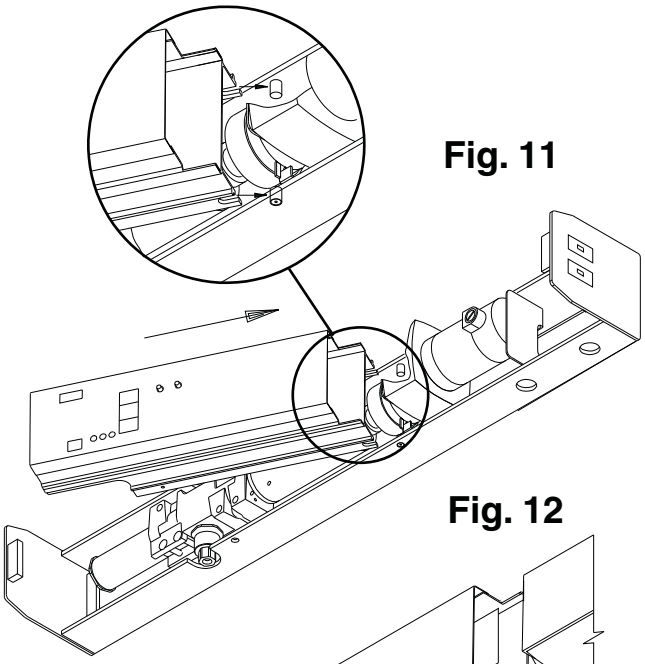

Fig. 11

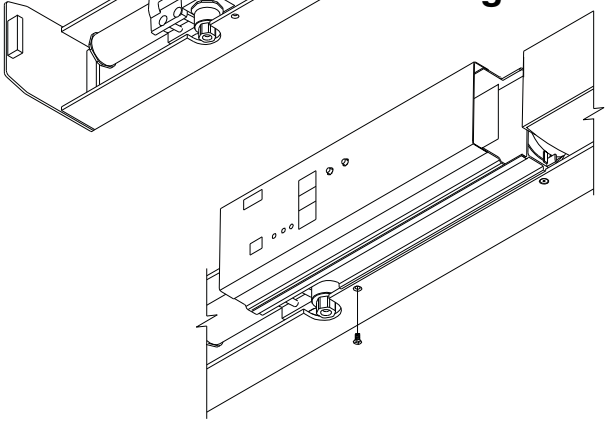

Fig. 12

NOTE: For adjustments to door closer regulating screws, controller must be removed. Do this by: Removing power to operator, unplugging the electrical connections, removing screw, tilting controller away from operator and disengaging controller from mounting pins. Follow steps 1 & 2 above to reattach.

WIRING CONNECTIONS:

1. There will be 3 key wiring harness connectors shipped in the hardware box. The first is a ribbon cable connector. It should be fitted into receptacles on rear board assembly and the controller as shown in **CONNECTION #1** of **Fig. 13**.

Fig. 13

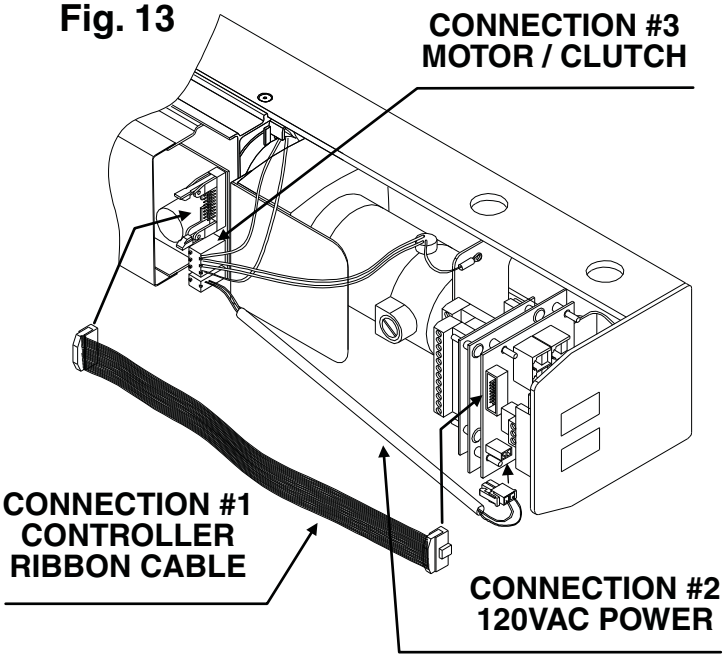

2. **The second connector is a 2 wire lead for the 120 VAC power and should be fitted firmly into into receptacles on rear board assembly and the controller as shown in CONNECTION #2 of Fig. 13.**
3. The third connector is for the motor / clutch. The connector should be fitted firmly into receptacle on the controller as shown in **CONNECTION #3** of **Fig. 13**.
4. Electrical power can now be safely supplied to the 4600 series operator. The controller settings have been pre-set prior to shipment. Adjustment information is detailed on pages 15-17. It will be necessary for the 4600 series door operator to be functional while adjustments and settings are made. Trigger actuator device(s) and check to make sure that door opens freely. Arm assembly motion and door travel should not make contact or have interference with any object.

ELECTRICAL CONNECTIONS - Use copper wire only.

HIGH VOLTAGE ELECTRICAL CONNECTIONS

WARNING

HAZARDOUS VOLTAGE CAN SHOCK AND CAUSE SEVERE INJURY.
Disconnect power before making any electrical connections or performing any maintenance.

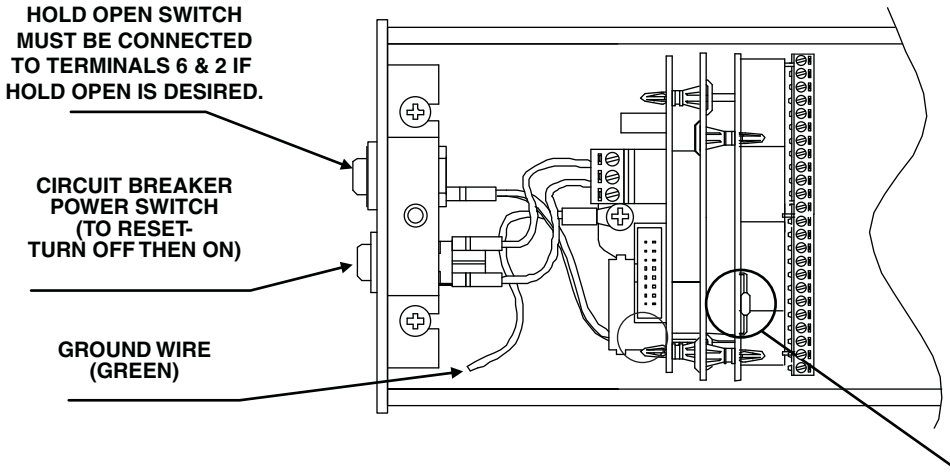

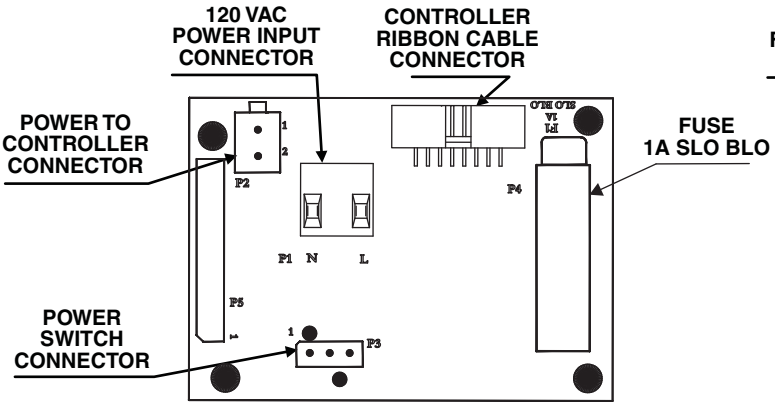

POWER BOARD

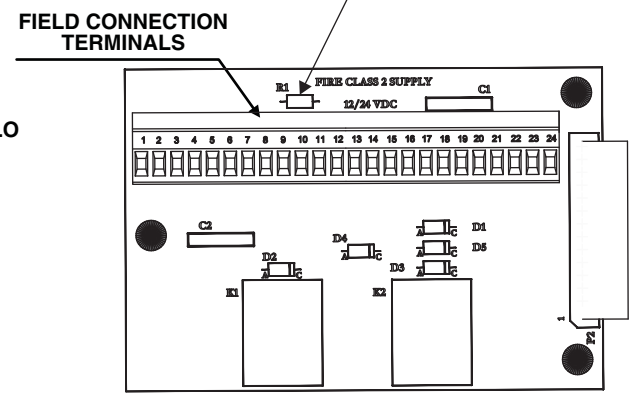

ACTUATOR BOARD

LOW VOLTAGE (CLASS 2 NEC) ELECTRICAL CONNECTIONS

SINGLE DOOR WIRING CONNECTIONS

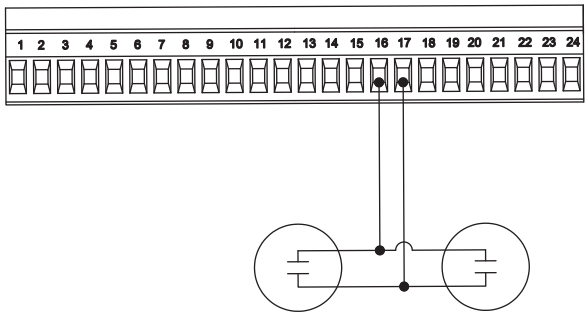

ANY NORMALLY OPEN DRY CONTACT ACTUATOR

FUNCTION	TERMINAL
Actuator - Normal Input (N.O.)	16 & 17 or 18 & 19
Actuator - Sequential Input (N.O.)	8 & 19
Actuator - Alternate Action (N.O.)	15 & 17
Actuator - Continuous (N.O.)	6 & 2
Sequential Output	9
Stop Side Safety (N.O.)	19 & 20
Swing Side Safety (N.O.)	19 & 21
Fire Alarm Contact (N.C.)	13 & 14 (Fire Shunt)
Auxiliary Relay Contacts(5 amp max)	10 - Common
	11 - N.O.
	12 - N.C.
E.S. Relay Contacts(5 amp max)	22 - Common
	23 - N.O.
	24 - N.C.
12V DC & 24V DC Negative*	2, 4, 13, 17, & 19
12V DC Positive*	5 & 7
24V DC Positive*	1 & 3

* Note: 1 Amp max load between 12V and 24V DC outputs

SIMULTANEOUS PAIR WIRING CONNECTIONS

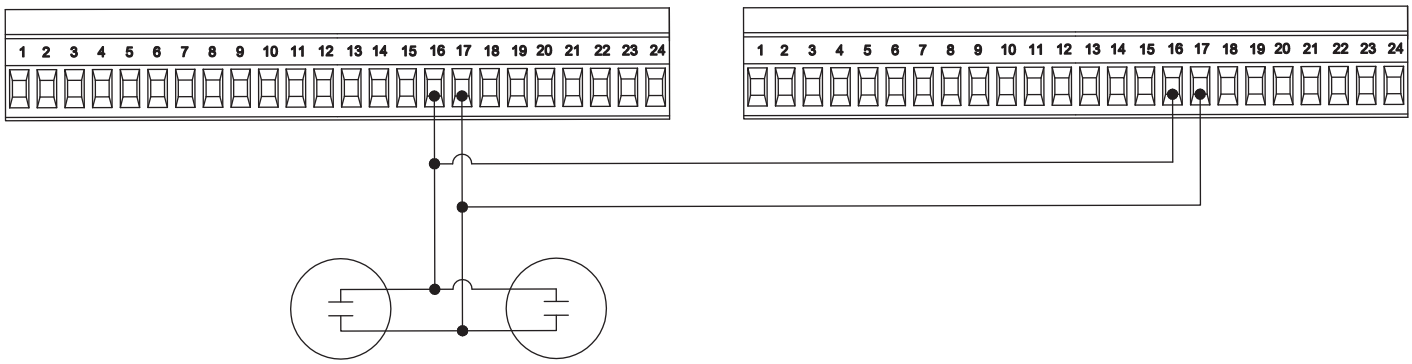

SEQUENTIAL WIRING CONNECTIONS - SIMULTANEOUS VESTIBULE

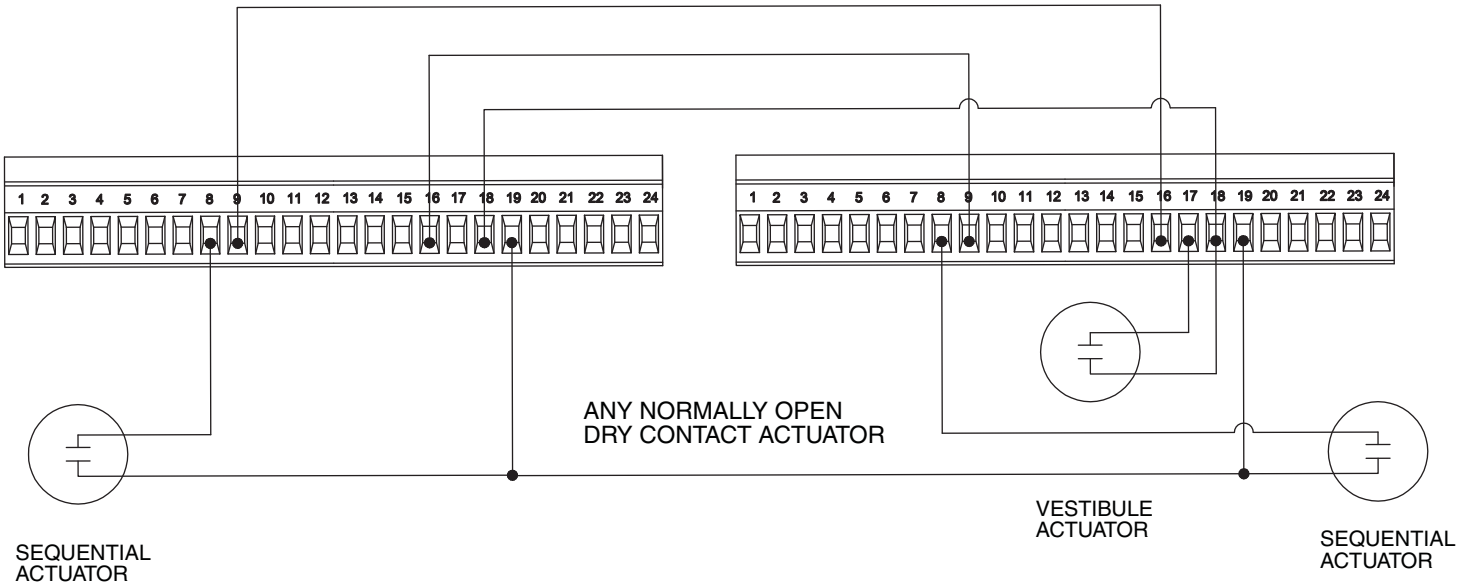

SEQUENTIAL WIRING CONNECTIONS - INDEPENDENT VESTIBULE

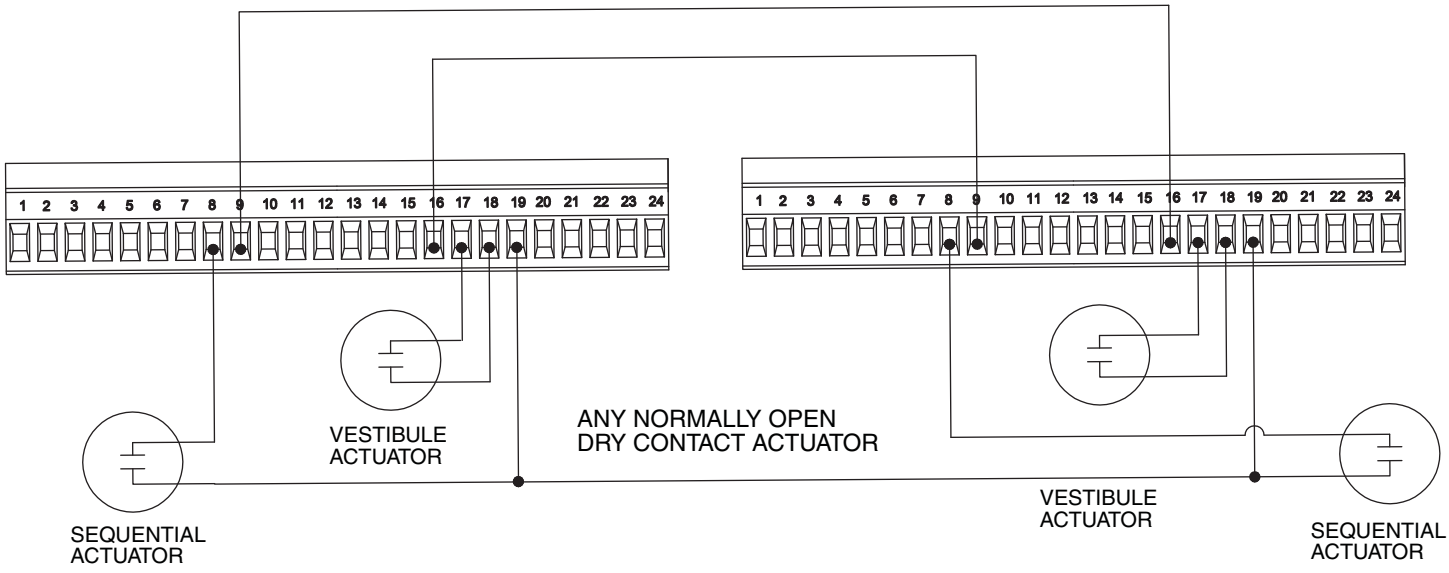

SEQUENTIAL PAIR WIRING CONNECTIONS - SIMULTANEOUS VESTIBULE

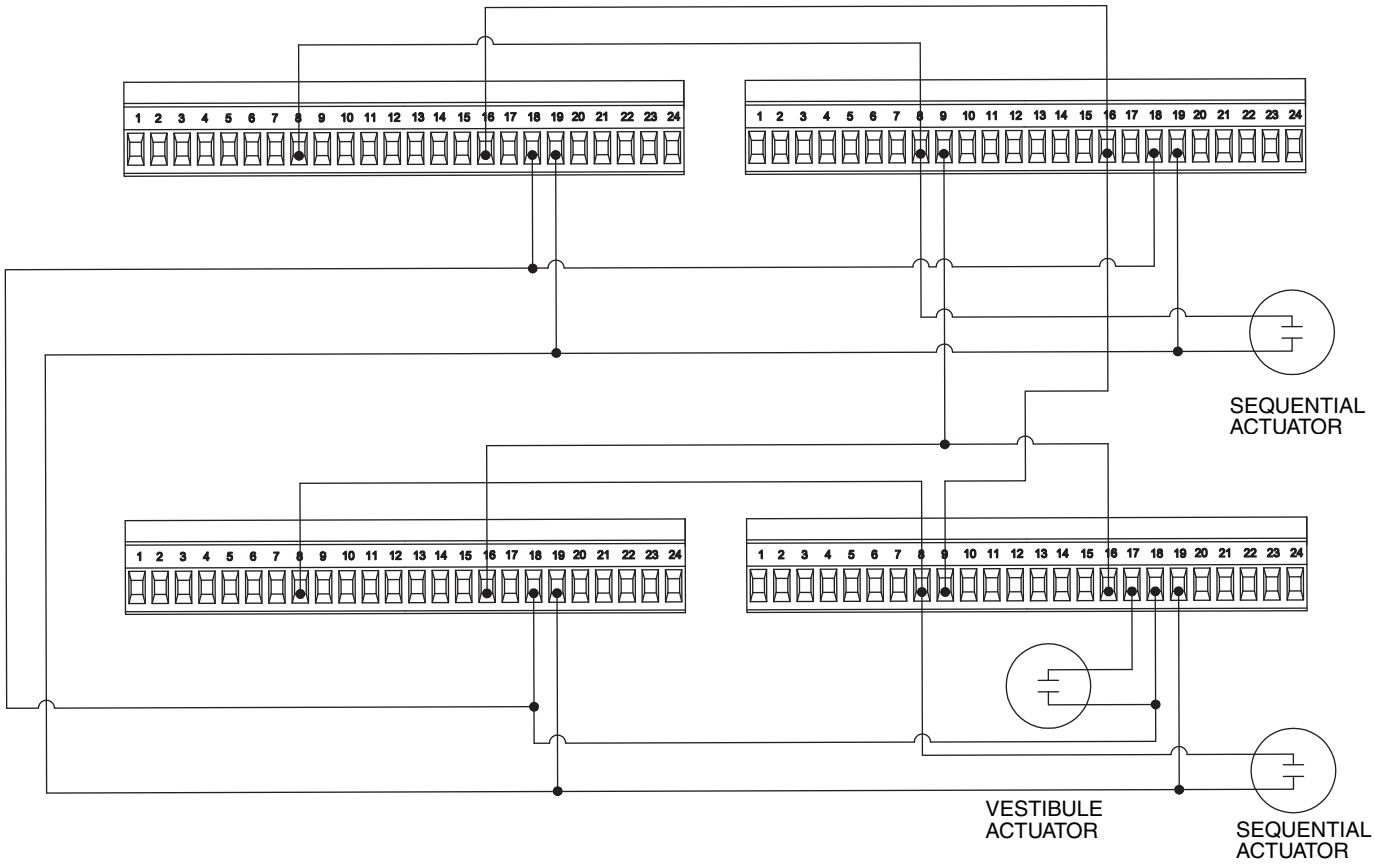

SEQUENTIAL PAIR WIRING CONNECTIONS - INDEPENDENT VESTIBULE PAIRS

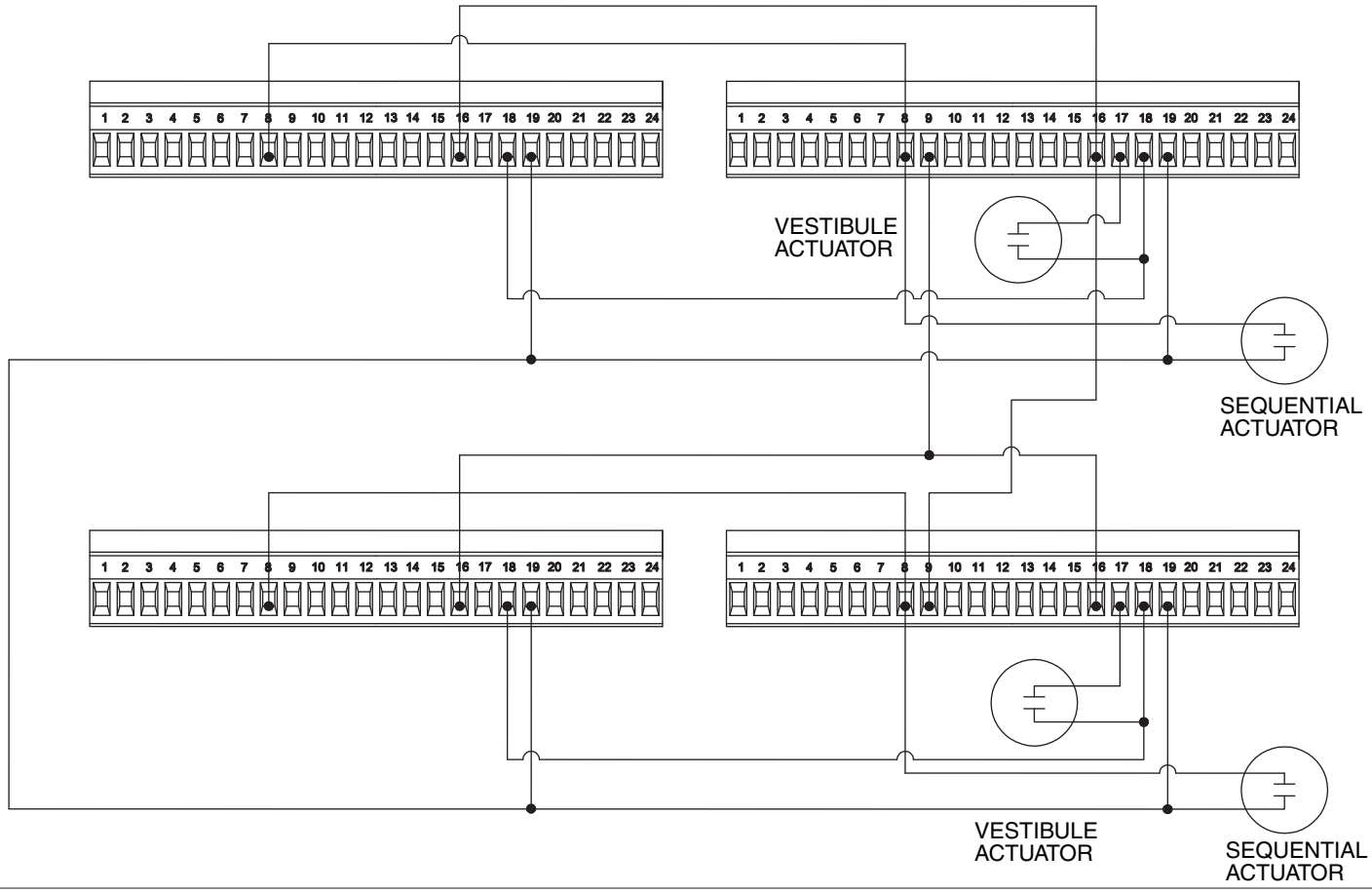

WIRING INFORMATION FOR ELECTRONIC LATCHING DEVICES

12V or 24V power supply by others

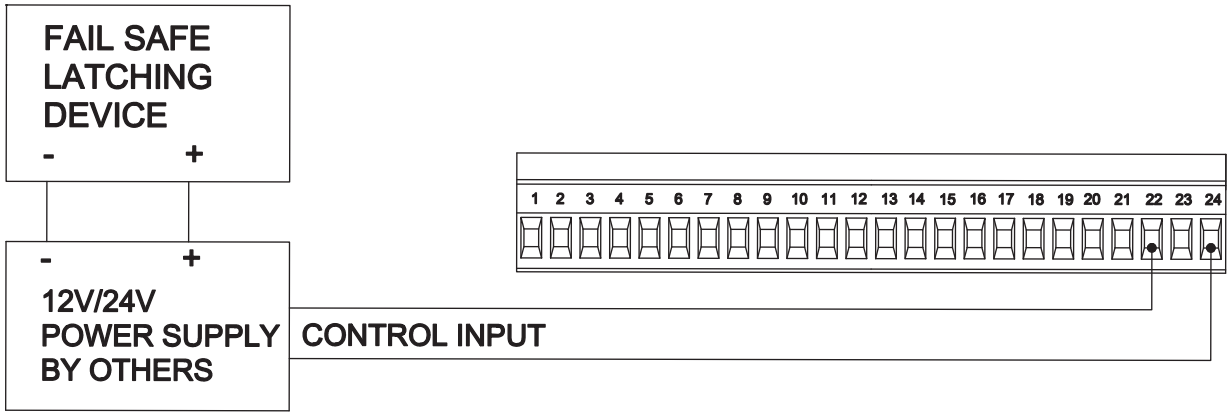

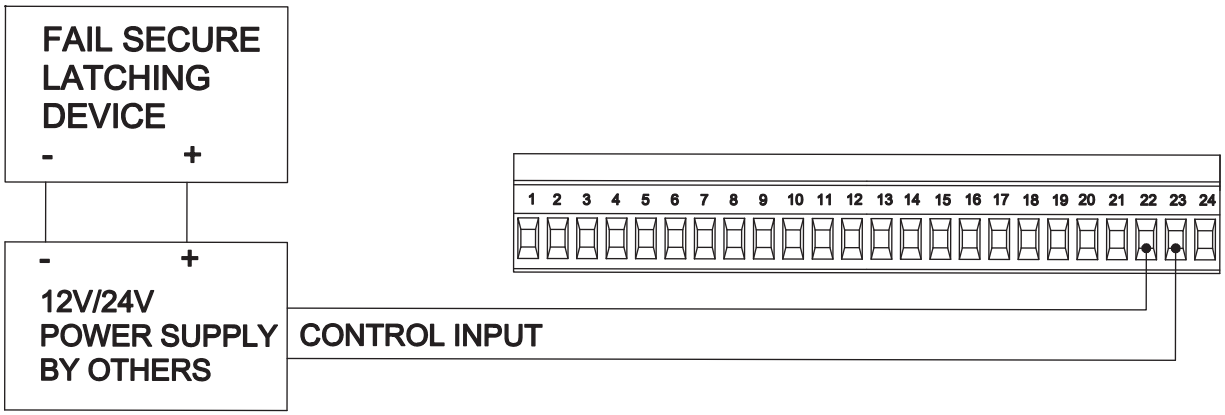

WIRING INFORMATION FOR ELECTRIC STRIKE / MAG-LOCK SYSTEM

24V DC

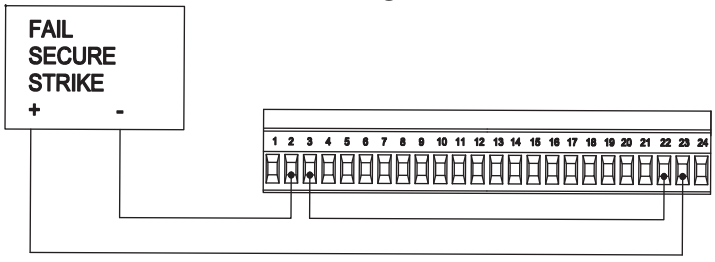

12V DC

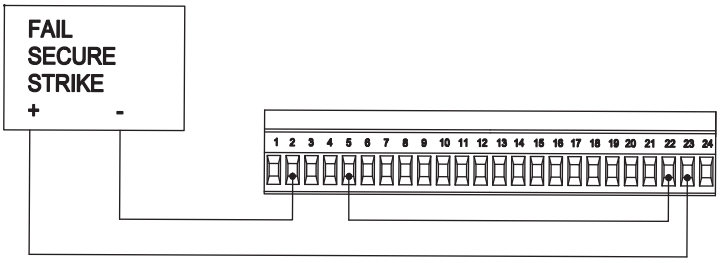

24V DC

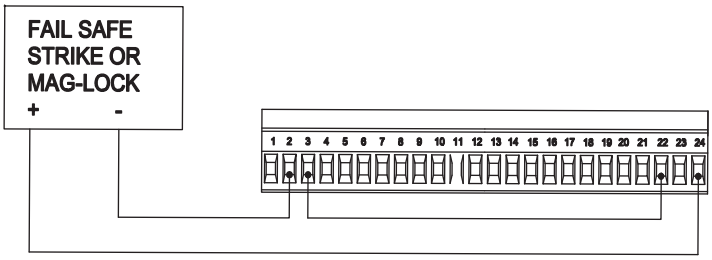

12V DC

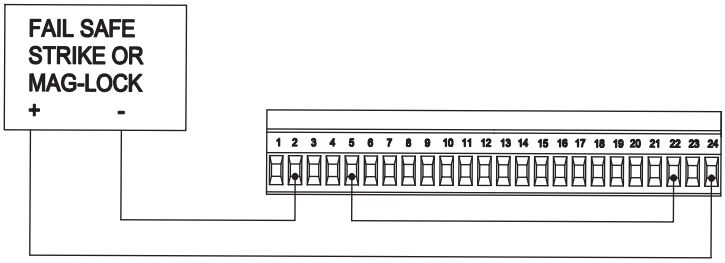

FOR ADDITIONAL WIRING INFORMATION CONTACT LCN CLOSERS ELECTRICAL APPLICATIONS DEPT. AT 866 - 671 - 7011

CONTROLLER SETTING ADJUSTMENTS

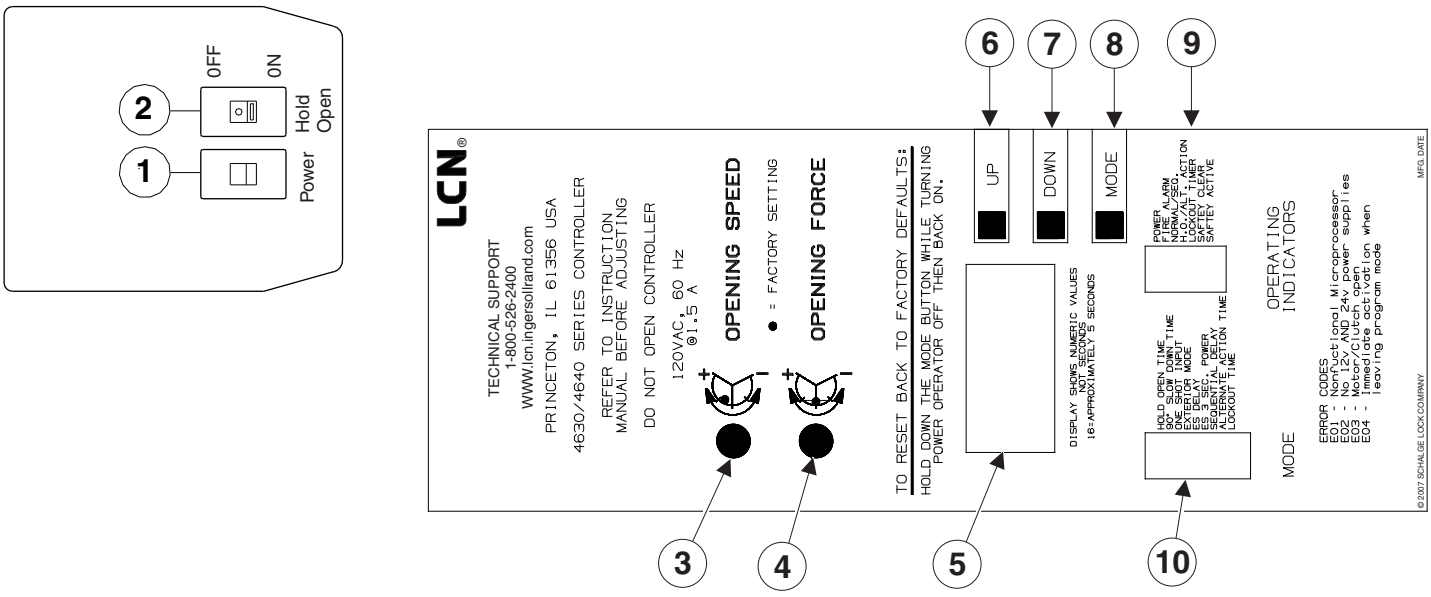

Consult diagram above. Each setting / indicators labeled #1 - #10, which correspond with numbers below. Adjustments for #3 & #4 are made with a small flat blade screwdriver. Turn clockwise to increase speed / force or counterclockwise to decrease speed / force. Controller functions are preset before shipment. **Adjustments should be made only if necessary.** Factory pre-set positions are shown on controller label.

1. **ON/OFF SWITCH** - Allows operator to be turned on & off without disconnecting power.
2. **HOLD OPEN SWITCH** - Provides option to keep door in hold open position (fire signal will override).
3. **OPENING SPEED** - Adjusts opening speed of door. Opening speed must be within ANSI A156.19 specifications (see **TABLE 3** on pg. 18). Large, heavy doors and / or strong door closer backcheck settings may require a slower speed adjustment for proper operation. As a general rule, a slower door speed and use of an auxiliary door stop will provide smoother operation.
4. **OPENING FORCE** - Adjusts amount of force the door exerts when opening (15 lbs. max). Normal adjustment is for door to open 90° or encounter an auxiliary door stop, where motor will stop. If clutch slips more than 1/4 turn when door stops, adjust OPENING FORCE down until there is minimal or no clutch slippage. If OPENING FORCE is increased too much, it may overpower clutch & motor. Motor will stop running after 15 seconds. It will then go into HOLD OPEN DELAY and cycle through the closing sequence.
5. **TIME DISPLAY** - Displays a numeric value relating to the timing adjustment indicated on the mode display. **16 = Approximately 5 Seconds.**
6. **UP BUTTON** - Increases time display number or change from (OFF to ON) when in programming mode.
7. **DOWN BUTTON** - Decreases time display number or change from (ON to OFF) when in programming mode.
8. **MODE BUTTON** - Advances through programming setups indicated on Mode Indicator.
9. **OPERATING INDICATORS** - Displays operating information about internal functions and external hardware.
10. **MODE INDICATION** - When programming, indicates the program mode currently being displayed.

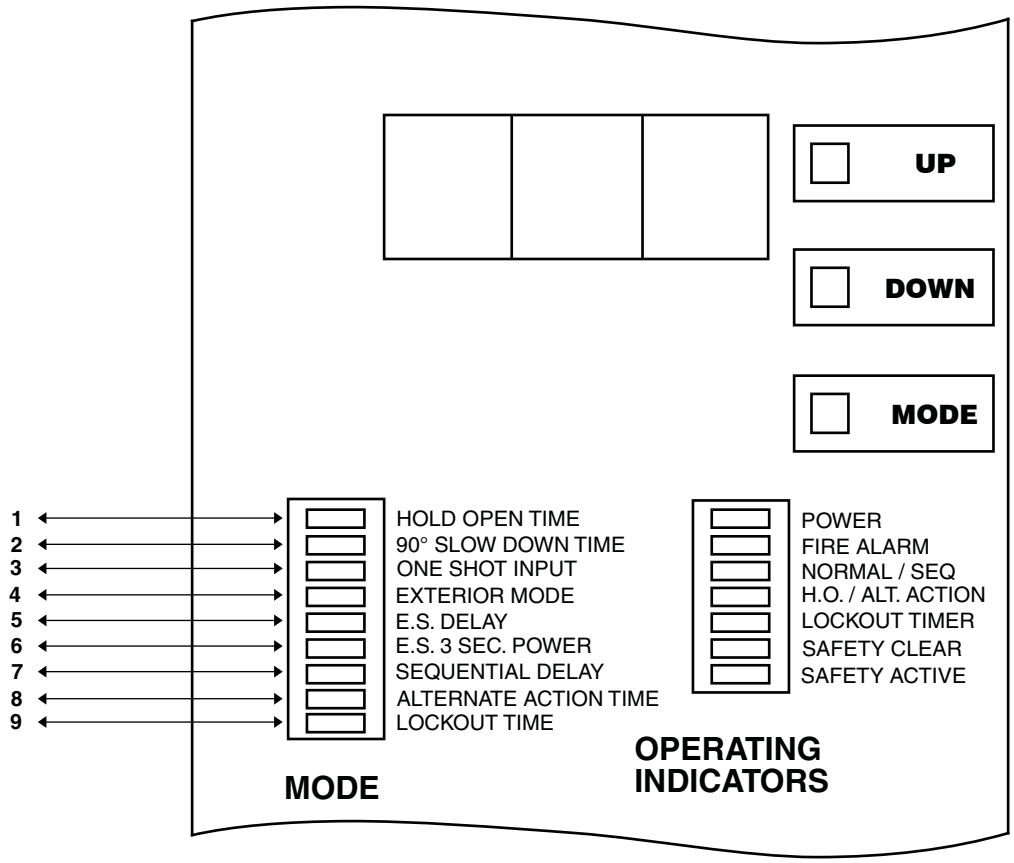

1. **HOLD OPEN TIME:** Adjusts the amount of time door stays open after reaching the 90° position.
2. **90° SLOW DOWN TIME:** The time from start of door movement to a transition at approximately 70°, when door opening speed is reduced.
3. **ONE SHOT INPUT (OFF/ON):** If off, hold open delay starts upon last activation input signal. If on, hold open delay starts upon first activation input signal and ignores all others.
4. **EXTERIOR MODE (OFF/ON):** If off, door stops and hold open timer starts after door encounters first restriction. If on, door will pause for 1 second upon first restriction(wind), then try to open again. Hold open timer starts after door encounters second restriction.
5. **E.S. DELAY:** Controls the time between activation signal and actual door movement. Allows time for electric latching hardware to release before door starts to open. Default time should only be adjusted when using electric latching hardware.
6. **E.S. 3 SECOND POWER (OFF/ON):** If off, E.S. Relay is powered entire time door is open. Releases when door starts to close. If on, E.S Relay is powered for only 3 seconds after door is activated, then releases.
7. **SEQUENTIAL DELAY:** Controls the time from first door activation to second door activation during sequential door application. Should only be adjusted for sequential door application.
8. **ALTERNATE ACTION TIME:** Controls the time the door will remain open after an alternate action input is received. Provides an automatic second input to close the door if a second alternate action input is not received within the preset time. Should only be set if using alternate action door application.
9. **LOCKOUT TIME:** Controls the time that a safety scanner input is ignored during door closing. Should only be set if safety scanners are used.

CONTROLLER PROGRAMMING

Apply power to operator after all components are installed. Controller will perform a self diagnostics and Display will show an Error Code if error is present. If no error is present, operator will be in RUN Mode (“POWER” Operating Indicator Light “ON”) and the Display will be blank.

Normal Operating Mode = Power and Safety Clear indicators on controller lit.

ERROR CODES:

E01 = Non-functional Microprocessor

E02 = No 12V and 24V power supplies

E03 = Motor / Clutch not plugged in or open coil. Resistance values (Clutch 1200 ohms) (Motor 40 to 70 ohms)

E04 = Continuous activation signal upon power up or when leaving programming mode.

If (H.O./ALT. Action) indicator on controller is lit, check hold open switch on end cap. Must be off.

If (NORMAL/SEQ.) indicator on controller is lit, check for mis wired or stuck actuator switch.

Must be N.O. Contacts.

To enter programming mode, press **MODE** button.

HOLD OPEN TIME indicator will be lit and display will show programmed time. To change time, press UP or DOWN button respectively. Adjustment 0 to 999. Default 16. Must be at least 5 seconds of hold open time. To continue programming mode, press mode button.

90° SLOW DOWNTIME indicator will be lit and display will show programmed time. To change time, press UP or Down button respectively. Adjustment 0 to 26. Default 9. To continue programming mode, press mode button.

ONE SHOT INPUT indicator will be lit and display will show programmed state. To change state, press UP or DOWN button respectively. Adjustment ON/OFF. Default OFF. To continue programming mode, press mode button.

EXTERIOR MODE indicator will be lit and display will show programmed state. To change state, press UP or DOWN button respectively. Adjustment ON/OFF. Default ON. To continue programming mode, press mode button.

E.S. DELAY indicator will be lit and display will show programmed time. To change time, press UP or DOWN button respectively. Adjustment 0 to 16. Default 0. To continue programming mode, press mode button.

E.S. 3 SECOND POWER indicator will be lit and display will show programmed state. To change state, press UP or DOWN button respectively. Adjustment ON/OFF. Default ON. To continue programming mode, press mode button.

SEQUENTIAL DELAY indicator will be lit and display will show programmed time. To change time, press UP or DOWN button respectively. Adjustment 0 to 100. Default 0. To continue programming mode, press mode button.

ALTERNATE ACTION TIME indicator will be lit and display will show programmed time. To change time, press UP or DOWN button respectively. Adjustment 0 to 3. Default 0 = No Time Out, 1 = 10 Minute Time Out, 2 = 20 Minute Time Out, 3 = 30 Minute Time Out. To continue programming mode, press mode button.

LOCKOUT TIME indicator will be lit and display will show programmed time. To change time, press UP or DOWN button respectively. Adjustment 0 to 66. Default 20. To exit programming mode, press mode button to return to RUN mode (display blank). Programming is now complete. Activate operator to check that all function and timings are correct. Setting can be changed at any time by pressing Mode Button to scroll to the desired Program Mode.

Note: Controller will automatically exit Programming Mode and return to run Mode after 15 seconds with no input from MODE, UP or DOWN buttons.

TO RESET BACKTO FACTORY DEFAULTS: HOLD DOWNTHE MODE BUTTON WHILE TURNING POWER TO OPERATOR “OFF” THEN BACK “ON” USING THE ON/OFF SWITCH ON OPERATOR END CAP.

TABLE 3 (below) lists the maximum door opening speeds specified by ANSI 156.19 for Low - Energy Door Operators. 4630/4640 max. opening speed to 90° is 5 seconds. If weight of door is unknown, use **TABLE 4** to determine approximate door weight.

TABLE 3

MAXIMUM DOOR WEIGHT IN POUNDS	FASTEST OPENING TIME 0° to 80°		
	DOOR WIDTH IN INCHES		
	36"	42"	48"
100 lbs.	3.0 sec	3.5 sec	4.0 sec
125 lbs.	3.5 sec	4.0 sec	4.5 sec
150 lbs.	3.5 sec	4.0 sec	4.5 sec
200 lbs.	4.0 sec	4.5 sec	5.5 sec

TABLE 4

TYPE OF DOOR	WEIGHT PER SQ. FT.	TYPICAL 3'0" X 7'0" DOOR WEIGHT
- Solid Core Wood - 20 Ga. Flush Hollow Metal - Aluminum x 1/4" Glass	**5.5 lbs**	**115 lbs**
- Mineral Core Door - 16 Ga. Flush Hollow Metal - Aluminum x 1" Glass	**7.0 lbs**	**147 lbs**

BASIC OPERATION INFORMATION

Note: If fire alarm contacts are activated at any time during the opening cycle or while in hold open, the 4600 series Door Operator will override any function and close the door immediately. All power door functions are stopped until the fire alarm contacts are deactivated.

When triggered by actuator switch:

1. Controller checks for optional swing-side safety sensor input. If activated, opening cycle is aborted.
   a. If sequential actuator inputs are used then the A-B SEQUENTIAL DELAY timer is started.
   b. Auxiliary and E.S. Relay contacts are triggered.
2. Opening cycle starts after ELECTRIC STRIKE DELAY times out.
3. Motor & clutch are activated.
   a. If sequential actuator inputs are used then the A-B SEQUENTIAL DELAY output will signal the next operator.
4. Controller monitors the motor during opening cycle for door obstructions that exceed the present OPENING FORCE setting. If an obstruction is encountered controller will pause opening cycle for one second, then attempt to open door again (SECOND CHANCE feature).
   a. Opening cycle resumes until power opening range is reached or a second obstruction is sensed.
   b. Opening door encounters BACKCHECK range of door closer. A strong BACKCHECK setting will cause controller to act as though it hit an obstruction, triggering the SECOND CHANCE feature. Some experimentation with OPENING FORCE, OPENING SPEED & BACKCHECK settings may be necessary for applications where wind and/ or air pressure problems occur.
   c. Controller goes into HOLD OPEN DELAY mode for preset amount of time.
   d. The controller will maintain the hold open mode as long as an actuator input signal is present. The HOLD OPEN DELAY mode timer is reset with each additional actuator input signal. With each additional sequential actuator input a sequential output signal is sent.
5. Controller checks for optional push-side safety sensor input. If activated, the operator will hold door open until sensor de-activates.
   a. Controller releases door for closing cycle. Closing cycle is controlled by door closer assembly.

COVER INSTALLATION

1. Depending on conduit option used and hand of door, remove proper knock - outs from operator cover. NOTE: If concealed conduit option is being used, do not remove conduit knock - outs.
2. Align cover with operator and guide into position as shown here in **Fig. 14**. Attach cover to the operator using (2) painted # 8 - 32 x 3/8" flat head machine screws, as shown.

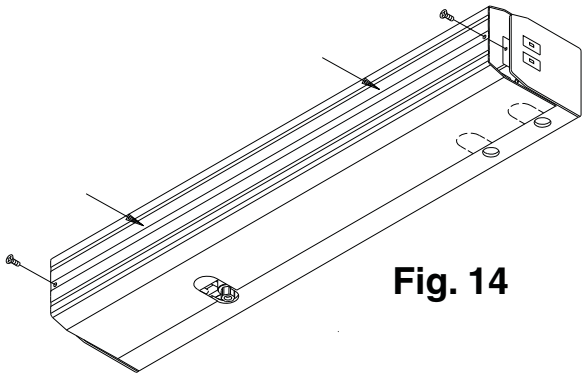

Fig. 14

4630/4640 REPLACEMENT PARTS LIST INFORMATION

When ordering replacement parts remember to specify Model (4640 or 4630) in front on the desired part #. Also specify Color / Finish when required.

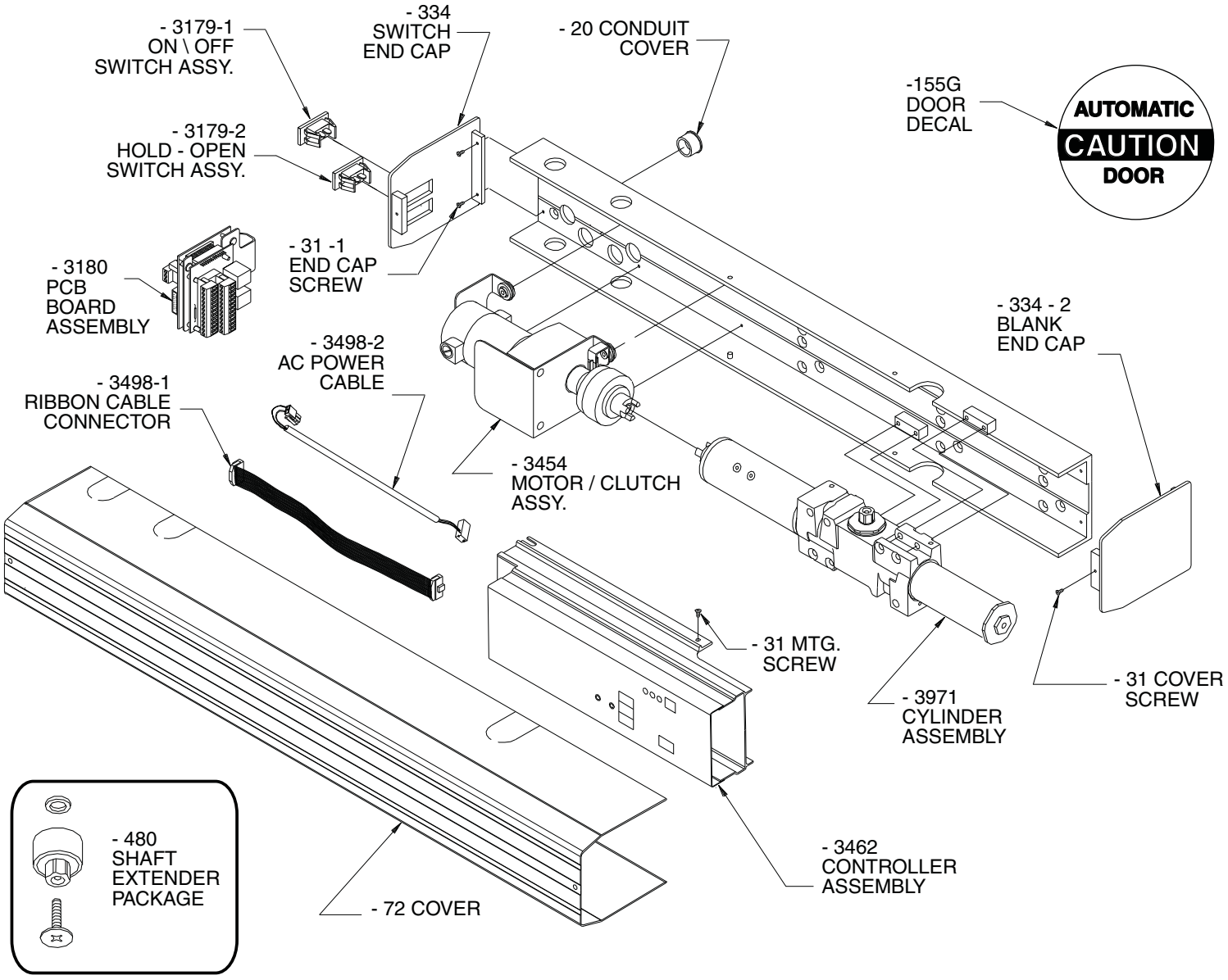

4631 ARM PARTS

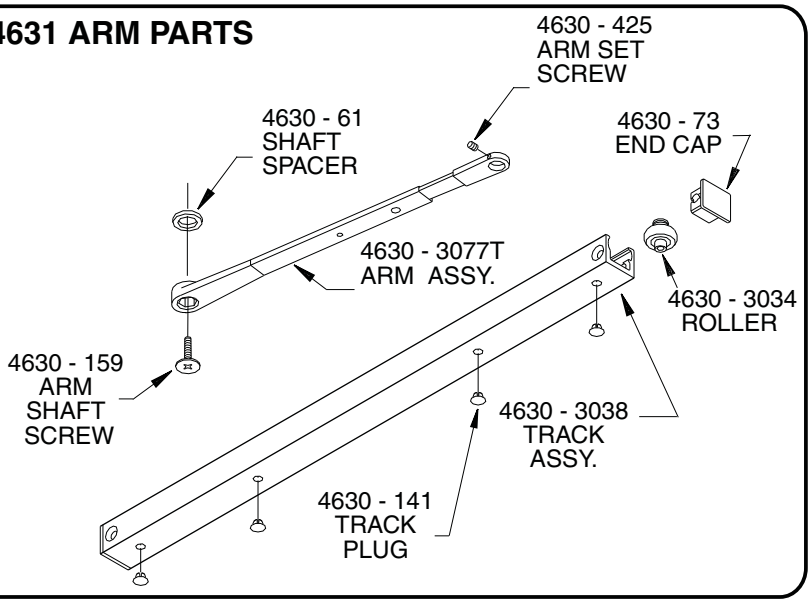

4642 ARM PARTS

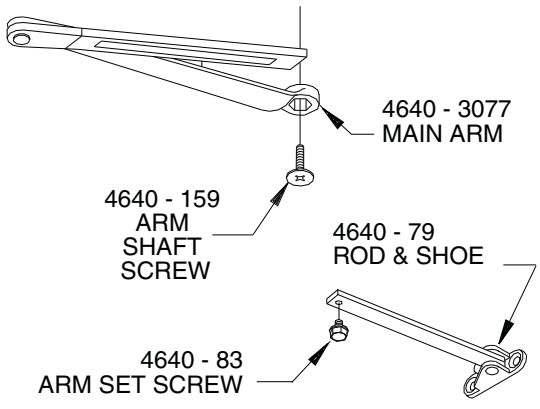



© Allegion 2014
Printed in U.S.A.
28101 Rev. 01/14-p

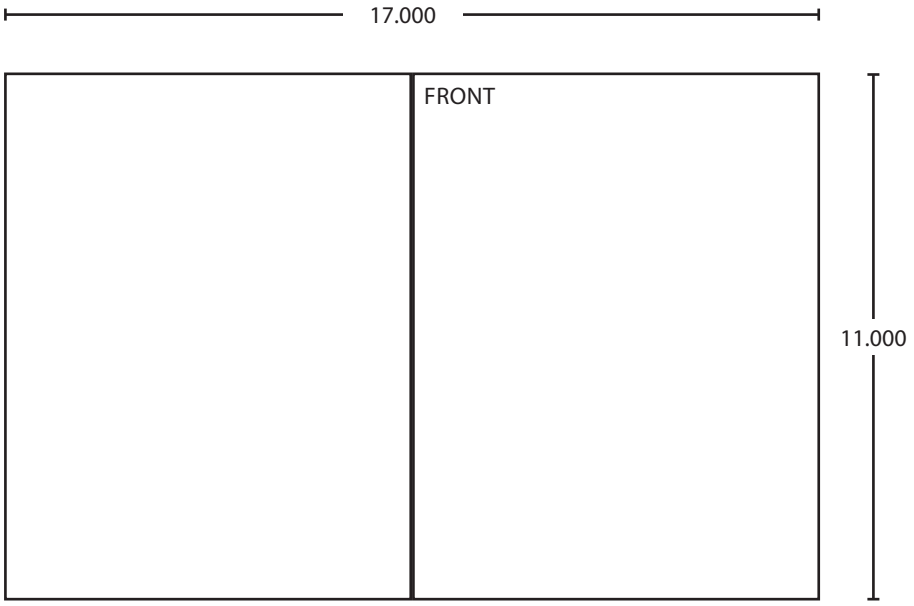

BEGINNING SHEET

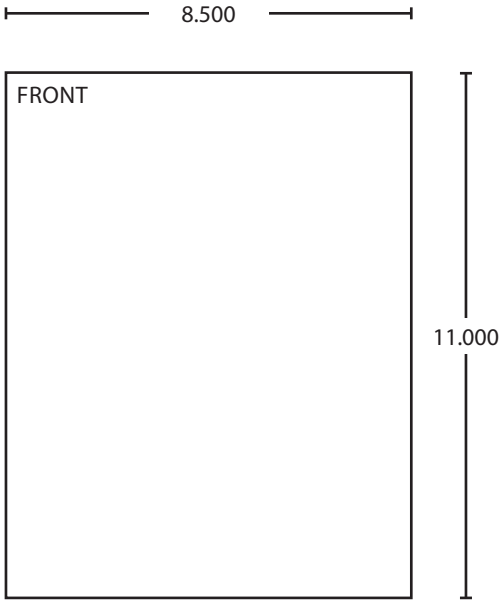

BEGINNING SHEET

Additional Notes:
1. None

Revision History					
J	K	L	M	N	P
N/A	N/A	N/A	N/A	N/A	043812

Material
White Paper

Notes
1. printed two sides
2. printed black
3. tolerance ± .13
4. printed in country may vary
5. drawings not to scale
6. printed saddle-stitch booklet

Revision Description:
P > Revised artwork

Edited By	Approved By	EC Number	Release Date
R. Byun	M. Sasso	043812	01-01-14

Title
4630/4640 Series Instruction Manual

Creation Date	Number	Revision
04-27-10	28101	P

Created By
N/A

Software: InDesign CS6

Activity
3899 Hancock Expwy
Security, CO 80911

© Allegion 2014