18781

3130SE

LCN®

Installation Instructions

Not for installation on UL rated 20 minute wood core doors per CAN/ULC-S104-10.

Installation

1. Closer is handed at factory and must match hand of door. Hand of closer shown on mounting channel.
2. Voltage shown on Sentronic cover plate must match voltage supplied to door frame (24V or 120V).
3. If door and frame are not prepared for closer and track then prepare in accordance with template on opposite side.
4. Remove cover plate from track. Assemble flexible conduit connector to tapped hole provided in top of track. Connect power supply wires to track terminal strip. See wiring diagram below. Insert track into frame and secure with proper screws as shown on opposite side. Replace cover plate, aligning hole with switch.
5. Insert closer into cut-out in door and secure with proper screws.
6. Place arm on closer shaft and secure with arm screw.
7. Loosen set screw in end of arm, open door part way(about 30°), pull arm away from top of door and connect to track roller. Tighten set screw firmly. Open door to hold open position.
8. To place door in desired hold open position, remove arm screw in adjustable arm and re-insert arm screw at new location and tighten.

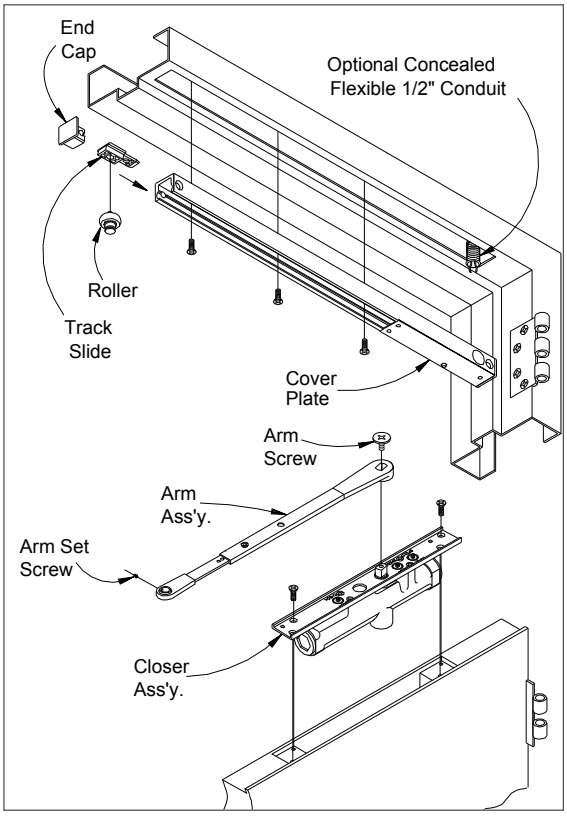

⚠ CAUTION ⚠

Improper installation or regulation may result in personal injury or property damage. Follow all instructions carefully. For questions, contact LCN Closers at: 877-671-7011

Customer Service

1-877-671-7011 www.allegion.com/us

Regulation

IMPORTANT: The 3130 SE door closer is regulated prior to shipment. If adjustments are necessary, use a 3/32" hex wrench to adjust speed. To slow **MAIN SPEED** of door turn **MAIN SPEED** screw clockwise. To slow **LATCH SPEED** of door turn **LATCH SPEED** screw clockwise. To increase **BACKCHECK** turn **BACKCHECK** screw clockwise. Use lightest **BACKCHECK** that will retard door opening sufficiently. Do not use an **ABRUPT BACKCHECK**, nor expect door closer to act as a door stop.

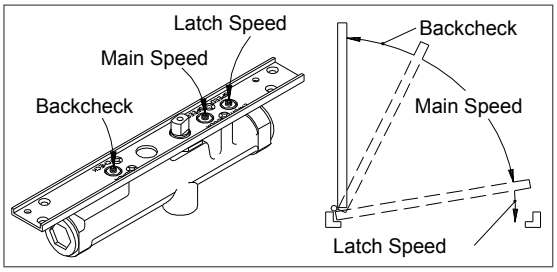

Electrical Checkout

1. With power on, open door completely. Door should remain in open position. if door does not stay open check electrical input.
2. Push release test switch. Door should close immediately. Open the door to hold-open position and let it remain there.
3. System should be checked at frequent intervals It is suggested that step 2 be repeated every 90 days.

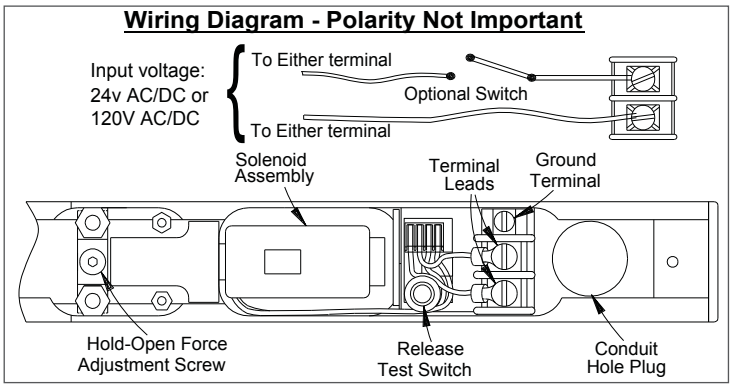

Hold Open Force Adjustment

Locate hold-open adjustment screw in diagram above. For greater hold open force, insert socket screw key wrench (included in screwpack) and turn clockwise. To decrease amount of hold open force, turn screw counter-clockwise. Maximum of 4 turns.

⚠ WARNING ⚠

HAZARDOUS VOLTAGE CAN SHOCK AND CAUSE SEVERE INJURY
Disconnect power before making any electrical connections or performing maintenance.

ALLEGION

© Allegion 2014
Printed in U.S.A.
18781 Rev. 01/14-f

3130 SE } 85° to 110° HOLD OPEN
AUXILIARY STOP RECOMMENDED
LEFT HAND DOOR AND CLOSER SHOWN, RIGHT HAND OPPOSITE — 8/95

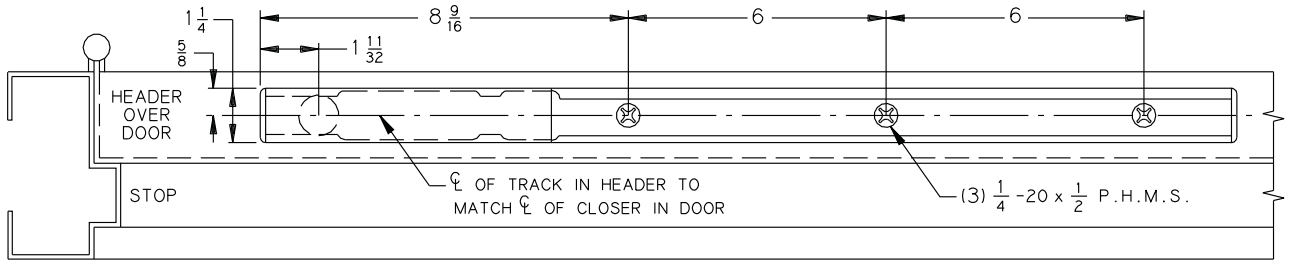

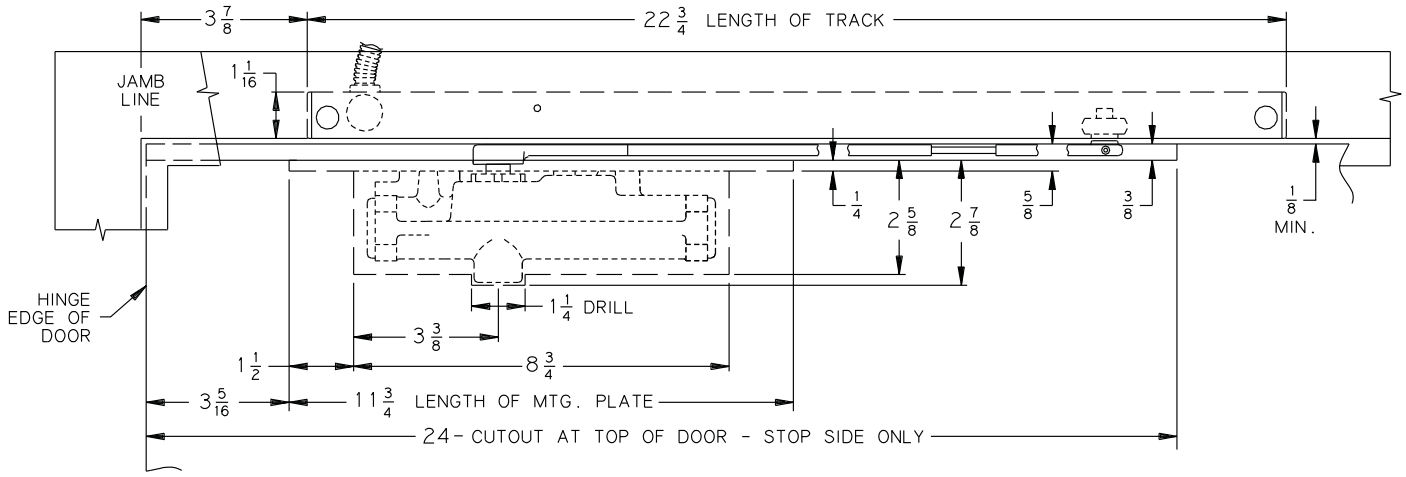

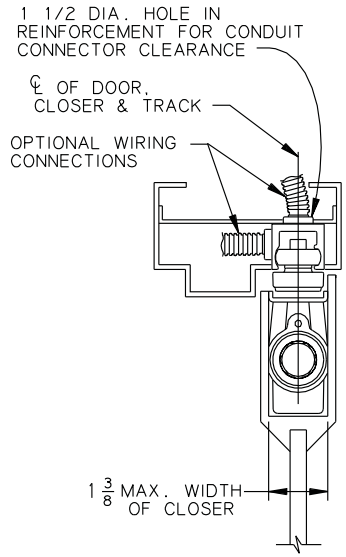

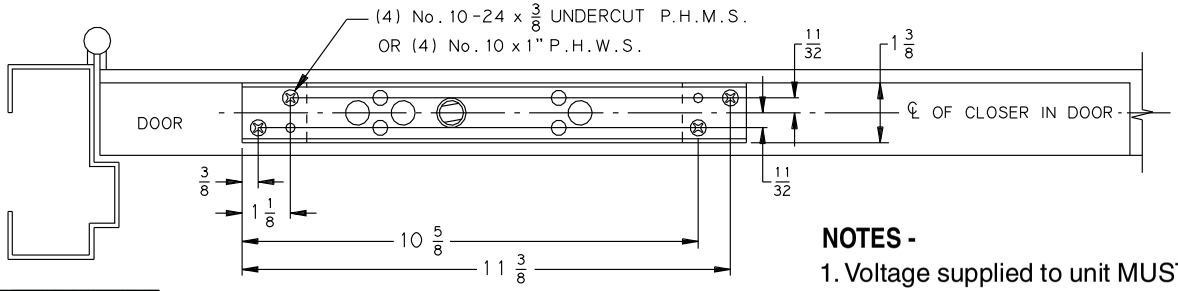

DOOR HOLDER SOLENOID DATA
24 VAC - DC Nominal +10% - 15% @ .090 Amp. Max.
120 VAC - DC Nominal +10% - 15% @ .030 Amp. Max.
For 12V wiring consult factory.

NOTES -

1. Voltage supplied to unit MUST match voltage shown on Sentronic® label.
2. If door is hung on pivots or swing clear hinges consult factory.
3. Floor or wall stops must be used.
4. Reinforcing per ANSI\SDI-100 is recommended for hollow metal doors and frames.

⚠ WARNING



HAZARDOUS VOLTAGE CAN SHOCK AND CAUSE SEVERE INJURY

Disconnect power before making any electrical connections or performing maintenance.

INCH	1/8	1/4	11/32	3/8	1/2	5/8	11/16	3/4	1	1 1/16	1 1/8	1 1/4	1 11/32	1 3/8
M.M.	3	6	9	10	13	16	18	19	25	27	29	32	34	35
INCH	1 1/2	2 5/8	2 7/8	3 5/16	3 3/8	3 7/8	6	8 9/16	8 3/4	10 5/8	11 3/8	11 3/4	22 3/4	24
M.M.	38	67	73	84	86	98	152	217	222	270	289	298	578	610

No.	REVISION	BY	DATE
1	UPDATE CHART	AMM	03/98

LCN®

DRW BY CTB 5/94

DO NOT SCALE

3130 SE CONCEALED CLOSER \ HOLDER WITH ELECTRONIC RELEASE

3130 SE CONCEALED MOUNTING

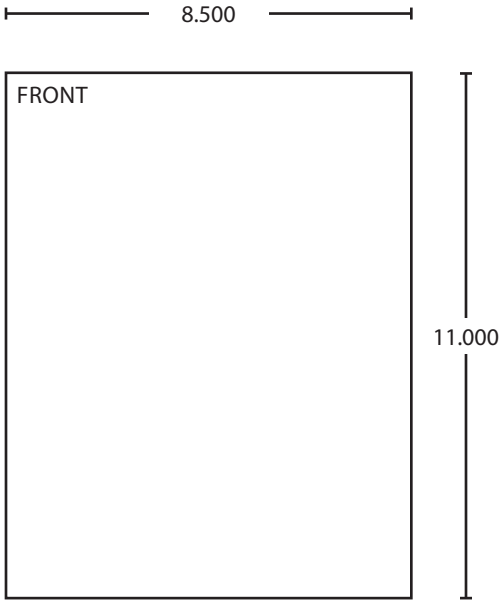

BEGINNING SHEET

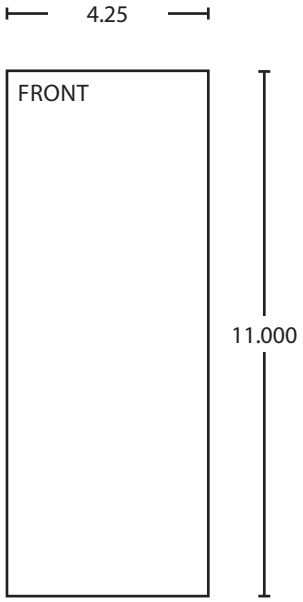

FOLDED SHEET

Additional Notes:
1. None

Revision History					
A	B	C	D	E	F
N/A	N/A	N/A	N/A	N/A	043228

Material
White Paper

Notes
1. printed two sides
2. printed black
3. tolerance ± .13
4. printed in country may vary
5. drawings not to scale

Revision Description:
F > Revised artwork

Edited By	Approved By	EC Number	Release Date
D. Myers	M. Sasso	043228	01-01-14

Title
3130SE Series Instruction Sheet

Creation Date	Number	Revision
05-10-10	18781	F

Created By
N/A

Software: InDesign CS6

Activity
3899 Hancock Expwy
Security, CO 80911

© Allegion 2014