INSTALLATION 9325

Access Keypad

RUTHERFORD CONTROLS
A DORMA Group Company

In or Out... we make it Easy!®

Quickstart Exterior - 9325e

1. Connect the black pair of wires to a 12VDC supply. Observe proper polarity see Fig.1
2. The white pair of wires provide connection to a field selectable N/O or N/C SPST relay (see Fig. 1).
3. The gray pair of wires may be connected to a normally open switch (for example: a N/O pushbutton switch) to operate the electric release from the secure side of the door.

Fig. 1
9325e wiring connections

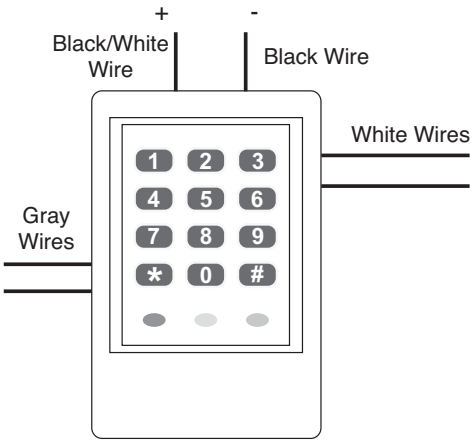

Fig. 2
9325i wiring connections

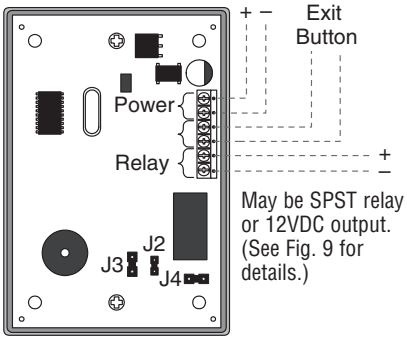

Quickstart Interior - 9325i

1. Connect a 12VDC supply to the power terminals of the keypad. Observe proper polarity as illustrated in Fig.2
2. Connect the device to be controlled by the keypad to the relay terminals of the keypad. These terminals can operate as a N/O or N/C relay or a 12VDC powered output. See connection diagram in Fig. 2. The Relay terminals operate as a SPST relay by default, if a 12VDC powered output is desired see Fig. 9 for details.
3. Connect a N/O pushbutton to the Exit button terminals if desired. A button wired to these terminals may be used to operate an electric release from a remote location.

Quickstart Programming

First – the master code must be set (allows access to all keypad settings).
The first time the keypad is turned on, the green and red LEDs will flash alternately.
Choose a 6 digit number and make a note of it here. This will be the new master code.

master code

Press ***** followed by the new master code then...
Press ***** and re-enter the new master code then...
Press ***** to confirm the code, and finish.
Now that the master code is defined, type 7890 on the keypad. The door should open.
Note: The master code must not contain a user code (for example: 123456 as a master code and 1234 as a user code would cause the door to open before the master code had been entered. A full system reset would be required).

Then set the user code (opens the door).
Choose an entry code (at least 4 digits, but not more than 8) and make a note of it here. This will be the new user entry code.

user code

Enter the 6 digit master code (green and red start flashing together).
Press and hold down **8** for 3 seconds then...
Enter the new user entry code and press ***** then...
Re-enter the new user entry code and press ***** then...
Press **1** to confirm the code.
Press **#** to exit programming mode.

Resetting
If you want to start again, simply turn off the power to the keypad. Press and hold the **3 (or 2)** while turning the power back on. This will reset everything back to the factory settings.

Multiple codes
For more than one user code, see page 3 programming that allows the keypad to accept multiple user codes.
The factory default user code 7890 should be deleted once the new multi-codes have been entered.
In multi-user mode, a **[*]** is required after the user code to unlock the door.(for example, **1234***).

© 2014 RUTHERFORD CONTROLS INT'L | A DORMA GROUP COMPANY
WWW.RUTHERFORDCONTROLS.COM • PHONE: 1.800.265.6630 • FAX: 1.800.482.9795 • E-MAIL: SALES@RUTHERFORDCONTROLS.COM
PCN14014
R07/14TG-1

9325i Interior Keypad

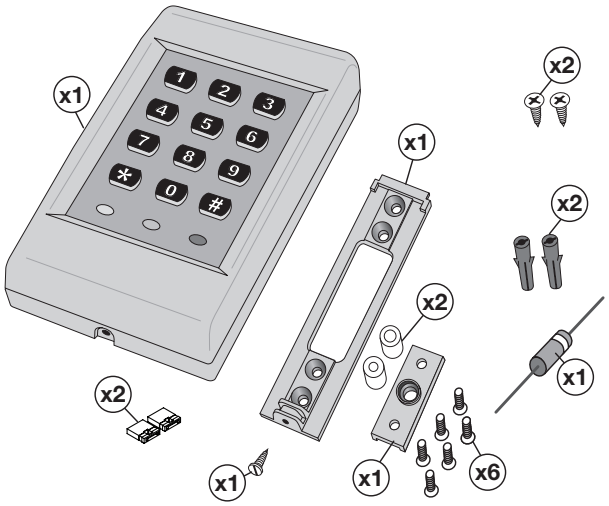

Fig. 3 Items Supplied with 9325i. If any items are missing or damaged, please contact your vendor.

9325e Weatherproof or Exterior Keypad

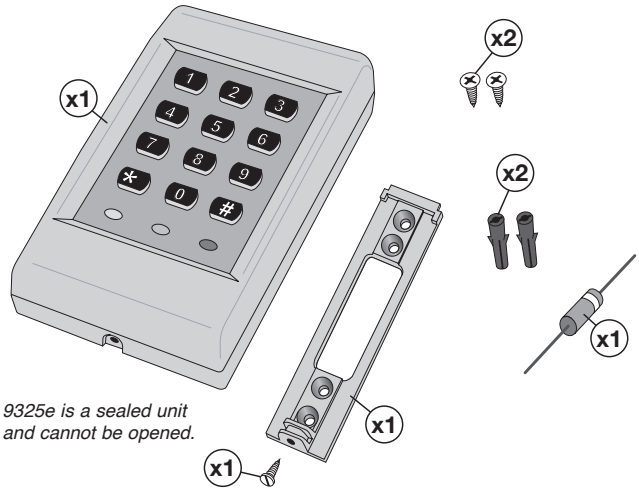

Fig. 4 Items Supplied with 9325e. If any items are missing or damaged, please contact your vendor.

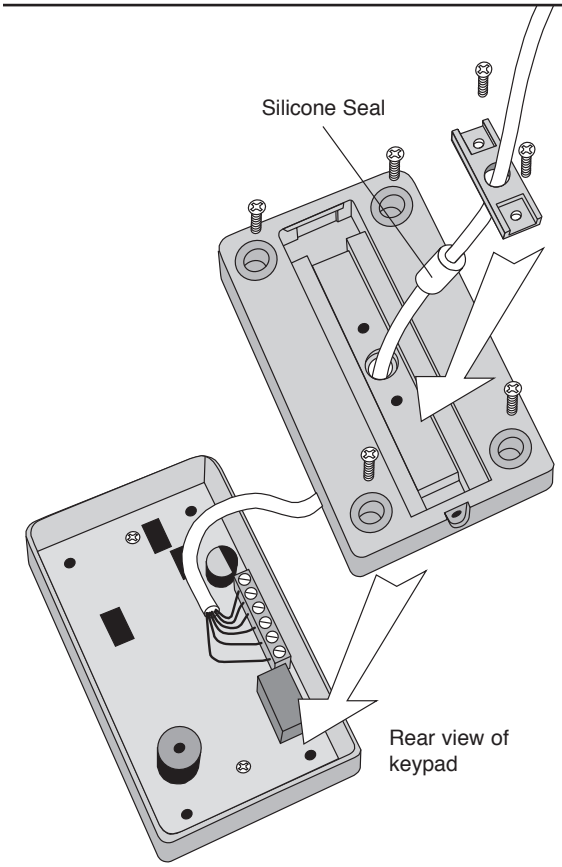

Fig. 5 Assembling the 9325i Keypad. The cable should be connected as described in the instructions on page 1. **A choice of silicone seal is provided depending on the diameter of the cable used.** The cable clamp is screwed down to hold the cable firmly at the back of the keypad.

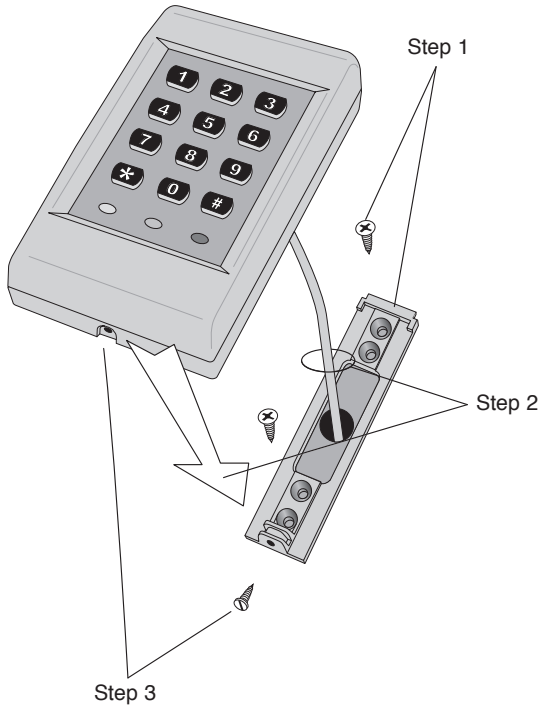

Fig. 6 Marking Out Mounting Position. The supplied bracket allows easy marking out before drilling and mounting the keypad. Drill the cable clearance hole in the center of the rectangular aperture. (All screws and wall plugs are supplied.) You will need a No.2 Philips head screwdriver, a drill and a pencil.

© 2014 RUTHERFORD CONTROLS INT'L | A DORMA GROUP COMPANY
WWW.RUTHERFORDCONTROLS.COM • PHONE: 1.800.265.6630 • FAX: 1.800.482.9795 • E-MAIL: SALES@RUTHERFORDCONTROLS.COM

Programming Codes

For basic operation, see the Quickstart guide on page 1.
Programming additional features in the keypad are shown below.

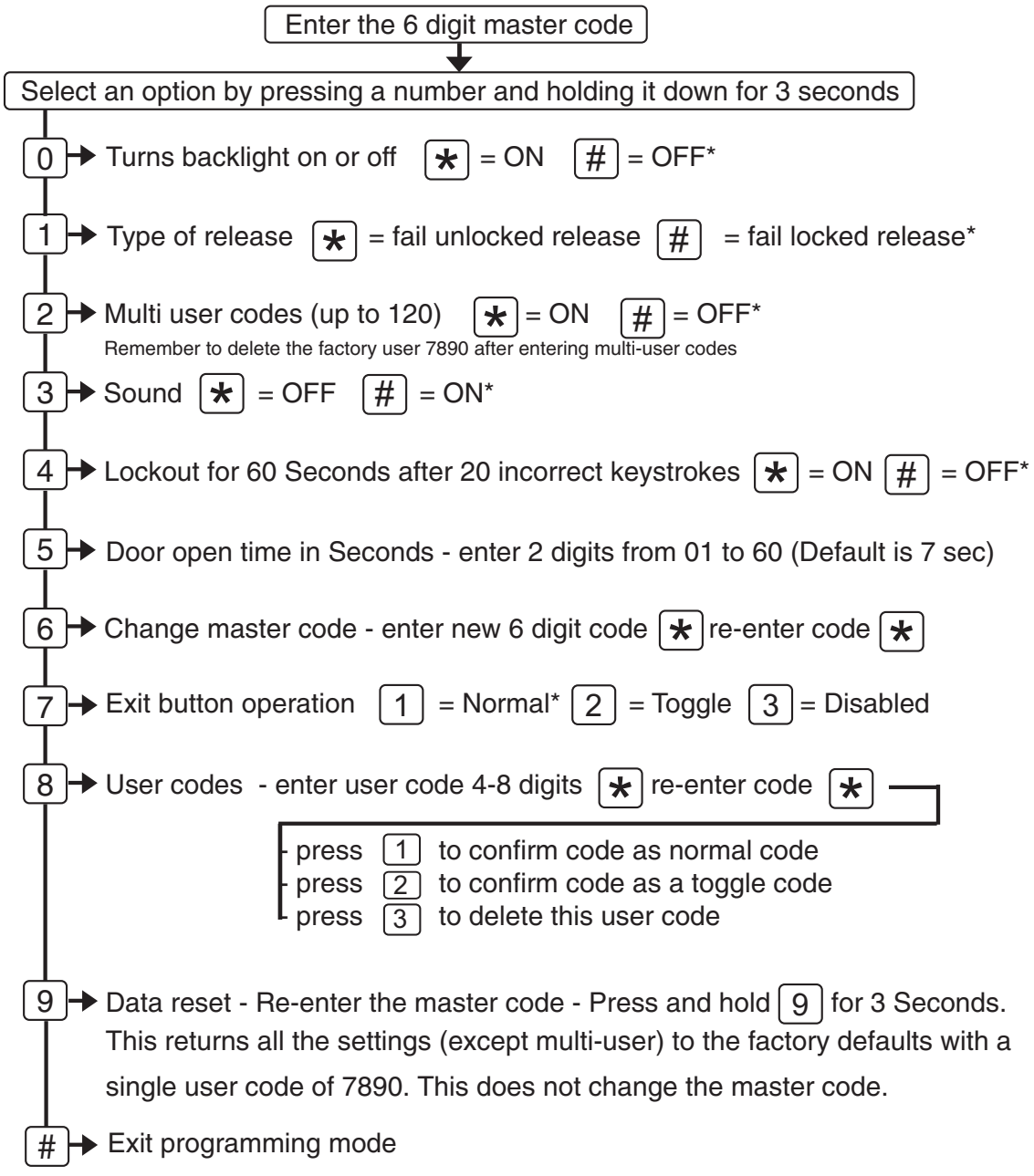

* = Factory defaults

© 2014 RUTHERFORD CONTROLS INT'L | A DORMA GROUP COMPANY
WWW.RUTHERFORDCONTROLS.COM • PHONE: 1.800.265.6630 • FAX: 1.800.482.9795 • E-MAIL: SALES@RUTHERFORDCONTROLS.COM

Programming Descriptions

How to change the master code
Find out the existing 6 digit master code. (If you do not know this, see if it is written in the Quickstart section of this manual.) The master code is used to change all the keypad settings. To change the master code, enter the old master code then press and hold [**6**] for 3 seconds. Enter your new choice of 6 digit master code and press [*] re-enter the new code and press [*]. Write this code in a safe place, such as the blank space provided on page 1 in this manual.

How to enter or delete a user code
Enter the 6 digit master code. Press and hold [**8**] for 3 seconds. Enter a new user code of 4-8 digits and press [*] re-enter the new user code and press [*]. Now:

- confirm it as a new user code by pressing [**1**] (recommended).
- confirm it as a new toggle user code by pressing [**2**], or
- delete the user code just entered by pressing [**3**].

Hints for changing a user code:
Deleting the code (option 3) is only useful with more than one user code – an employee's code can be removed if they leave, but those remaining are unaffected.
A toggle code is chosen (option 2) when the effect of that code being entered should be to keep the door open until that code is entered again.

How to change the length of time the door stays unlocked
Enter the 6 digit master code. Press and hold [**5**] for 3 seconds. Enter the time in seconds that you want the door to stay open for. Examples: for 6 seconds enter [**0**][**6**] or for 30 seconds enter [**3**][**0**].

How to stop the keypad beeping
Enter the 6 digit master code. Press and hold [**3**] for 3 seconds. Press [*] to turn off all sounds or [**#**] to turn the sounds back on.

How to turn the backlight on or off
Enter the 6 digit master code. Press and hold [**0**] for 3 seconds. Press [*] to turn the backlight on or [**#**] to turn it off.

How to set up the keypad to have more than 1 user code
Enter the 6 digit master code. Press and hold [**2**] for 3 seconds. Press [*] to enable multiple user codes or [**#**] to use just 1 user code. Multiple users must enter their code, **followed by the star key** [*]. Keep careful records of users and codes. Up to 120 user codes may be stored, but a six digit code is recommended where more than 50 codes will be in use. This will reduce the chance of a lucky guess to an acceptable level.
For additional security, set the lockout option to block the keypad after 20 incorrect keystrokes.
Remember to delete the factory default user code 7890 after entering multi-user codes.

How to set up the keypad to work with a fail unlocked release
A fail unlock release is used where it is necessary for the door to become unlocked in the case of power failure. This is typically done when installing on fire escape doors. Enter the 6 digit master code. Press and hold [**1**] for 3 seconds. Press [*] for a fail unlocked release or [**#**] for a fail locked release.

I have lost the user codes! How to reset all the user codes back to the factory settings
Enter the 6 digit master code. Press and hold [**9**] for 3 seconds, re-enter the master code then press and hold [**9**] for a further 3 seconds. This returns all the settings to the factory defaults with a single user code of **7890**. This does not change the master code.

How to reset everything
This will reset all settings to factory default. Remove power from the keypad. Hold down the [**3**] button and turn the keypad on again. See page 1 for details on how to reconfigure the master code. See p. 5 for default settings.

Features

Silent operation

This feature can be enabled if the sounds from the keypad are unwanted. (For example: if someone sits near a heavily used door).

Multiple user codes

This feature is useful where a larger number of people need access. (For example: a tennis club). If a member leaves, their code can be cancelled without the other members having a new number issued to them.

Lockout

This feature provides a higher level of security. It locks the keypad for 60 seconds if more than 20 incorrect key presses are made in succession. This can be enabled in areas where guessing at codes may occur.

Toggle codes

This feature allows the door to be kept open for an unspecified time. The toggle code is entered to open the door and entered again to lock the door. An example of use would be keeping a store room door open while loading goods into the room.

© 2014 RUTHERFORD CONTROLS INT'L | A DORMA GROUP COMPANY
WWW.RUTHERFORDCONTROLS.COM • PHONE: 1.800.265.6630 • FAX: 1.800.482.9795 • E-MAIL: SALES@RUTHERFORDCONTROLS.COM

Specifications

Relay rating: 5A @ 30V

Power requirements: 12VDC

Current consumption: (typical)
@12VDC
Standby without backlight = 25mA
Standby with backlight = 75mA
Door relay energized with backlight = 100mA

Max current draw: 200mA (excluding electric release)

***If 12VDC output is selected, output is restricted to 1A**

Dimensions: 2-3/4"W x 4-1/2"H x 1-5/32"D
(70 x 115 x 29mm)

Operating temperature: -4°F to 131°F (-20°C to 55°C)

Programmable Features

For information on how to set these features go to the Programming section.

Number of user codes (default = single code)
1-120 – If using more than one code (Multiple Code Mode is selected), user **must** press star button [*****] after entering code

Lockout (default = disabled)
Disables keypad for 60 sec. if 20 wrong keystrokes made in succession

Toggle (default = disabled)
User enters code to unlock the door and again to lock it

Sound (default = ON)
Turns on and off all sounds made by keypad in normal operation (sounder still operates in programming mode)

Door open time (default = 7 seconds)
Can be set between 1 and 60 seconds.

Backlight (default = OFF)
Turns the backlight on or off.

Type of release (default = fail locked)
A fail unlocked release is used when it is necessary for the door to become unlocked in the case of power failure. This is typically done on fire door installations. A fail locked release requires power to unlock the door.

Exit button operation (default = normal)
The exit button connections can be configured to 'normal' (to unlock the door for the period set in the 'door open time' setting), 'toggle' (where the exit button will unlock the door and remain open until the button is pressed again) or 'disabled' (where the button will have no effect).

User codes (default code = 7890)
Up to 120 separate user codes of 4 - 8 digits can be entered. Each code can be set as a normal code, which opens the door for the period set in the 'door open time' setting, or as a toggle user code, which requires the code to be entered both to unlock and to lock the door.

Master code (no default setting)
This is a 6 digit code which must be set by the user the first time the keypad is powered up.

Troubleshooting

I have connected the keypad correctly, but it does not open when I enter my code.
Check that there is power to the keypad by pressing the keys and listening for keypad beeps. If no beeps are heard, check the power supply. Check that the green light flashes when the correct code is entered. If not, the code has not been entered correctly, or may have been incorrectly programmed. Check that the lock is capable of operating with a 12VDC power supply. Check connections.

When I enter my code, I hear a click and the keypad resets. Why does the release not unlock?
This can be caused by incorrect wiring of the output wires or the diode. If a DC lock is used check that a diode is connected across the lock so that the band is nearest the +V connection. This fault may blow a fuse in the power supply. Check for above before replacing the fuse.

The door is always unlocked. Why, and how do I get it to lock again?
If the green light on the keypad is **on constantly**, check the type of lock that is fitted. If it is a fail unlocked type, it requires power applied to its terminals to keep it locked. A fail locked type (more normal) requires power only when it is to be kept open. Reprogram the type of release option [**1**] if incorrect for the type of release fitted. If this option is correct, check all wiring for shorts or bad connections. Check that a diode is fitted to the DC lock and is connected correctly. If not, the keypad may be damaged and will have to be replaced. (Damaged relay contacts are not covered by product warranty).
If the green light on the keypad is **flashing**, switch off the power. Wait for 10 seconds and switch the power on again. If the door is locked and the green light is **on constantly** again, it is likely that a user code is set to operate in toggle mode. If you do not want toggle codes, use option 8 and change the affected user codes from toggle to normal. If after re-applying power, the keypad's green light is **still flashing**, and the door is still open, check the remote button wires. These could either be connected together (shorted) either by faulty wiring or by an incorrect switch or timer connected at the end of the gray wires, or the exit button operation could be set incorrectly. Rectify and re-test.

Everything works, but when the main power fails, I can not get into the door. What should I do?
Choose between a mechanical or an electrical backup. A key operated latch can be fitted. Use the key during power outages. Alternatively, fit a backup power supply. These contain a rechargeable battery which will keep the system working in the event of a power failure. Contact your vendor for details of these products. If all of these checks are satisfied, there may be a product fault. Contact your vendor for further instructions.

© 2014 RUTHERFORD CONTROLS INT'L | A DORMA GROUP COMPANY

WWW.RUTHERFORDCONTROLS.COM • PHONE: 1.800.265.6630 • FAX: 1.800.482.9795 • E-MAIL: SALES@RUTHERFORDCONTROLS.COM

Note: To use the 9325 Keypad with an **electric strike**, the output relay must be programmed as **Fail Locked**. See programming instructions on p.3. For use with an electromagnetic lock, see Figs. 9, 10 and 11.

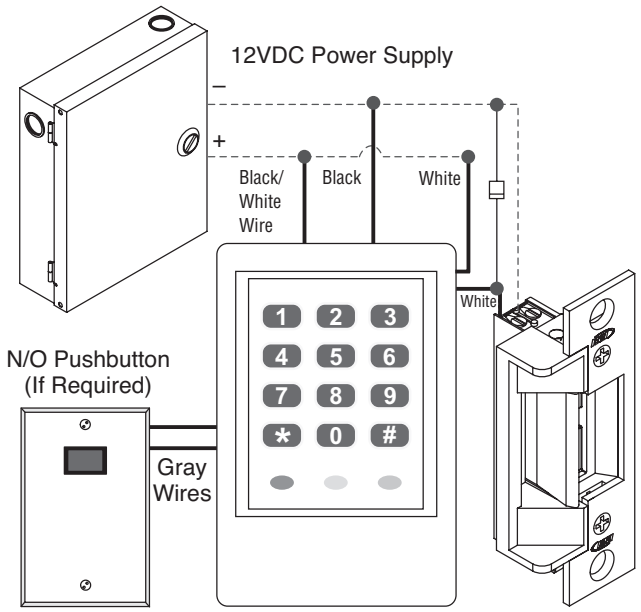

Fig. 7 Typical wiring of a door strike through the **exterior 9325e** relay.

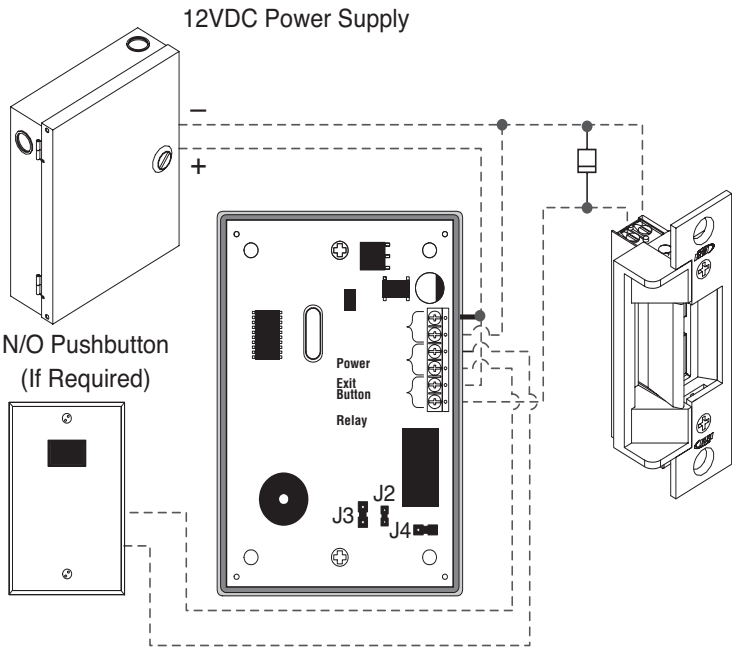

Fig. 8 Typical wiring of a door strike through the **interior 9325i** relay.

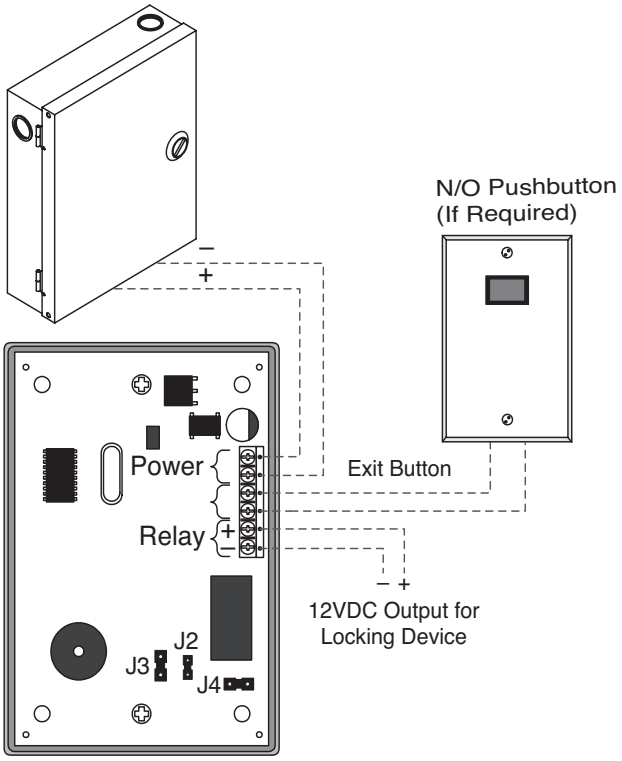

Output Type	J2	J3	J4
Relay	On	Off	Off
12VDC	Off	On	On

The RCI 9325 keypad can be used to directly control an electromagnetic lock or electric door strike by changing the output. Model number 9325i is preset at factory default with output configured as SPST N/O relay. By changing the jumpers on the back of the keypad as shown, the output terminals can be reconfigured to supply 12VDC power directly to the locking device. **Note:** Polarity must be observed.

Important: Remove power to keypad before changing jumper settings. Failure to remove power may cause damage to keypad, voiding warranty.

Fig. 9 Wiring a device/changing the jumpers to operate with the **interior 9325i** keypad.

© 2014 RUTHERFORD CONTROLS INT'L | A DORMA GROUP COMPANY
WWW.RUTHERFORDCONTROLS.COM • PHONE: 1.800.265.6630 • FAX: 1.800.482.9795 • E-MAIL: SALES@RUTHERFORDCONTROLS.COM

Note: To use the 9325 Keypad with an **electromagnetic lock** the output relay must be programmed as **Fail Unlocked**. See programming instructions on p.3. For use with an electric strike, see Figs. 7, and 8 .

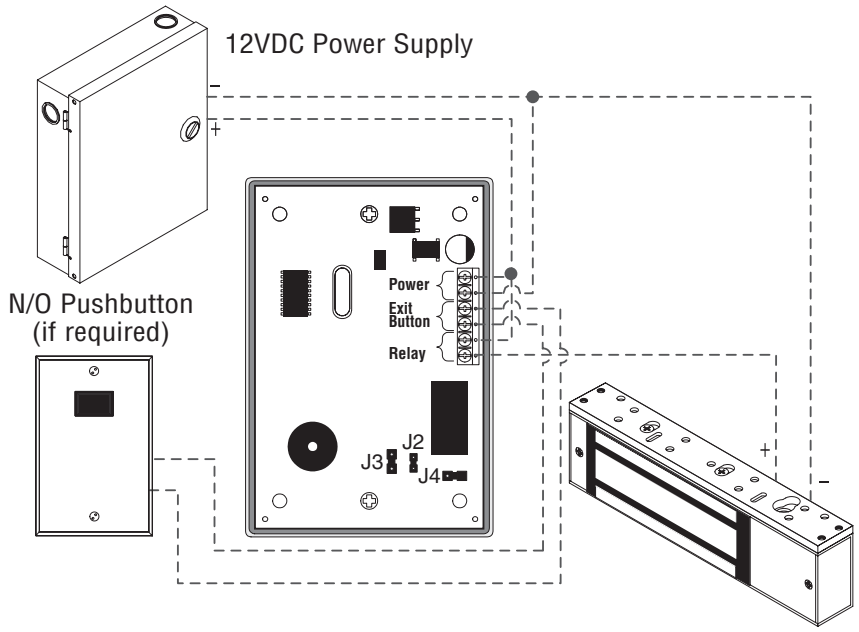

Fig. 10 Typical wiring of an electromagnetic lock through the **interior 9325i** relay.

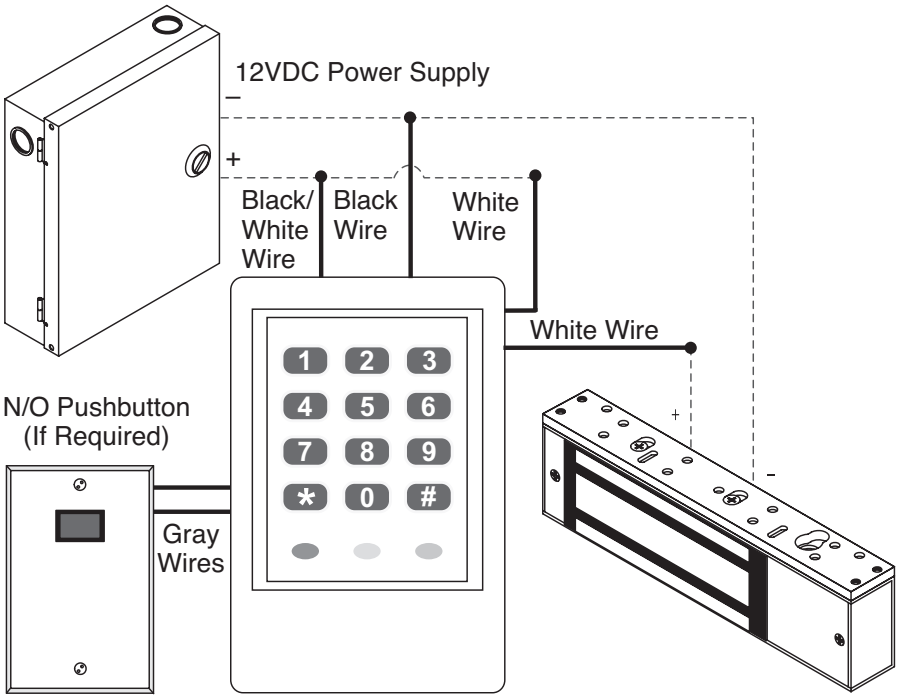

Fig. 11 Typical wiring of an electromagnetic lock through the **exterior 9325e** relay.

© 2014 RUTHERFORD CONTROLS INT'L | A DORMA GROUP COMPANY

REFERENCE CHART WIRE GAUGE SELECTION

RUTHERFORD CONTROLS
A DORMA Group Company

In or Out... we make it Easy!®

Total One Way Length of Wire Run (ft.)	Load Current at 24V							
	1/4A	1/2A	3/4A	1A	1-1/4A	1-1/2A	2A	3A
100	24	20	18	18	16	16	14	12
150	22	18	16	16	14	14	12	10
200	20	18	16	14	14	12	12	10
250	18	16	14	14	12	12	12	10
300	18	16	14	12	12	12	10	--
400	18	14	12	12	10	10	--	--
500	16	14	12	10	10	--	--	--
750	14	12	10	10	--	--	--	--
1000	14	10	10	--	--	--	--	--
1500	12	10	--	--	--	--	--	--

Total One Way Length of Wire Run (ft.)	Load Current at 12V							
	1/4A	1/2A	3/4A	1A	1-1/4A	1-1/2A	2A	3A
100	20	18	16	14	14	12	12	10
150	18	16	14	12	12	12	10	--
200	16	14	12	12	10	10	--	--
250	16	14	12	10	10	10	--	--
300	16	12	12	10	10	--	--	--
400	14	12	10	--	--	--	--	--
500	14	10	10	--	--	--	--	--
750	12	10	--	--	--	--	--	--
1000	10	--	--	--	--	--	--	--
1500	10	--	--	--	--	--	--	--

Wire Gauge Chart courtesy of Electronic Locking Devices by John L. Schum

© 2014 RUTHERFORD CONTROLS INT'L | A DORMA GROUP COMPANY
WWW.RUTHERFORDCONTROLS.COM • PHONE: 1.800.265.6630 • FAX: 1.800.482.9795 • E-MAIL: SALES@RUTHERFORDCONTROLS.COM