RUTHERFORD CONTROLS
A DORMA Group Company

In or Out... we make it Easy!®

Instructions

1. Attach red and black wires to N/O connector on back of switch and tuck inside electrical box.
2. Place foam gasket behind pushbutton and mount to an electrical box with the allen screws (provided).

Features

- Weatherproof self-contained metal housing
- Suitable for most environments
- No moving parts
- Rugged and vandal resistant
- No need for skin contact (gloved hands, elbows, etc.)
- No power required

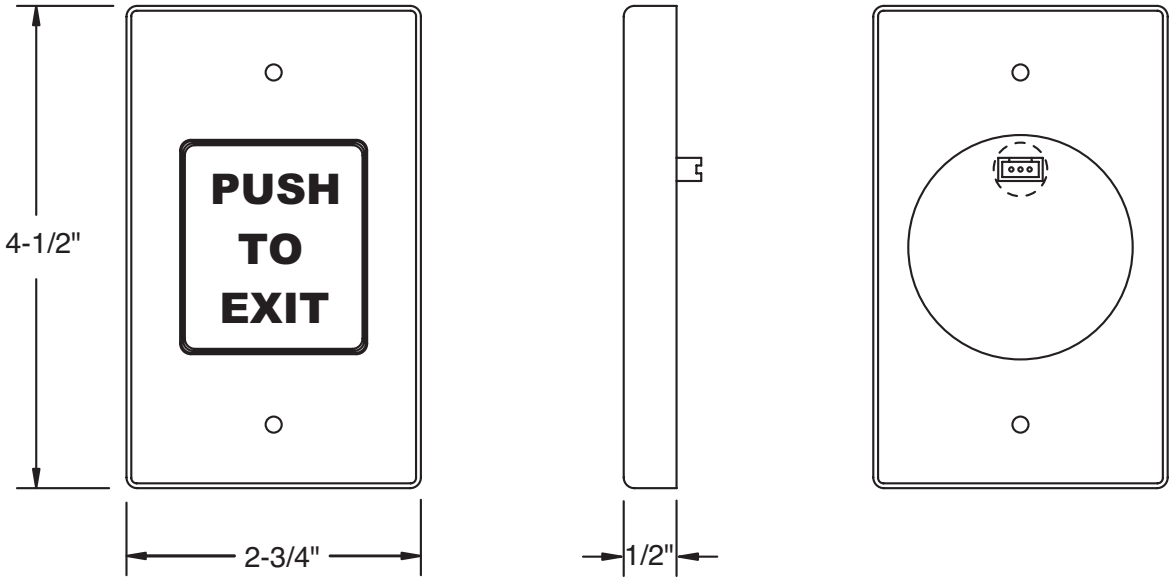

Voltage	Current Rating	Resistance	Closure Duration	Temperature	Switch Life
0-40 VDC	200mA typ; 400 mA max.	ON: < 50 ohms OFF: > 5M ohms	1/4 seconds (typ)*	-20°F to 180°F (limited by label material)	20,000,000 operations

*The 917 request to exit switch gives a typical closure duration of 250 milliseconds. Some access control systems may need to have their request to exit input timing adjusted in order to operate reliably with the 917 exit button.

NOTE: Specifications are subject to change without notice.

© 2014 RUTHERFORD CONTROLS INT'L | A DORMA GROUP COMPANY
WWW.RUTHERFORDCONTROLS.COM • PHONE: 1.800.265.6630 • FAX: 1.800.482.9795 • E-MAIL: SALES@RUTHERFORDCONTROLS.COM

917 Exit Button Installation Instructions (Continued)

917 Auxiliary Relay Wiring Schematic

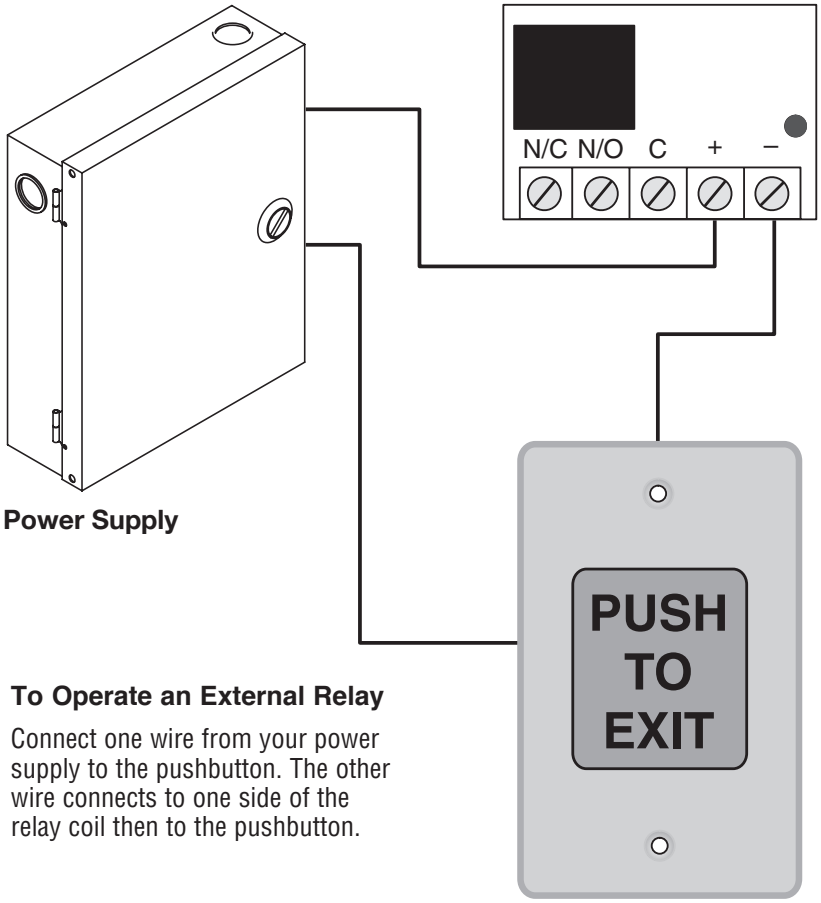

To Operate an External Relay

Connect one wire from your power supply to the pushbutton. The other wire connects to one side of the relay coil then to the pushbutton.

917 Access Control System Wiring (Typical)

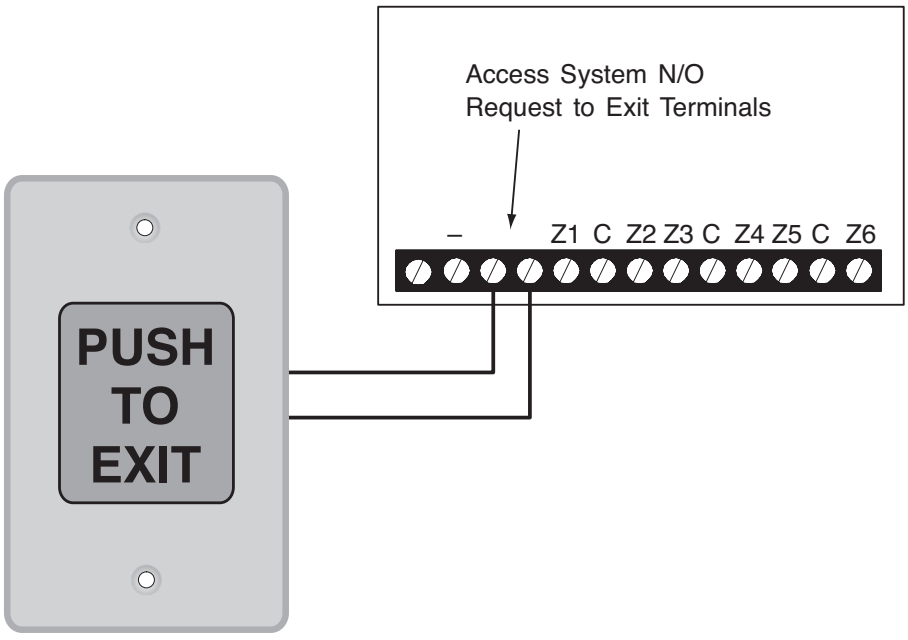

© 2014 RUTHERFORD CONTROLS INT'L | A DORMA GROUP COMPANY
WWW.RUTHERFORDCONTROLS.COM • PHONE: 1.800.265.6630 • FAX: 1.800.482.9795 • E-MAIL: SALES@RUTHERFORDCONTROLS.COM