INSTALLATION

6 Series

Electric Strikes

RUTHERFORD CONTROLS
A DORMA Group Company

In or Out... we make it Easy!®

Instructions

The L65 Low Profile version accepts 1/2" or 5/8" latch projection (perfect for narrow stile aluminum frames). The S65 Standard version is ideal when you require 3/4" latch projection.

1. Determine the vertical centerline of the door lock face and the horizontal centerline of the latch.
   IMPORTANT: When determining the horizontal centerline observe the following:
   FOR MORTISE LOCKS: Align the angled ramps of the lip bracket with the deadlock trigger of the mortise latch.
   FOR CYLINDRICAL LOCKS: Align the center of the latch with the center of the strike opening.**
2. Transfer both the horizontal and vertical centerlines to the doorframe.**
3. Prepare the doorframe for cutting as shown in the appropriate drawing.
4. If required, install the 'no weld' mounting brackets per page 4.
5. Attach the strike faceplate to the lip bracket with the self-tapping screws provided. (It may be desirable to leave these screws slightly loose to facilitate insertion into the doorframe.
6. Connect the incoming wiring from the power supply (see wiring instructions).
7. Install the door strike in the doorframe using the screws provided.

S6504 Aluminum Frames, 1-3/16" Insert Depth
Modular **AS65** with **B604** faceplate

MEASUREMENT	FRACTIONAL INCHES	DECIMAL INCHES	METRIC mm
A	1-1/4	1.250	31.75
B	4-7/8	4.875	123.83
C	3-3/8	3.375	85.73
D	1-3/16	1.188	30.16
E	3/8	.375	9.53
F	1/8*	.125*	3.18*
G	1-11/16	1.688	42.86
X	Vertical Centerline of Door**		
R	5/32	0.156	3.97
K	4-1/8	4.125	104.78
M	12-24	—	—

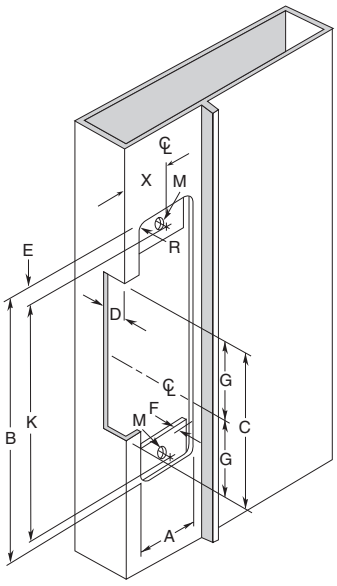

L6504 Aluminum Frames, 1-1/16" Insert Depth
Modular **AL65** with **B604** faceplate

MEASUREMENT	FRACTIONAL INCHES	DECIMAL INCHES	METRIC mm
A	1-1/4	1.250	31.75
B	4-7/8	4.875	123.83
C	3-3/8	3.375	85.73
D	1-3/32	1.094	27.78
E	3/8	.375	9.53
F	1/8*	.125*	3.18*
G	1-11/16	1.688	42.86
X	Vertical Centerline of Door**		
R	5/32	0.156	3.97
K	4-1/8	4.125	104.78
M	12-24	—	—

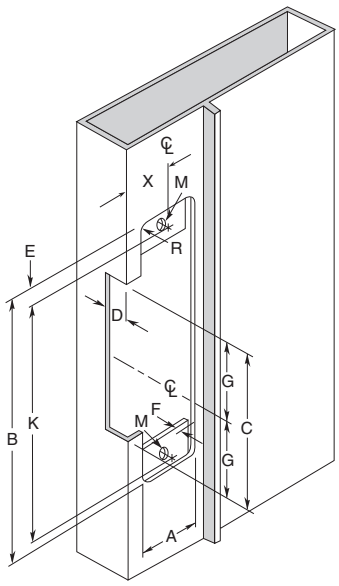

NOTE: Specifications subject to change without notice.

* **Dimension F** is measured from face of mounting tab to face of frame.

** **Dimension X** on the drawing is determined by the vertical centerline of the door. If the latch incorporates a deadlocking pin additional steps will be necessary to ensure proper operation of the deadlocking pin. Measure the thickness of the deadlocking pin and add this thickness to Dimension X to relocate the vertical centerline an appropriate distance on the frame.

© 2014 RUTHERFORD CONTROLS INT'L | A DORMA GROUP COMPANY
WWW.RUTHERFORDCONTROLS.COM • PHONE: 1.800.265.6630 • FAX: 1.800.482.9795 • E-MAIL: SALES@RUTHERFORDCONTROLS.COM
PCN14014
R06/14TG

6 Series Installation Instructions (Continued)

S6505 Aluminum & Wood Frames, 1-3/16" Insert Depth
Modular **AS65** with **B605** faceplate

MEASUREMENT	FRACTIONAL INCHES	DECIMAL INCHES	METRIC mm
A	1-1/8	1.125	28.58
B	5-7/8	5.875	149.23
C	3-3/8	3.375	85.73
D	1-3/16	1.188	30.16
E	1/4	0.250	6.35
F	1/8*	.125*	3.18*
G	1-11/16	1.688	42.86
X	Vertical Centerline of Door**		
R	5/32	.156	3.97
K	5-3/8	5.375	136.53
M	12-24†	—	—

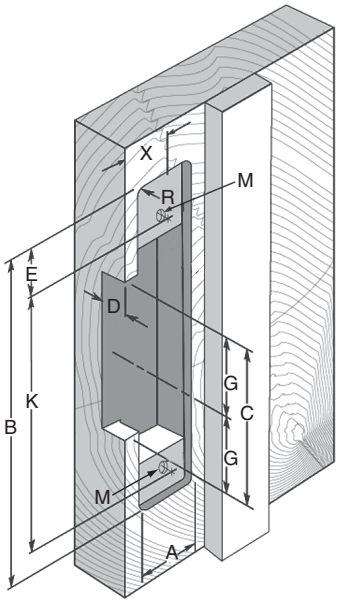

L6505 Aluminum & Wood Frames, 1-1/16" Insert Depth
Modular **AL65** with **B605** faceplate

MEASUREMENT	FRACTIONAL INCHES	DECIMAL INCHES	METRIC mm
A	1-1/8	1.125	28.58
B	5-7/8	5.875	149.23
C	3-3/8	3.375	85.73
D	1-3/32	1.094	27.78
E	1/4	0.250	6.35
F	1/8*	.125*	3.18*
G	1-11/16	1.688	42.86
X	Vertical Centerline of Door**		
R	5/32	.156	3.97
K	5-3/8	5.375	136.53
M	12-24†	—	—

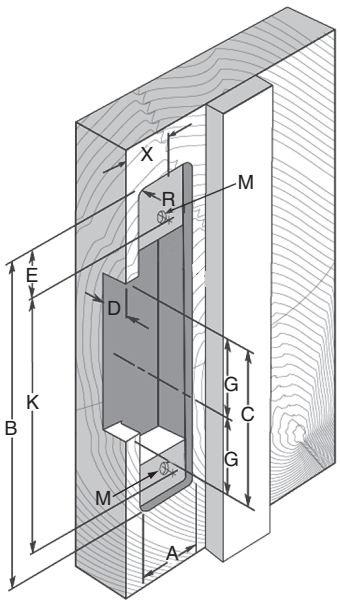

S6507 Aluminum & Wood Frames, 1-3/16" Insert Depth
Modular **AS65** with **B607** faceplate

MEASUREMENT	FRACTIONAL INCHES	DECIMAL INCHES	METRIC mm
A	1-1/4	1.250	31.75
B	6-7/8	6.875	174.63
C	3-3/8	3.375	85.73
D	1-3/16	1.188	30.16
E	3/8	0.375	9.53
F	1/8*	.125*	3.18*
G	1-11/16	1.688	42.86
X	Vertical Centerline of Door**		
R	5/32	.156	3.97
K	6-1/8	6.125	155.58
M	12-24†	—	—

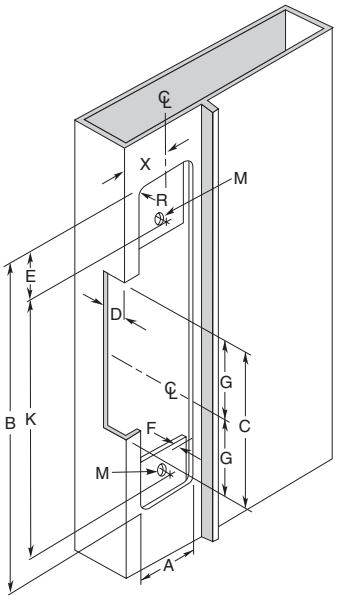

L6507 Aluminum & Wood Frames, 1-1/16" Insert Depth
Modular **AL65** with **B607** faceplate

MEASUREMENT	FRACTIONAL INCHES	DECIMAL INCHES	METRIC mm
A	1-1/4	1.250	31.75
B	6-7/8	6.875	174.63
C	3-3/8	3.375	85.73
D	1-3/32	1.094	27.78
E	3/8	0.375	9.53
F	1/8*	.125*	3.18*
G	1-11/16	1.688	42.86
X	Vertical Centerline of Door**		
R	5/32	.156	3.97
K	6-1/8	6.125	155.58
M	12-24†	—	—

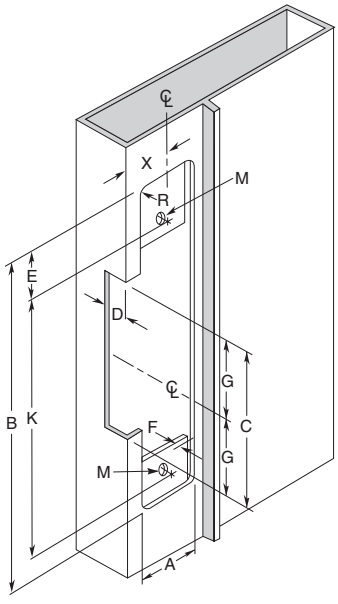

NOTE: Specifications subject to change without notice.

* **Dimension F** is measured from face of mounting tab to face of frame.

** **Dimension X** on the drawing is determined by the vertical centerline of the door. If the latch incorporates a deadlocking pin additional steps will be necessary to ensure proper operation of the deadlocking pin. Measure the thickness of the deadlocking pin and add this thickness to Dimension X to relocate the vertical centerline an appropriate distance on the frame.

† For wood frame door installations, substitute #12 wood screws for dimension M.

© 2014 RUTHERFORD CONTROLS INT'L | A DORMA GROUP COMPANY
WWW.RUTHERFORDCONTROLS.COM • PHONE: 1.800.265.6630 • FAX: 1.800.482.9795 • E-MAIL: SALES@RUTHERFORDCONTROLS.COM

S6508 Aluminum & Wood Frames, 1-3/16" Insert Depth
Modular **AS65** with **B608** faceplate

MEASUREMENT	FRACTIONAL INCHES	DECIMAL INCHES	METRIC mm
A	1-7/16	1.438	36.51
B	7-15/16	7.938	201.61
C	3-3/8	3.375	85.73
D	1-3/16	1.188	30.16
E	1/4	0.250	6.35
F	1/8*	.125*	3.18*
G	1-11/16	1.688	42.86
X	Vertical Centerline of Door**		
R	5/32	.156	3.97
K	7-7/16	7.438	188.91
M	12-24†	—	—

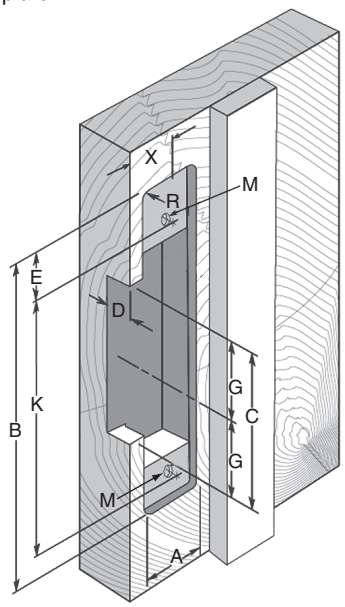

L6508 Aluminum & Wood Frames, 1-1/16" Insert Depth
Modular **AL65** with **B608** faceplate

MEASUREMENT	FRACTIONAL INCHES	DECIMAL INCHES	METRIC mm
A	1-7/16	1.438	36.51
B	7-15/16	7.938	201.61
C	3-3/8	3.375	85.73
D	1-3/32	1.094	27.78
E	1/4	0.250	6.35
F	1/8*	.125*	3.18*
G	1-11/16	1.688	42.86
X	Vertical Centerline of Door**		
R	5/32	.156	3.97
K	7-7/16	7.438	188.91
M	12-24†	—	—

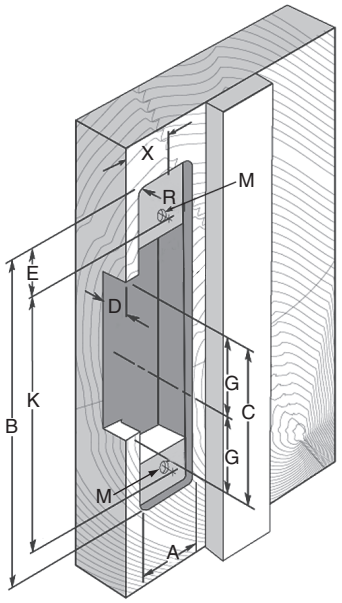

S6514 Hollow Metal Frames, 1-3/16" Insert Depth
Modular **AS65** with **B614** faceplate

MEASUREMENT	FRACTIONAL INCHES	DECIMAL INCHES	METRIC mm
A	1-1/4	1.250	31.75
B	4-7/8	4.875	123.83
C	3-3/8	3.375	85.73
D	1-3/16	1.188	30.16
E	3/8	.375	9.53
F	1/8*	.125*	3.18*
G	1-11/16	1.688	42.86
X	Vertical Centerline of Door**		
K	4-1/8	4.125	104.78
M	12-24	—	—

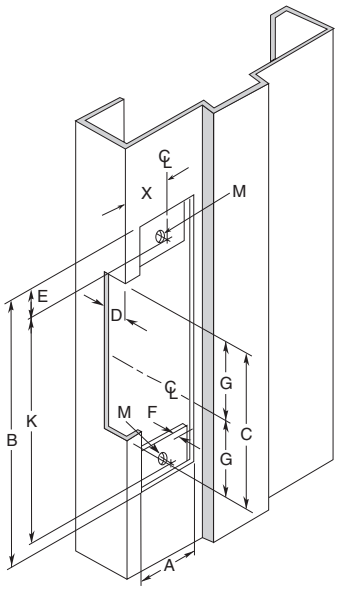

L6514 Hollow Metal Frames, 1-1/16" Insert Depth
Modular **AL65** with **B614** faceplate

MEASUREMENT	FRACTIONAL INCHES	DECIMAL INCHES	METRIC mm
A	1-1/4	1.250	31.75
B	4-7/8	4.875	123.83
C	3-3/8	3.375	85.73
D	1-3/32	1.094	27.78
E	3/8	.375	9.53
F	1/8*	.125*	3.18*
G	1-11/16	1.688	42.86
X	Vertical Centerline of Door**		
K	4-1/8	4.125	104.78
M	12-24	—	—

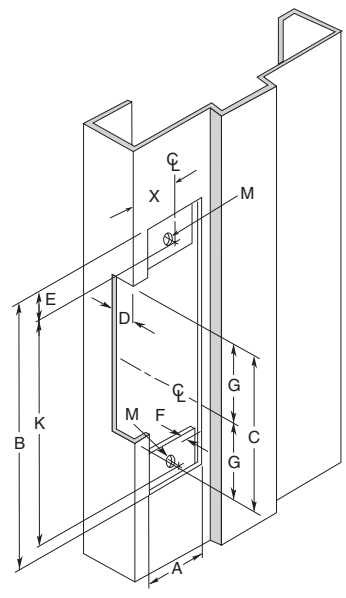

NOTE: Specifications subject to change without notice.

* **Dimension F** is measured from face of mounting tab to face of frame.

** **Dimension X** on the drawing is determined by the vertical centerline of the door. If the latch incorporates a deadlocking pin additional steps will be necessary to ensure proper operation of the deadlocking pin. Measure the thickness of the deadlocking pin and add this thickness to Dimension X to relocate the vertical centerline an appropriate distance on the frame.

† For wood frame door installations, substitute #12 wood screws for dimension M.

© 2014 RUTHERFORD CONTROLS INT'L | A DORMA GROUP COMPANY

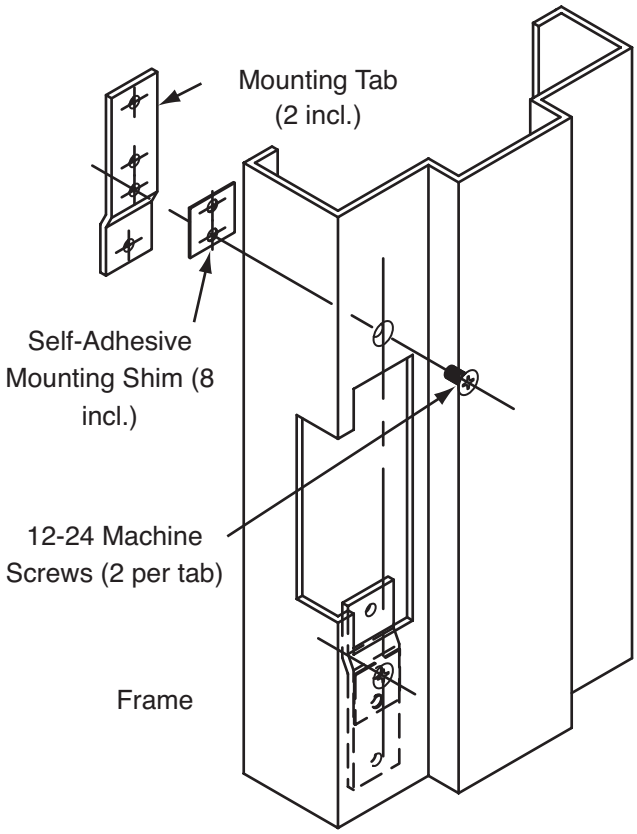

Mounting Tab Kit Instructions

Mounting tab kit is for use with aluminum and steel frames that do not have factory installed mounting tabs for electric strike installation.

1. Prepare the frame as shown in the approximate drawing. Fasten the mounting tab to the faceplate of the strike, selecting the appropriate shims for the installation.
2. Using the assembled strike and tabs as a template, place against the frame and mark the mounting hole locations. Remove and drill a 3/16" hole in frame for each mounting tab and countersink the frame.
3. Remove the tabs from the faceplate and install in the frame using the 12-24 x 3/8" machine screws supplied. Tabs are zinc plated and drilled and tapped for this purpose.
4. Make final electrical connections per wiring instructions and mount strike to the tabs with the 12-24 x 3/8" machine screws.

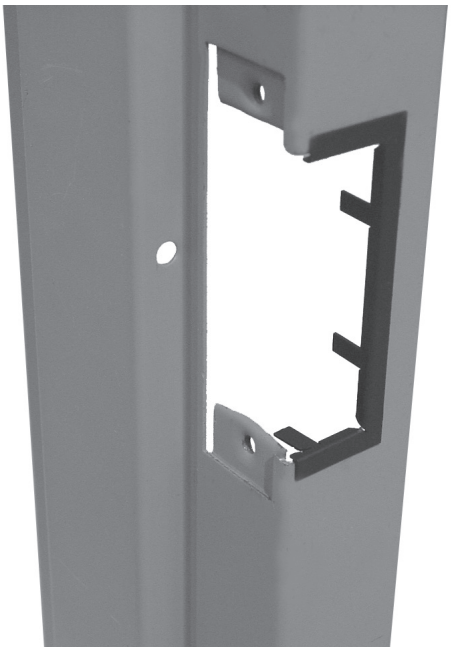

Trim Plate Instructions

1. Position the Trim Plate on the frame cut-out to verify fit and coverage.
2. Adjust cut-out if required.
3. Bend the four tabs to hold the Trim Plate onto the frame.
4. For a tighter fit, pre-bend the two long flange tabs before sliding onto the frame where space allows.
5. Secure the strike to the frame as per strike installation instructions.

© 2014 RUTHERFORD CONTROLS INT'L | A DORMA GROUP COMPANY
WWW.RUTHERFORDCONTROLS.COM • PHONE: 1.800.265.6630 • FAX: 1.800.482.9795 • E-MAIL: SALES@RUTHERFORDCONTROLS.COM

Fail Unlocked

Rotate the adjustment screw so the dimple is fully rotated to opposite the faceplate side of the strike (fully counter clockwise). Your strike is now fail unlocked and requires power to lock. See Fig. 1.

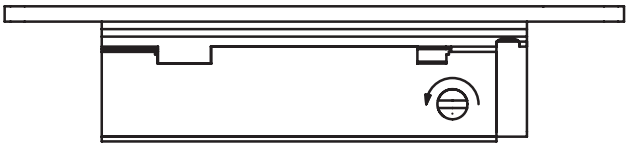

Fig. 1 Fail Unlocked = screw fully counter clockwise

Fail Locked

Rotate the adjustment screw so the dimple is fully rotated to the faceplate side of the strike (fully clockwise). Your strike is now fail locked and requires power to unlock the door. See Fig 2.

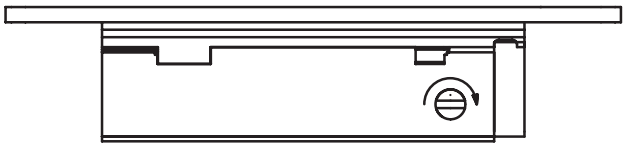

Fig. 2 Fail Locked = screw fully clockwise

Lip Bracket Adjustment

If your door or latch is out of adjustment, the insert can be adjusted forward or back as required for proper alignment to the latch. See Fig. 3

1. Remove the strike from the frame.
2. Remove the faceplate from the strike.
3. 2 screws secure the lip bracket to the main insert.
4. Loosen these screws approximately 1-1/2 to 2 full turns to allow the insert to move forward or backward as required.
5. Once the adjustment is made tighten all screws and reinstall the strike in the frame.

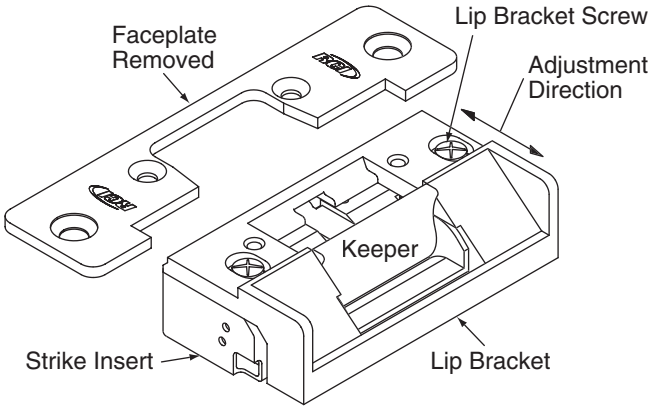

Fig. 3 Lip bracket adjustment

Wiring Instructions

NOTE: Overheated or Burnt Coils caused by incorrect input voltage / wire harness combinations will not be covered under warranty.

Use 12VDC wire harness for 12VDC or 12-24VAC input power.

Use 24VDC wire harness for 24VDC input power only.

Attach the red wire to (+) positive of the power supply. Attach the black wire to the (–) negative of the power supply (see Fig. 4). If using AC power, polarity is not observed.

NOTE: If a suppression diode is required for access control, observe proper polarity.

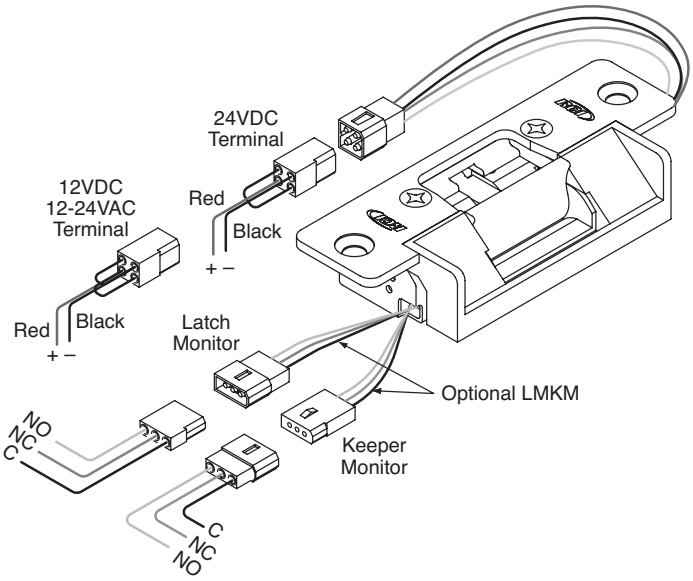

Fig. 4 Wiring the 6 Series electric strike

Latch Monitor Wires

Black = Common (C)

Blue = Normally Close (NC)

Orange = Normally Open (NO)

Keeper Monitor Wires

Black = Common (C)

Yellow = Normally Closed (NC)

Green = Normally Open (NO)

When using LMKM option:

If the lockset on the door has a 1/2" or 5/8" latch projection, The L65 model is appropriate.

If the lockset on the door has a 3/4" latch projection, you must use the S65 model.

NOTE: Contacts are indicated with the keeper in a closed and locked condition, with no latch present.

© 2014 RUTHERFORD CONTROLS INT'L | A DORMA GROUP COMPANY

6 Series Troubleshooting

	Problem	Possible Causes	Solution
1.	**Strike will not lock or unlock properly**	**No power to the insert**	Using a multimeter, confirm that you have the correct output voltage at the power supply. Using a multimeter, confirm that you have the correct input voltage at the strike. Confirm that all connections are tight and secure.
		Incorrect voltage used	Confirm that the insert and power supply are the proper voltage.
		Strike is binding	Confirm that the strike keeper functions when the door is open. If the strike operates correctly, adjust door or strike to eliminate any backpressure. Confirm that the strike cavity depth is compatible with the lock set.
2.	**Strike releases but won't buzz**	**Improper power supply**	Replace the power supply with a correct voltage AC power supply, and the 12V connector. If this cannot be done, a DC piezo buzzer can be installed.
3.	**Strike makes a buzzing sound**	**Improper power supply**	Replace the power supply with a correct voltage DC power supply.
		Improper application	A strike connected to an AC power supply will buzz unless a rectifier is installed.
4.	**Insert has a burnt smell**	**Improper voltage**	Confirm that you have the correct output voltage at the power supply.
		Improper installation	Confirm that the correct connector was used when installing the strike 12V for 12VDC & 12-24VAC, 24V for 24VDC only. Confirm that all connections are tight and secure.
5.	**Mortise lock not dead latching**	**Improper Installation**	Check alignment of dead latch and lip bracket ramp.
		Door has sagged	Adjust door alignment.
6.	**Cylindrical deadlatching not working**	**Improper Installation / Door has warped**	Adjust the strike horizontal adjustment. (See Installation Instructions).
7.	**Door won't latch**	**Door has warped or sagged creating excessive back pressure**	Re-align door in frame or replace.
8.	**Monitor switch is not functioning**	**Short in wiring**	Confirm that all connections are tight and secure. Using a multimeter confirm continuity of the N/O & N/C sides of the switch.
		Latch or keeper are not functioning properly	Confirm that the keeper is closing properly and that the lever in the strike cavity is operating freely.

© 2014 RUTHERFORD CONTROLS INT'L | A DORMA GROUP COMPANY
WWW.RUTHERFORDCONTROLS.COM • PHONE: 1.800.265.6630 • FAX: 1.800.482.9795 • E-MAIL: SALES@RUTHERFORDCONTROLS.COM