INSTALLATION

3590 Standard Locking Pin

With Spring Release – No Alarm

RUTHERFORD CONTROLS
A DORMA Group Company

1. Prior to installation, follow the programming instructions for the lock.

2. Ensure that the Card or Fob can be read through the material, the lock is installed in.

3. See Fig.1 & Fig.2 for details.

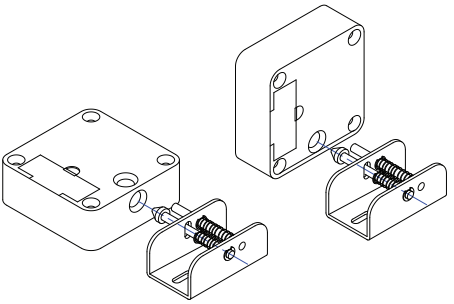

Fig. 1 - Side Mount

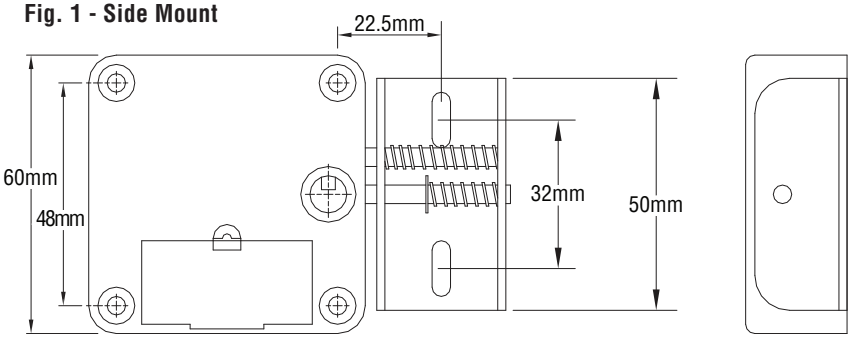

Fig. 2 - Front Mount

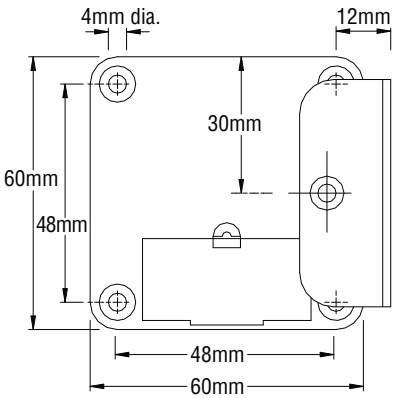

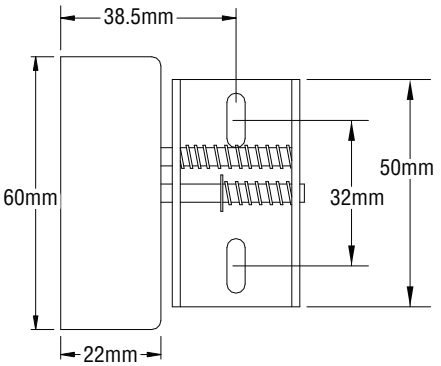

© 2014 RUTHERFORD CONTROLS INT'L I A DORMA GROUP COMPANY
WWW.RUTHERFORDCONTROLS.COM • PHONE: 1.800.265.6630 • FAX: 1.800.482.9795 • E-MAIL: SALES@RUTHERFORDCONTROLS.COM