INSTALLATION 3360

Fail Unlocked
Glass Door Cushion-Lok®

In or Out... we make it Easy!®

RUTHERFORD CONTROLS
A DORMA Group Company

Instructions

1. Prepare lock for conduit or wire entry.
2. Determine vertical or horizontal location of lock. Directly above the door pull or 50% of the door's height is normally best.
3. Coat interior surfaces of aluminum extrusions with the adhesive provided wherever contact with glass will occur.
4. Slide electric lock on glass and dead bolt onto the glass door. Support in place until adhesive has cured (approx. 8 hrs).
5. Install decorative wire mold if desired. (See your electrical supplier.)
6. Connect wires from low voltage side of transformer to terminal screws on lock. Although these locks are not polarity sensitive, be certain to observe proper polarity if a suppression diode is required for access control applications.
7. Install strike into aluminum housing.

RCI quality and reliability comes from hardened "high use" parts ensuring excellent security for many years.
RCI products are designed to provide maximum holding power and make manipulation extremely difficult.

Dimensional Detail					
Measurements	A	B	C	D*	E
Fractional Inches	1-9/16	5-11/16	1-25/32	13/32	5/32
Decimal Inches	1.575	5.709	1.772	0.394	0.157
Metric mm	40.0	145.0	45.0	10.0	4.0

NOTE: Site dimensions are the installer's or frame manufacturer's responsibility. Horizontal centerlines are located by bolt location. * Also available in 12mm (15/32") Not to scale. Specifications are subject to change without notice.

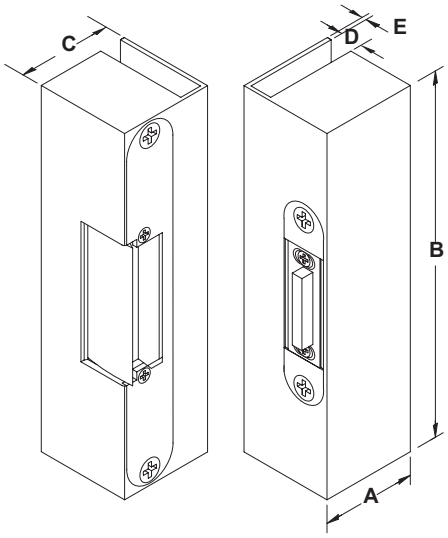

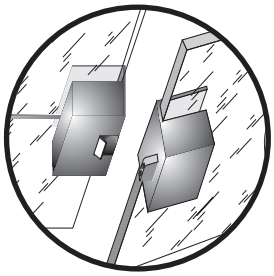

All measurements assume a 1/8" gap between door and frame.

CUSHION-LOK™ FOR TEMPERED GLASS DOORS WITH NO FRAME

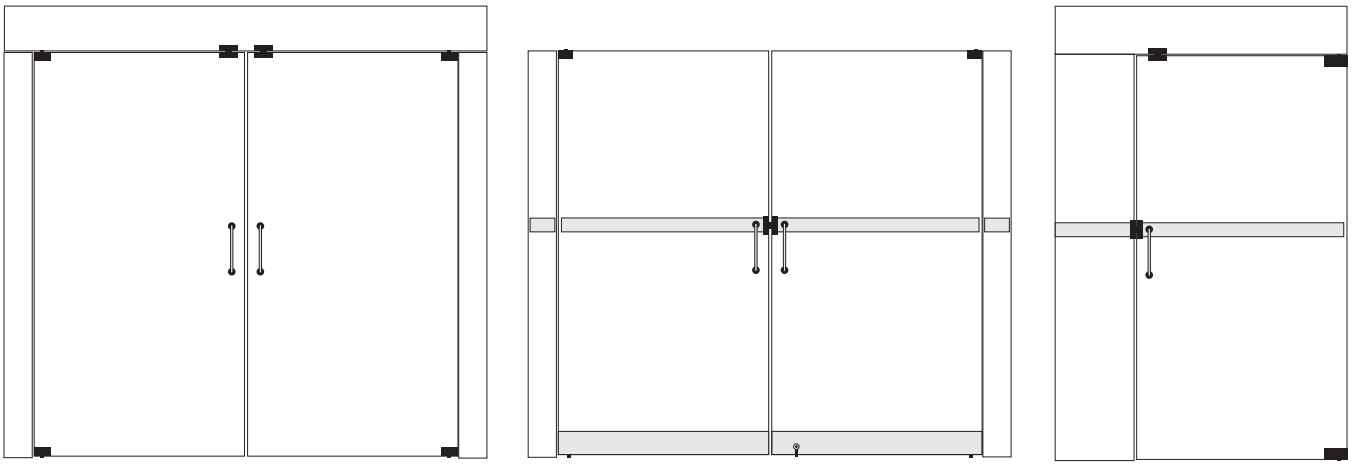

© 2014 RUTHERFORD CONTROLS INT'L | A DORMA GROUP COMPANY
WWW.RUTHERFORDCONTROLS.COM • PHONE: 1.800.265.6630 • FAX: 1.800.482.9795 • E-MAIL: SALES@RUTHERFORDCONTROLS.COM