RYOBI® DOOR CLOSERS

INSTALLATION INSTRUCTIONS
HOLD-OPEN

A45-501-H

STANDARD APPLICATION

NOTE : BODY SHAPE MAY BE DIFFERENT FROM SERIES TO SERIES.

1. ATTACH ARM TO BODY.

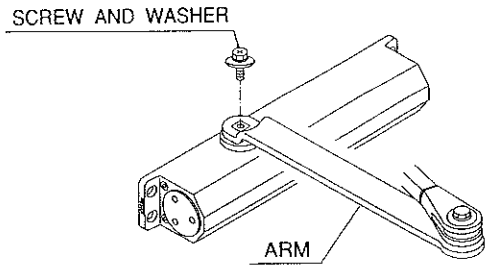

2. ATTACH BODY TO DOOR.

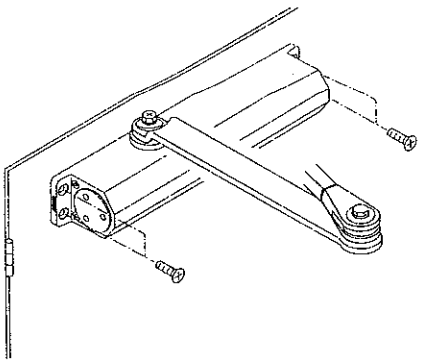

3. POSITION STANDARD ARM SHOE ON FRAME AND FASTEN WITH TWO SCREWS.

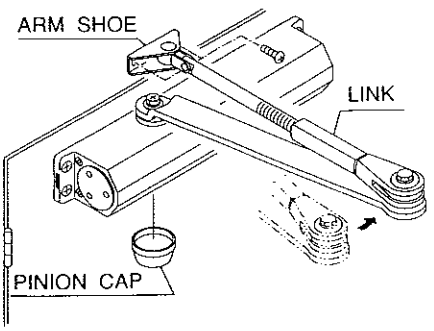

NOTE : ADJUST LENGTH OF ADJUSTABLE LINK TO OBTAIN A 90° ANGLE TO DOOR.

4. OPEN DOOR TO THE DESIRED HOLD OPEN ANGLE AND FIRMLY FASTEN LOCKING BOLT WITH A SPANNER.

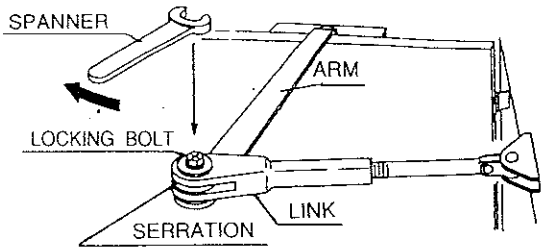

NOTE : DAMAGE TO THE HOLD OPEN DEVICE MAY OCCUR IF THE LOCKING BOLT IS NOT FIRMLY TIGHTENED.

5. SCREW OUT ADJUSTABLE LINK. TURN ADJUSTABLE SCREW CLOCKWISE FOR STRONGER HOLD OPEN FORCE. TURN ADJUSTABLE SCREW COUNTER-CLOCKWISE FOR WEAKER HOLD OPEN FORCE.

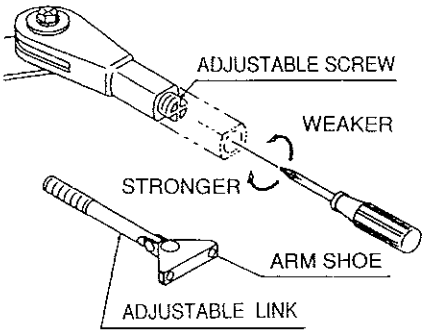

PARALLEL ARM APPLICATION

A45503-PH

NOTE : BODY SHAPE MAY BE DIFFERENT FROM SERIES TO SERIES.

1. POSITION PARALLEL BRACKET ON FRAME AND FASTEN WITH FOUR SCREWS, AND ATTACH BODY TO DOOR.

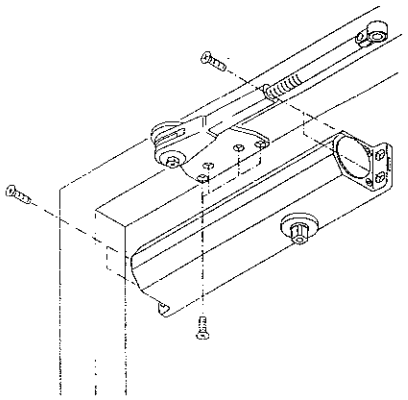

2. ATTACH ARM TO THE BODY.

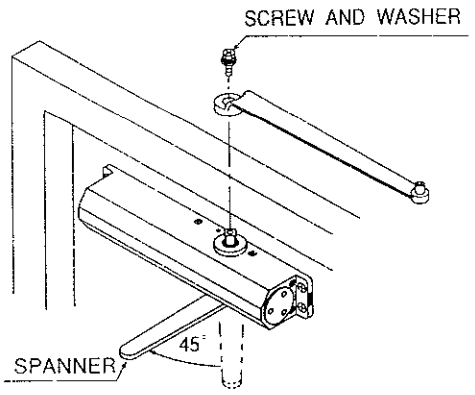

3. CONNECT ARM TO LINK.

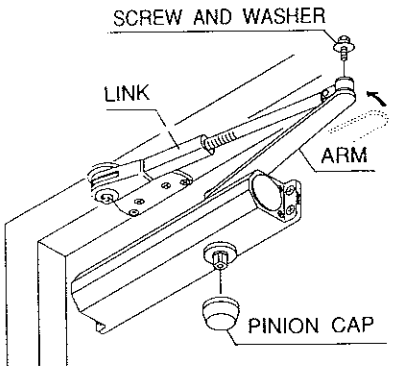

NOTE : ADJUST LENGTH OF ADJUSTABLE LINK TO KEEP CLEAR BETWEEN ARM AND DOOR SURFACE.

4. OPEN DOOR TO THE DESIRED HOLD OPEN ANGLE AND FIRMLY FASTEN LOCKING BOLT WITH A SPANNER.

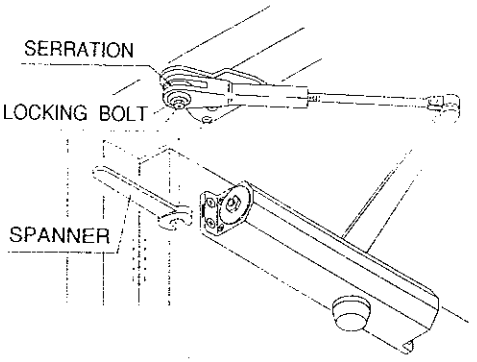

NOTE : DAMAGE TO THE HOLD OPEN DEVICE MAY OCCUR IF THE LOCKING BOLT IS NOT FIRMLY TIGHTENED.

5. SCREW OUT ADJUSTABLE LINK. TURN ADJUSTABLE SCREW CLOCKWISE FOR STRONGER HOLD OPEN FORCE.TURN ADJUSTABLE SCREW COUNTER-CLOCKWISE FOR WEAKER HOLD OPEN FORCE.

