HL6

Tubular push/pull hardware



The HL6 push/pull hardware is a durable and versatile tubular latching solution for commercial and institutional settings. The traditional design has a short throw angle, allowing the door to be opened with an easy push or pull action, even when hands are not free.

Features and benefits

- Quiet functionality
- Passage function
- Six mounting positions
- 10 finishes, including antimicrobial options
- Six available options, including engraving on handles
- Four backset sizes
- Two strike options
- Non-handed
- UL listed for all single labeled metal or wood doors

Dimensions

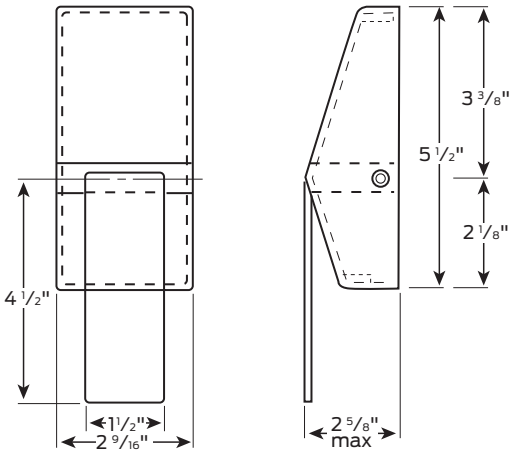

Functions

Schlage	ANSI
HL6	–

Passage lock

- Latchbolt retracted by paddle from either side
- Inside paddle always free for immediate egress

