Corbin Russwin

ASSA ABLOY

M107 Strike for WS Series ED5470 (B) Exit Device Surface Vertical Rod

FM702 08/08
(617417495)

NOTES:

1. Use in combination with Installation Instructions FM164A, FM236 & FM543.
2. With door open, actuate pushpad to retract upper latch. Attach lower rod to bottom of slide and adjust bolt so that it clears the finished floor by 1/4". (See figures 1 & 2 for appropriate Finished Floor application).
3. Verify location of the Flush Mounted Strike Template. Prepare the strike holes (See figures 1 & 2) and install the M107 Strike (For "Threshold" door ways, prepare a 1" (25) Dia. hole through the threshold for bolt clearance). Spot and prepare (2) screw anchor holes by drilling 3/8" (10) Dia. x 1" (25) deep holes & 1" (25) Dia. x 3/4" (19) deep hole. Orient in place and attach with 1/4-20 x 1/2" (13) fasteners and anchors.
   *** Install screw anchors:** Place the anchor in the prepared hole, place punch through the threaded hole of the anchor, drive with a hammer until seated, remove punch and install by bolting M107 Strike to floor with (2) 1/4-20 x 1/2" (13) Machine Screws.
4. With door open, actuate pushpad to retract upper latch. Adjust bolt height by pulling the rod out of the guide and slide, rotate until the bolt clears the M107 Strike by 1/8".

Figure 1 - Threshold Application

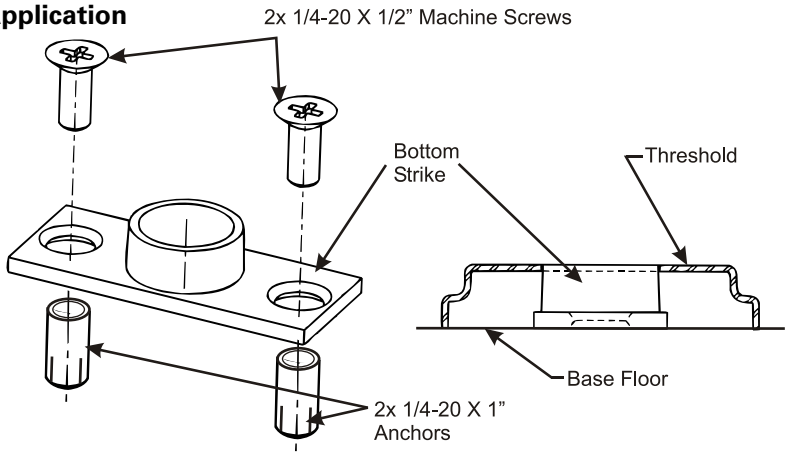

Figure 2 - Flush Floor Application

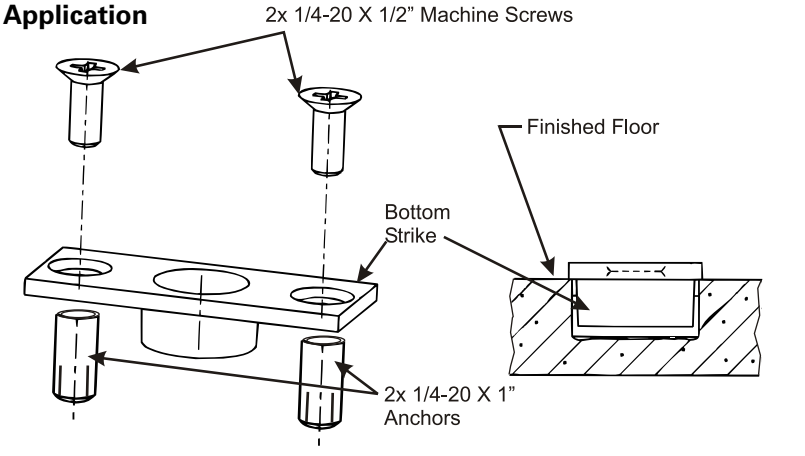

ASSA ABLOY, the global leader in door opening solutions

Door Marker Template

BOTTOM STRIKE for THRESHOLD or FLUSH MOUNT

Dimensions given in Inches (mm)

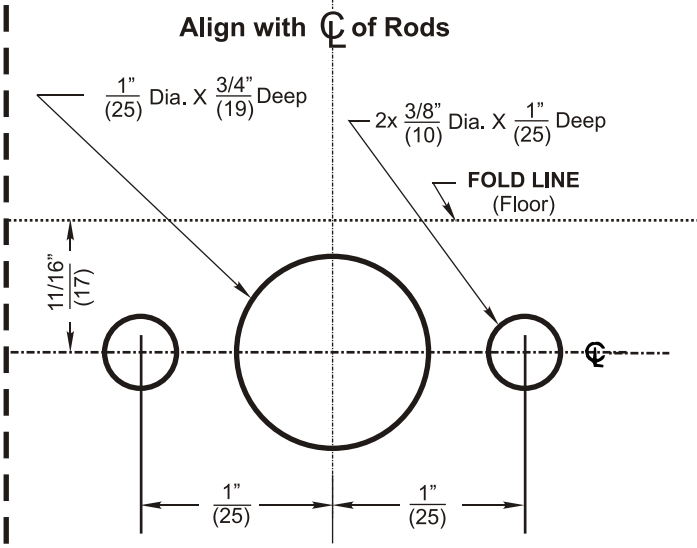

CAUTION: Office copiers and facsimile machines may change the size of a drawing and make the template inaccurate to use as a door marker. If this is not the original template packed with the trim, use only the holes on the door (do not use template as a door marker).

Copyright © 2008 Corbin Russwin, Inc., an ASSA ABLOY Group company. All rights reserved. Reproduction in whole or in part without the express written permission of Corbin Russwin, Inc. is prohibited.

CUT LINE

In U.S.: Corbin Russwin, Inc.
225 Episcopal Road
Berlin, CT 06037-4004
www.corbinrusswin.com

Technical Product Support:
Phone: 888-607-5703 Fax: 800-659-7293

In Canada: ASSA ABLOY Door Security Solutions Canada
160 Four Valley Drive
Vaughan, ON, L4K 4T9
www.assaabloycanadadss.ca