Installation Instructions

THERMAL PIN PACKET - 744F688

For Pairs of Doors with "Less Bottom Rod" Used on Fire Rated Doors for:

ED5470B SVR Exit Devices
ED5860B CVR Exit Devices

FM547A 02/08 (617416047)

In U.S.: Corbin Russwin, Inc.
225 Episcopal Road
Berlin, CT 06037-4004
www.corbinrusswin.com

Technical Product Support:
Phone: 888-607-5703 Fax: 800-659-7293
In Canada: ASSA ABLOY DSS Canada
160 Four Valley Drive
Vaughan, ON, L4K 4T9
www.assaabloycanadadss.ca

Corbin Russwin®

ASSA ABLOY

1. Drill 5/8" diameter hole as shown in "active" leaf of door edge. Install Cap Plug.
2. Drill 9/16" diameter hole as shown in "inactive" leaf of door edge.
3. Install Thermal Pin and Sleeve.
   a. **Metal Doors:**
      Insert Sleeve into "inactive" leaf of door edge.
      Insert Thermal Pin into Sleeve.
      Using wood block as spacer, tap Thermal Pin and Sleeve into 9/16" hole in door edge with hammer.
   b. **Wood Doors:**
      Install Sleeve onto end of Thermal Pin.
      Using wood block as spacer, tap Thermal Pin and Sleeve into 9/16" hole in door edge with hammer.

Note: Reinforcement required where Thermal Pin and Cap Plug are to be installed.

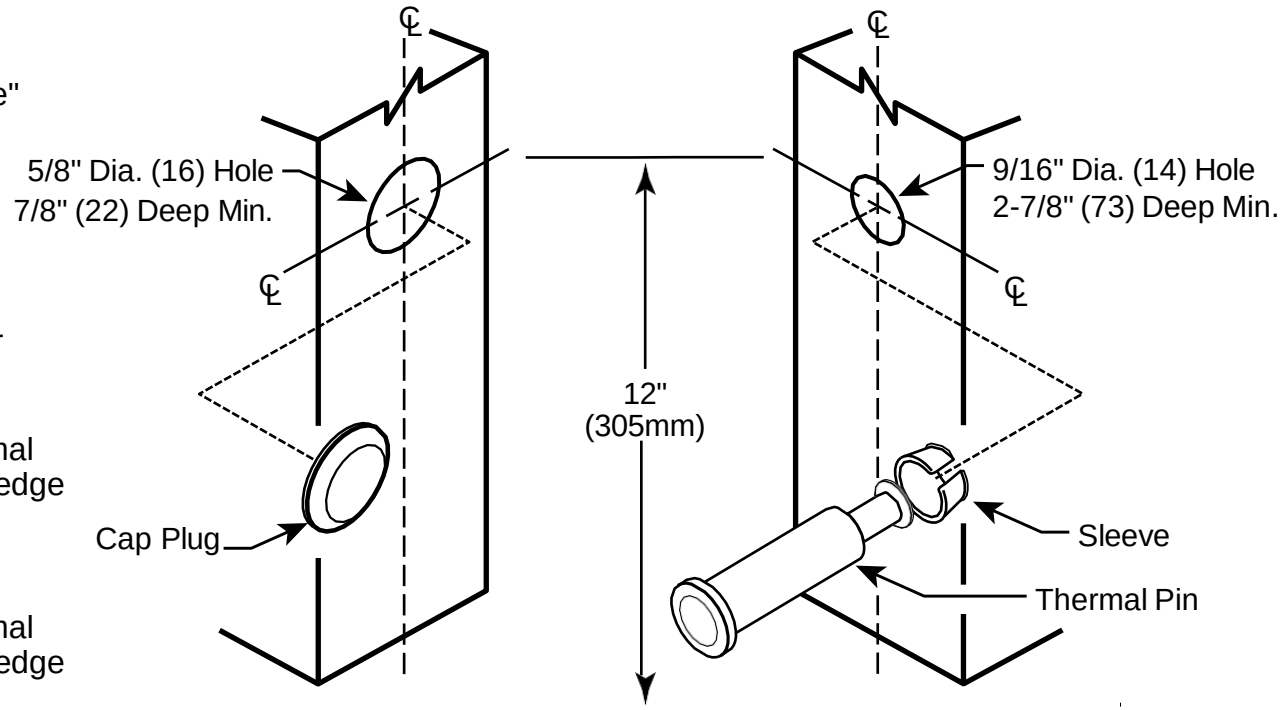

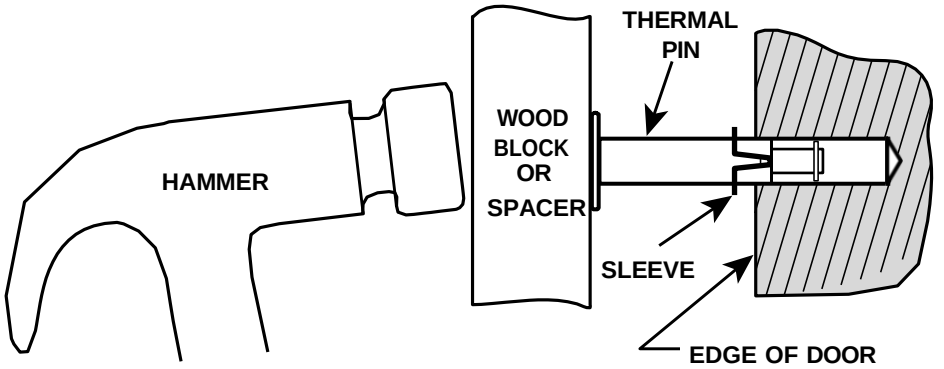

ASSA ABLOY, the global leader in door opening solutions

Copyright © 2008 Corbin Russwin, Inc. All rights reserved. Reproduction in whole or in part without the express written permission of Corbin Russwin, Inc. is prohibited.