TAPE THIS TAB TO FRAME STOP

TOP STRIKE

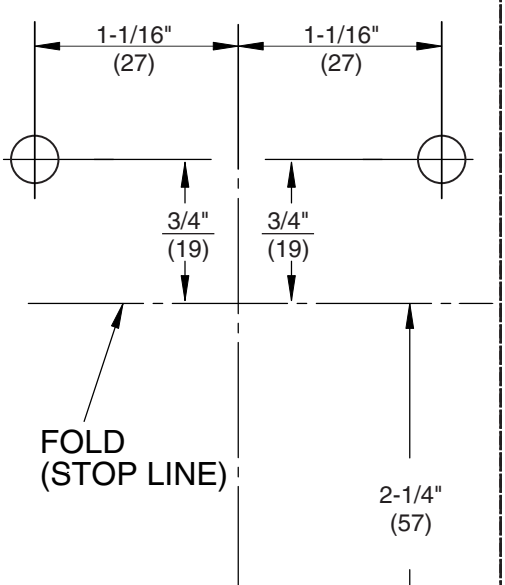

ALIGN WITH ℄ OF RODS

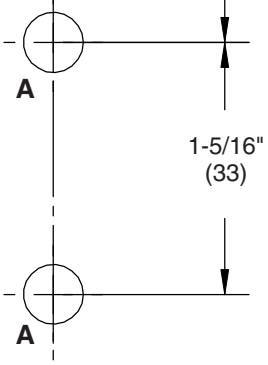

DOOR	FASTNER	HOLE 'A'
METAL REINFORCED	SCREW	1/4-20 TAP
HOLLOW METAL & ALUMINUM	OPTIONAL SNB	5/16 (8) DIA INSIDE DOOR FACE 3/8 (10) DIA OUTSIDE DOOR FACE
ALUMINUM	SNB	THRU DOOR

TAPE TO DOOR

TOP LATCH & STRIKE

Notes:

1. Strike template used for ED5470 devices. Use with installation instructions FM 164.
2. Mark rod centerline on door face. Note that the centerline of the rods and strikes used to install top and bottom bolts, is not the Vertical Reference centerline.
3. For Fire-Rated Less Bottom Rod applications, refer to Popper Installation Instructions FM 547.
4. **Top Strike Installation:** With door securely closed, tape template to door and frame stop. Spot and prepare outer holes for top strike using (2) 10-24 Round Head screws provided. With template still in place, assemble upper mounting plate to door with the strike angle engaged into the top strike, as shown below. Adjust hole locations for the mounting plate if required. Install latch and align top strike between the trigger and latch bolt. Spot and prepare (2) inner holes using the trike as a template. Secure with (2) remaining 10-24 Round Head screws.
5. Unreinforced frames require that 10-24 blind rivet nuts (by others) be used to bolt strike. Frames are considered not reinforced when strike mounting screws cannot engage (3) full threads.
6. Dimensions are given in inches (mm).
7. **CAUTION:** Office copiers and facsimile machines may change the size of a drawing and make the template inaccurate to use as a door marker.

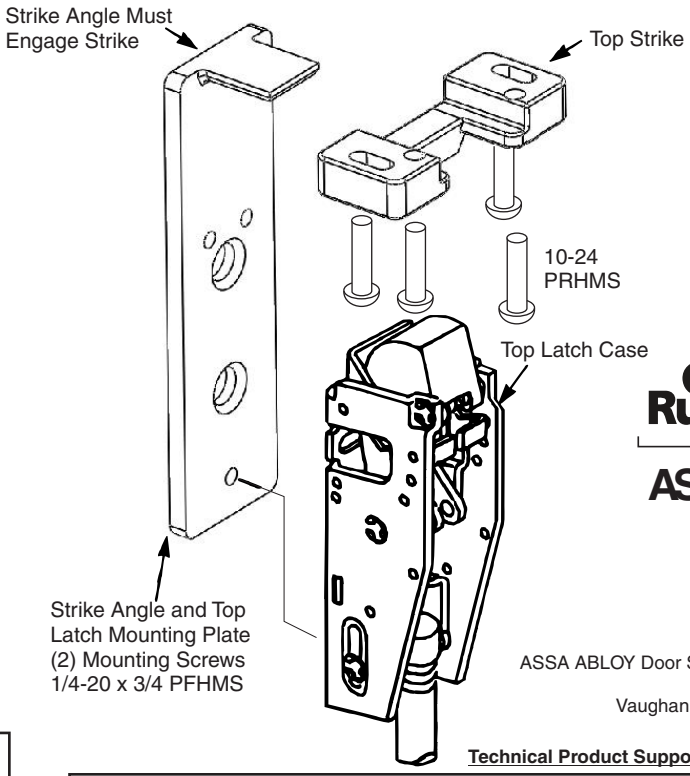

CUTLINE

Top Strike and Strike Angle Mounting Plate for ED5470 (B) Series Surface Vertical Rod Exit Devices

Corbin Russwin®

ASSA ABLOY

In U.S.:
Corbin Russwin, Inc.
225 Episcopal Road
Berlin, CT 06037 USA
www.corbinrusswin.com

In Canada:
ASSA ABLOY Door Security Solutions Canada
160 Four Valley Drive
Vaughan, Ontario, Canada L4K4T9
www.assaabloy.ca

Technical Product Support: Phone: 888-607-5703

Copyright © 2013 Corbin Russwin, Inc. All rights reserved.
Reproduction in whole or in part without the express written permission of Corbin Russwin, Inc. is prohibited.