Corbin Russwin

Installation Instructions

ED4000 & ED5000 SERIES EXIT DEVICES with M61 ALARM OPTION and ED40AK & ED50AK ALARM RETROFIT KIT

FM 542A 11/03
(617416036)

EMERGENCY EXIT - ALARM WILL SOUND

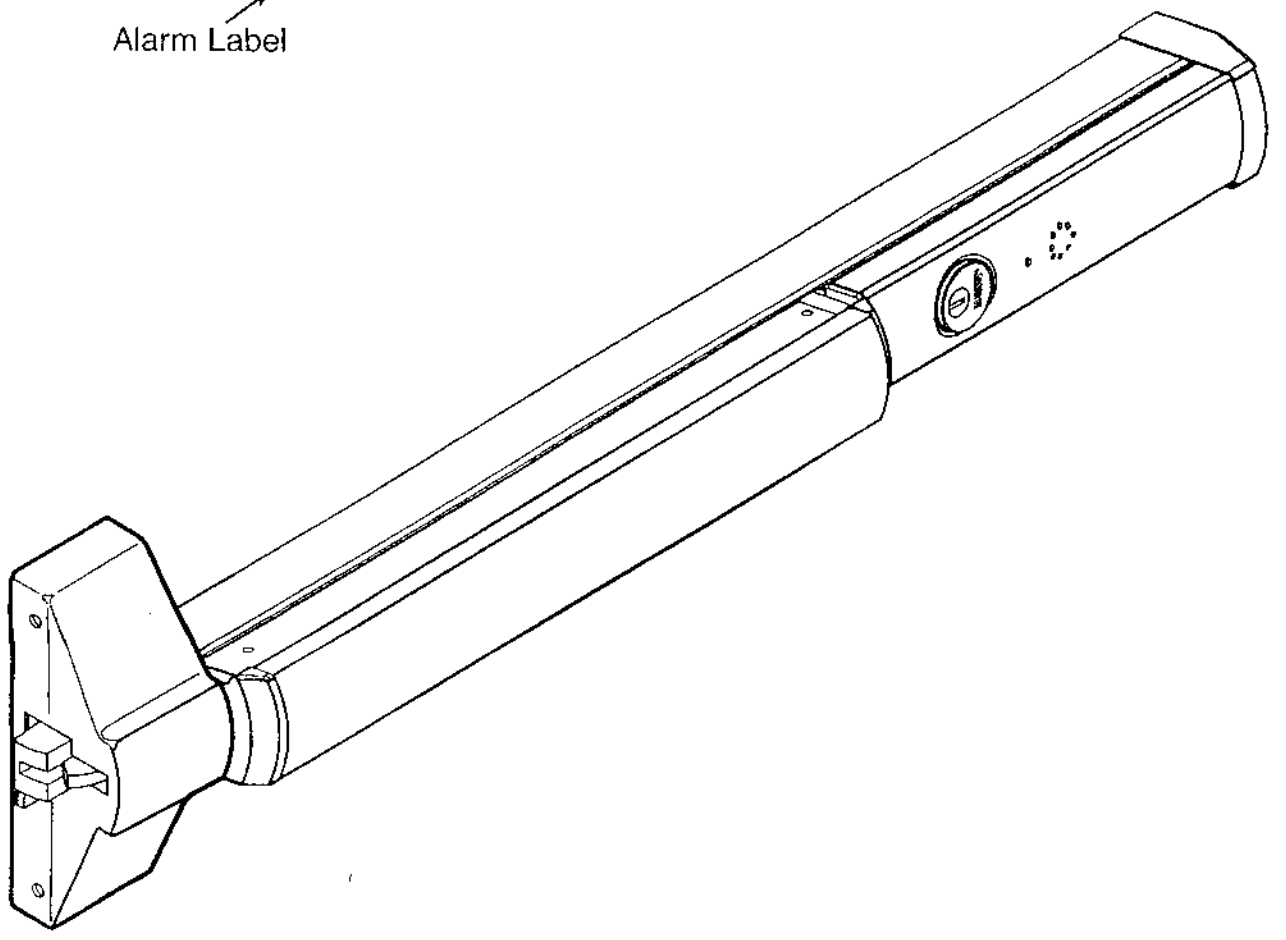

ED4000 & ED5000 Series Exit Devices x M61 Alarm Option

Available for all exit device types

ED40AK & ED50AK Alarm Retrofit Kit

Available for field retrofit of all devices except Surface Vertical Rod

EXIT ALARM INSTRUCTIONS

STEP 1 – Install Touchbar Switch Retrofit Applications Only - All Except SVR

1) Remove Device from door.
2) Remove End Cover and black End Plate. Discard End Plate.
3) If Device has dogging, remove dogging assembly with (2) screws and discard.
4) Remove Bottom Channel Cover from Device.
5) Locate rear touchbar mounting hole (A) as indicated below. Remove screw, if one is assembled, and install in opposite hole.
6) Remove screw from Touchbar Switch Bracket and align screw hole over touchbar mounting hole (A). Reinstall screw from bottom of channel to secure Switch Bracket.
7) Verify that moving the Touchbar causes the switch to trip. Adjust switch lever as required.
8) Replace Bottom Channel Cover.

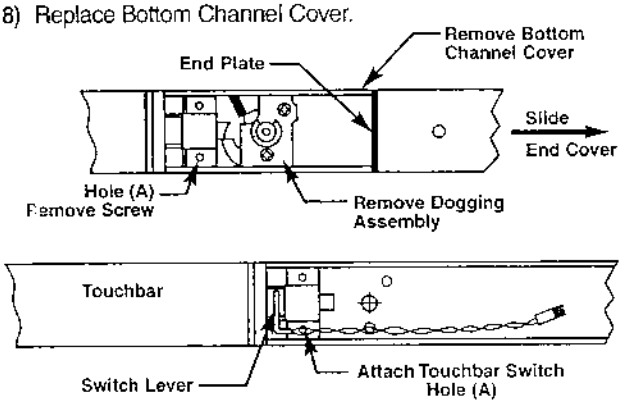

STEP 2 – Size End Cover

1) For NEW installations, follow procedures in Device installation instructions.
2) For RETROFIT applications, cut new Alarm End Cover to same length as old End Cover.
3) Cut Alarm End Cover on end opposite Cylinder hole as shown.
   Note: Cover can be cut to a minimum length of 9-1/4" (235 mm), not including thickness of End Plate.

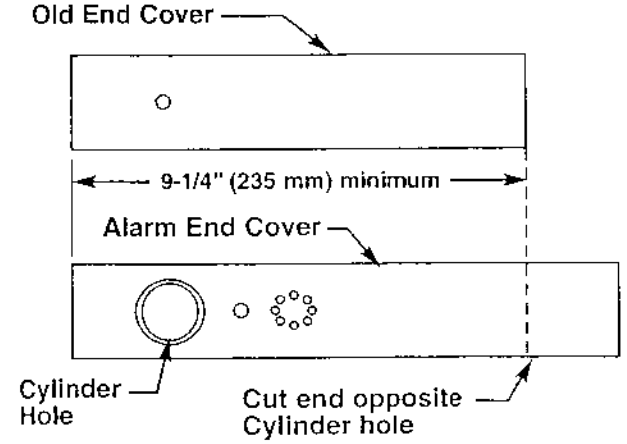

STEP 3 – Assemble Alarm End Cover

1) Slide Alarm Housing Assembly into Alarm End Cover, making sure tabs are engaged and LED is inserted into lens.
2) Insert Cylinder, with Collar if required, into Alarm End Cover aligning cylinder grooves with locating tabs on housing assembly.
   Note: Cylinder keyway to be positioned towards Touchbar.
3) Install Arming Switch Activator over Cylinder so that Activator legs are on each side of toggle switch.
4) Secure parts with Alarm Cylinder Nut, making sure Activator rotates freely. Check that rotating the key causes Activator to trip switch in both directions. Bend Activator legs as required.

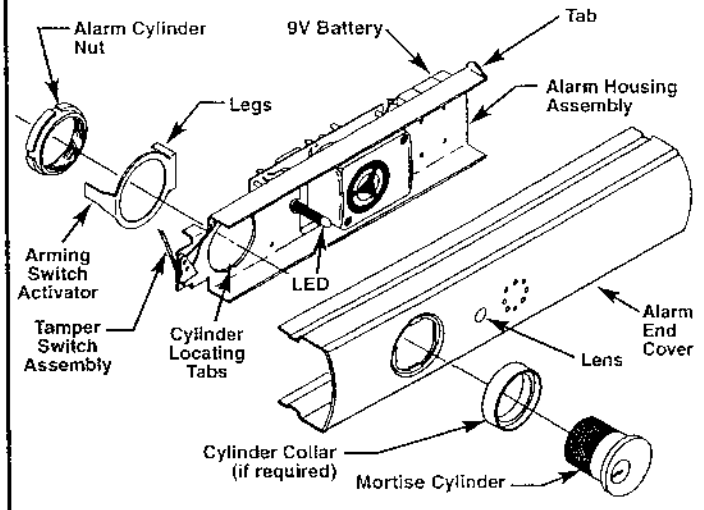

STEP 4 – Install Alarm Assembly

1) Install 9V Battery with correct polarity. Verify all connections and switch settings. (See Tables 1, 2 and 3 on next page).

2a) **ALL EXCEPT SVR**
Attach (2) white connectors.

2b) **SVR FACTORY-WIRED ONLY**
Attach (2) white connectors and (2) red connectors.

3) Install Alarm End Plate while sliding Alarm End Cover onto Device. Make sure wires are not pinched or cut.
4) Install Device on door and check alarm functions.
5) Install Alarm Label on Touchbar or on door above device.

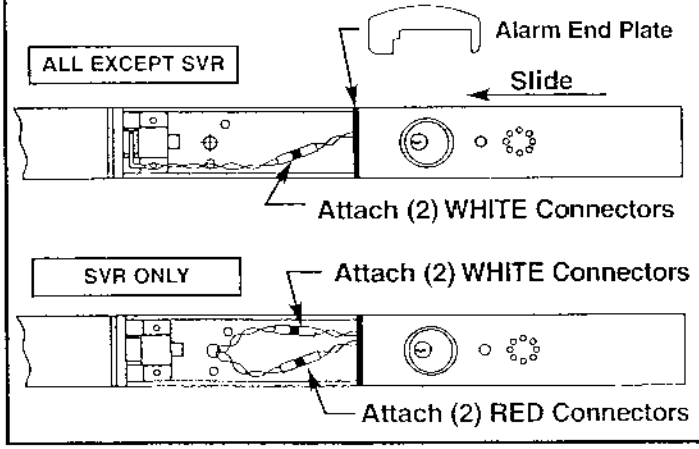

ALARM FUNCTION AS SHIPPED

1) Upon arming, LED will flash **AMBER** and device will allow egress without triggering alarm for 7 seconds. **Time Delay** is factory preset - see Table 1.
2) After 7 seconds, alarm will chirp one time and device will be **ARMED**. The LED will flash **RED** every 30 seconds, indicating device is **ARMED.**
3) Once device is **ARMED**, egress will result in an alarm sound that will stop only when device is **RE-ARMED** by key.
4) **Low Battery Indicator** - Alarm will chirp every 30 seconds, indicating battery needs to be replaced.

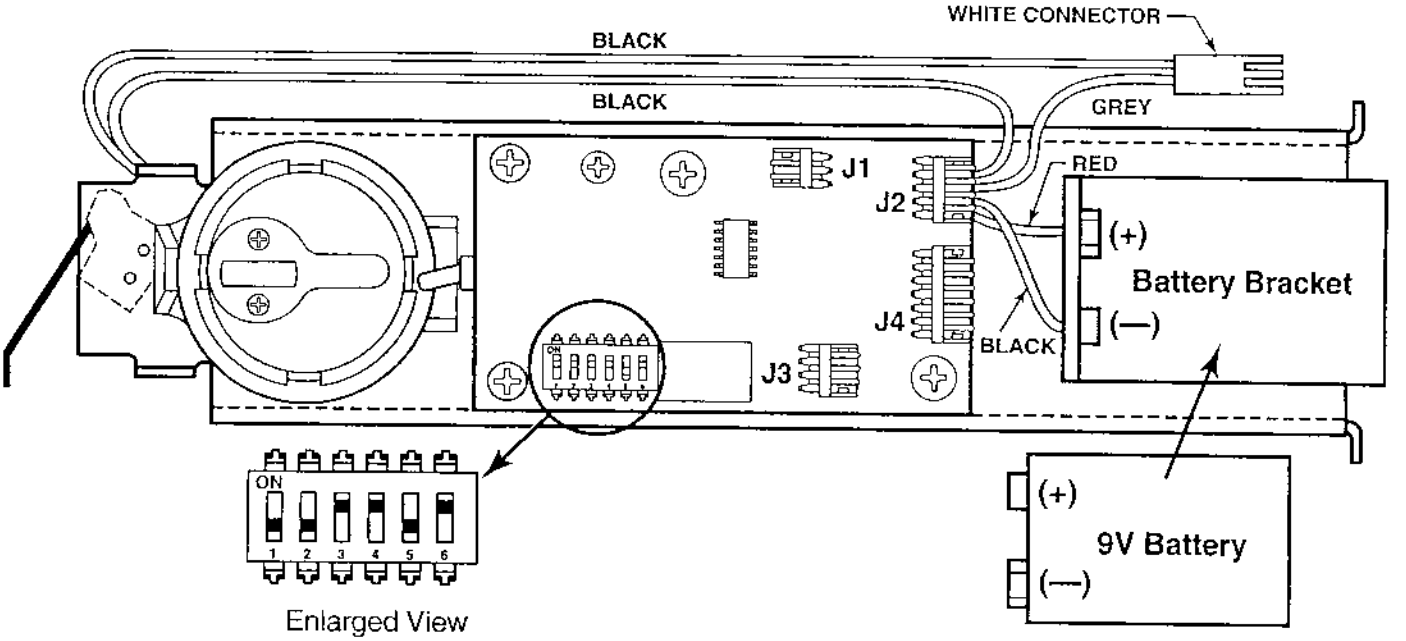

Enlarged View
Dip Switch Settings

Battery plugs in place with polarity connected as shown

NOTES:

- Alarm PC Board has Dip Switches DS-1, 2, 3, 4, and 5 factory preset per Tables 1, 2, and 3 shown below.
- Dip Switch DS-6 is for "hard wire" configurations and setting does not affect stand-alone battery operation.

Passage Time Delay

When the device is initially **ARMED** by key, the **LED** will flash **AMBER** and allow egress for a time defined in Table 1.

TABLE 1

DS-1	DS-2	Time Delay
*Off	*Off	7 Seconds
Off	On	10 Seconds
On	Off	15 Seconds
On	On	20 Seconds

Automatic Alarm Reset

The alarm can be set so that it will reset itself after a violation has occurred per Table 2. If the device automatically resets, the indicator light will flash **GREEN** every 30 seconds instead of **RED** to indicate a violation has occurred.

TABLE 2

DS-3	DS-4	Reset Time
Off	Off	2 Minutes
Off	On	5 Minutes
On	Off	10 Minutes
*On	*On	No Auto Reset

Armed and Violation LED Color Selection

Device is shipped standard, per Table 3, so that **RED LED** flashes every 30 seconds when device is **ARMED**, and flashes **GREEN** every 30 seconds under auto reset, when door has been violated.

TABLE 3

DS-5	Armed LED Color	Armed Violation LED Color
*Off	Red	Green
On	Green	Red

* Factory Preset

TROUBLESHOOTING

Problem	Solution
• Alarm will not sound	• Battery is not connected. • Battery needs replacing • Alarm is not ARMED. Turn key clockwise.
• Alarm sounds when keyswitch is activated.	• Touchbar Switch is not installed correctly. Verify that switch opens when Touchbar is depressed, and closes when Touchbar is released. Position switch lever as necessary. • Tamper Switch is not closing when Alarm End Cover is installed. Make sure cover is installed completely. • Touchbar is bound and not traveling smoothly. Check by pulling on Touchbar and arming. • J2 connector not installed, or loose.
• Alarm chirps every 30 seconds.	• Low battery indicator, replace battery.
• ARMED indicator LED, wrong color.	• Change position of DS-5 Dip Switch. "OFF" for RED ARMED indicator. "ON" for GREEN ARMED indicator.

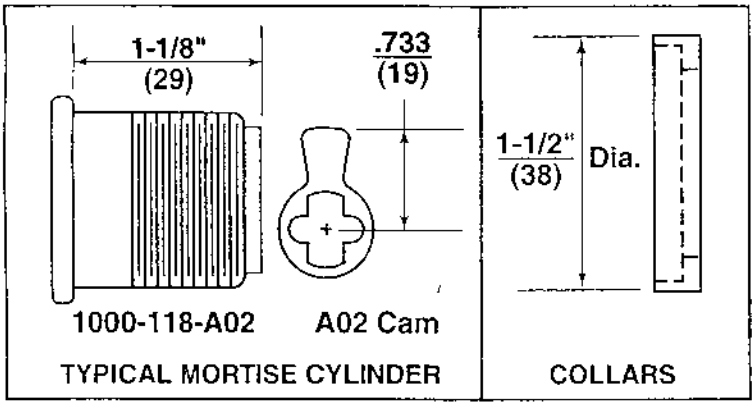

CYLINDERS AND COLLARS

Use standard 1-1/8" Mortise Cylinder with A02 Cam, Corbin Russwin number 1000-118-A02.
Collar is not required.
Use Corbin Russwin Collars specified in chart for optional 1-1/4" and 1-1/2" long Cylinders.

CYLINDER LENGTH	1-1/8" (29)	1-1/4" (32)	1-1/2" (38)
COLLAR	NONE	270F15	654F07

Dimensions are shown in inches (mm).

Corbin Russwin is a registered trademark of Corbin Russwin, Inc. Other product brand names may be trademarks or registered trademarks of their respective owners and are mentioned for reference purposes only. These materials are protected under U.S. copyright laws. All contents current at time of publication. Corbin Russwin Inc. reserves the right to change availability of any item in this manual, it's design, construction, and/or it's material.

Copyright © 2003 Corbin Russwin, Inc., all rights reserved.

Corbin Russwin®

In U.S.: Corbin Russwin, Inc.,
225 Episcopal Road
Berlin, CT 06037
Phone: 860-225-7411
Fax: 800-659-7293
www.corbin-russwin.com

In Canada: Yale-Corbin Canada LTD.,
6940 Edwards Boulevard,
Mississauga, ONT, L5T 2W2
Phone: 800-461-3007 / 905-564-5854
Fax: 800-461-8989 / 905-564-8182
www.yalecorbin.on.ca