ED5200S(A) Series
ED5200S(A) Series x M107 Windstorm Series
SecureBolt® Exit Device

Installation Instructions

FM532 3/11

(Single Doors or Pairs with Mullion)

In U.S.:
Corbin Russwin, Inc.
225 Episcopal Road
Berlin, CT 06037 USA
www.corbinrusswin.com

Technical Product Support:
Phone: 888-607-5703
Fax: 860-828-7277

In Canada:
ASSA ABLOY
Door Security Solutions Canada
160 Four Valley Drive
Vaughan, Ontario, Canada L4K 4T9
www.assaabloy.ca

For Doors of Either Hand

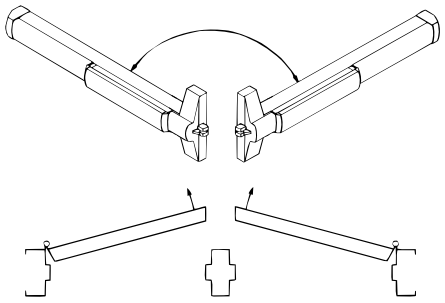

Outside Trim

Device is packed ready for any compatible trim.

Dogging

Feature to hold bolts retracted and touchpad depressed, for push-pull door operation.

To Dog Device

1. **Insert dogging key.**
2. **Hold touchbar depressed.**
3. **Turn key 1/4 turn clockwise.**

(Not a feature of fire labeled devices.)

Maintenance

1. Periodically remove covers and coat mechanisms with an appropriate lubricant. This is particularly required in corrosive environment for proper product function.
2. Check mounting fasteners periodically. Retighten if found loose. Apply screw locking compound, or change part fasteners if screws continue to back out.
3. Periodic checks and adjustments of strike are required to compensate for changes in the opening (e.g.: door sagging, etc...).

ED5200S: Panic Label
ED5200SA: Fire Label
ED5200S(A) x M107: Windstorm Label

Packed for Reinforced Metal Doors, Optional Sex Nuts Required for Composite, Wood and Unreinforced Metal Doors.

Note: These installation instructions cover only standard products. To install options use installation instructions packed with optional component, or contact the factory.

Abbreviation	Fastener Description
PPH "AB" SMS	Phillips pan head type "AB" sheet metal screw
PFHUMS	Phillips flat head under cut machine screw
PFHMS	Phillips flat head machine screw
PRH "AB" SMS	Phillips round head type "AB" sheet metal screw
PTH "AB" SMS	Phillips truss head type "AB" sheet metal screw
PPHMS	Phillips pan head machine screw
PFH "AB" SMS	Phillips flat head type "AB" sheet metal screw

Corbin Russwin

ASSA ABLOY

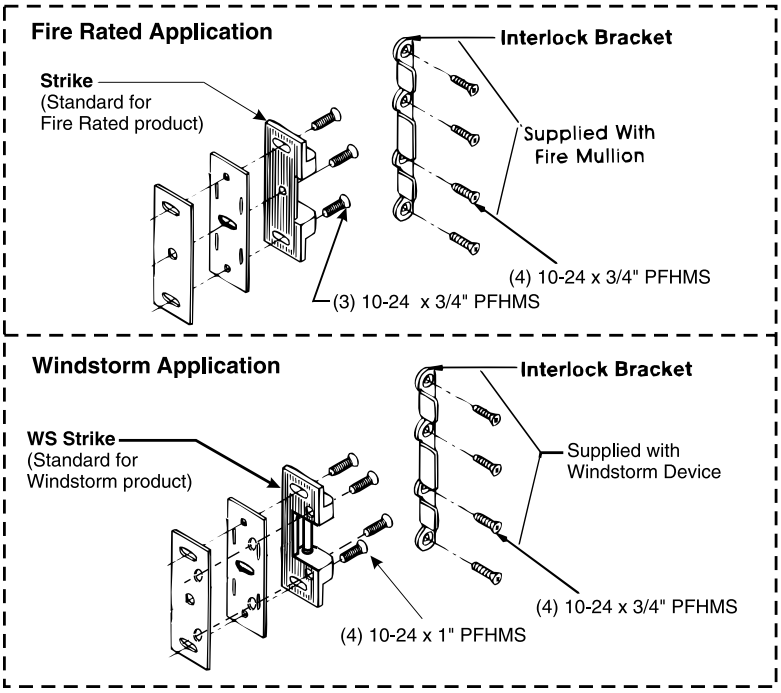

Windstorm Shim Kit*
Part Number: 710F468 Black Finish
Kit consists of (3) Latch Head Shims, (3) End Cap Shims, longer fasteners and longer Spindle Assembly for trim. Each Shim is 1/8" (3) thick. **Note:** Shim Kit required for Windstorm application.

*Standard with ED5200S(A) x M107 Windstorm Devices

Shim Kit Option (Raised Glass)
Part Number: 697F338 Black Finish
Kit consists of (2) Latch Head Shims, (2) End Cap shims, longer fasteners, and longer Spindle Assembly for trim. Each Shim is 1/8" (3) thick. More than two shim thicknesses will require longer device mounting screws.

Sex Nut Option

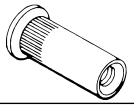

Standard for Fire Rated Doors. Recommended for Unreinforced Metal Doors and Wood Door applications.

Device	Quantity	Size
All (No Trim)	6	1/4-20
All (With Trim)	2	
Fire Mullion (Add)	4	10-24

Check Before Starting

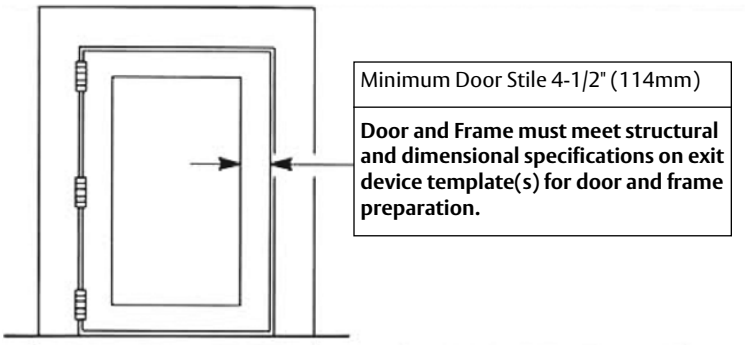

Minimum Door Stile 4-1/2" (114mm)
Door and Frame must meet structural and dimensional specifications on exit device template(s) for door and frame preparation.

Unreinforced Door or Frames
Doors and Frames with walls having a structural thickness (metal skin plus reinforcement, or solid hardwood) to engage less than (3) full screw threads, are considered unreinforced for hardware.
Unreinforced Doors: Use SNB (sex nuts and bolts).
Unreinforced Frames: Use Blind Rivet Nuts.
Recommended fasteners for unreinforced openings are not necessarily supplied by Corbin Russwin, Inc.

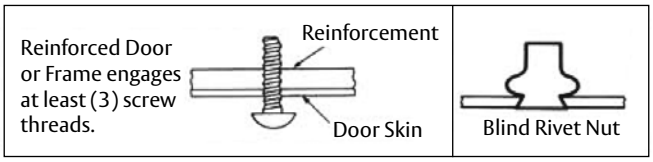

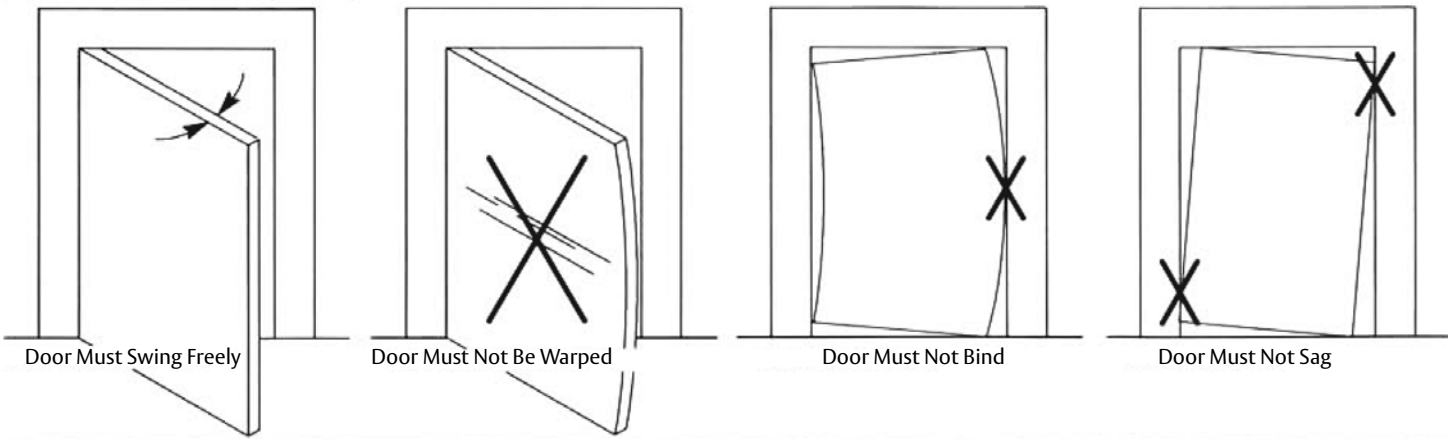

All dimensions are in inches (mm) unless otherwise noted.

Corbin Russwin

ASSA ABLOY

1. Mark Door

Locate and Mark Horizontal and Vertical Reference Centerlines, as shown.

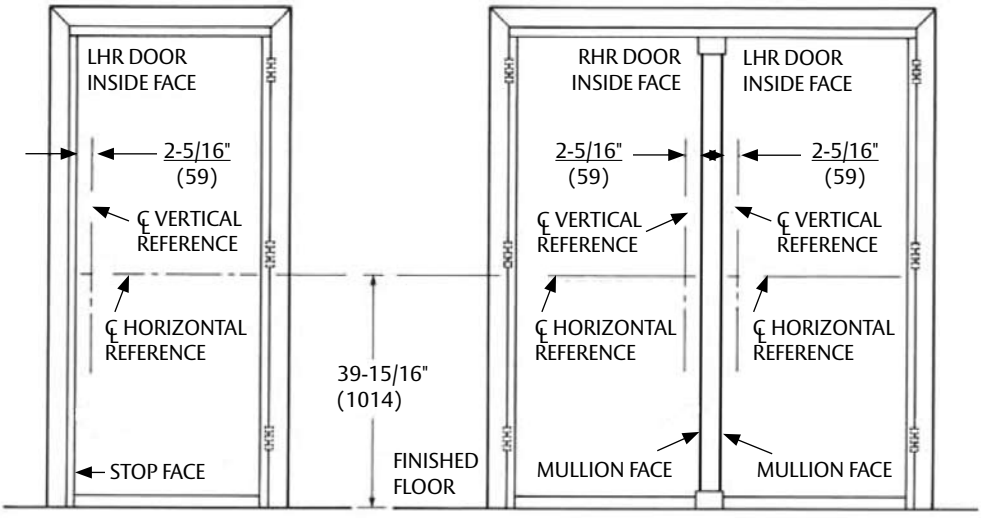

Typical Single Swing

Pair with Mullion

2. Prepare Door & Frame

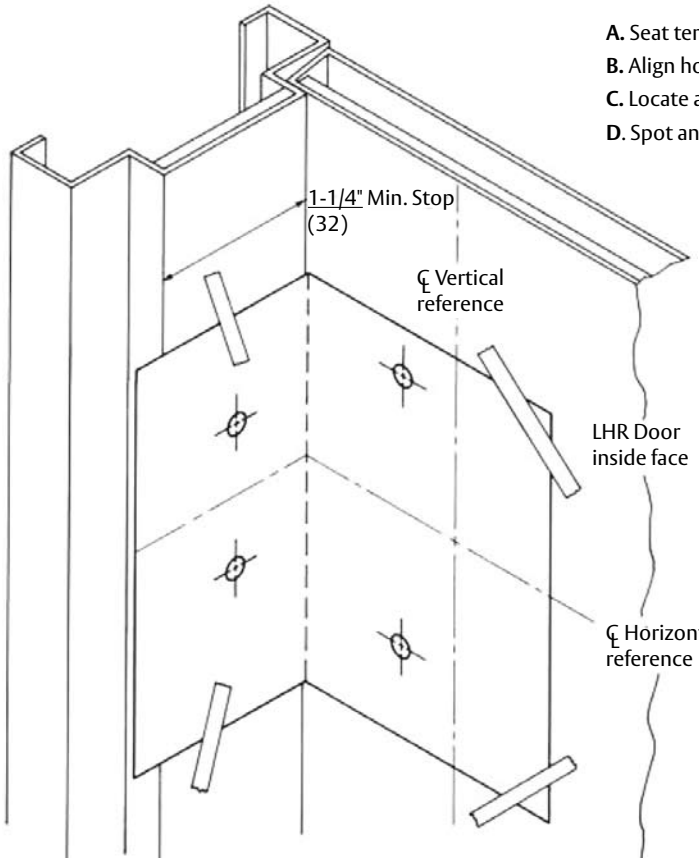

A. Seat template on door and stop faces.

B. Align horizontal and vertical centerlines. Tape Template in place.

C. Locate and tape Trim Template to door. (See instructions packed with Trim)

D. Spot and prepare holes. (See caution below).

Device: (2) 1/4"-20 Machine Screws (*), or
(2) 3/8" Dia. Sex Nuts & Bolts
(10)

Strike: (2) 10-24 Machine Screws, or
(2) #10 Wood Screws

(*) **Metal reinforced doors only.**

Caution: The use of Shims (ie...Raised Glass or Windstorm) requires shifting location of Strike away from the door. (See Door Marker Template for details).

Corbin Russwin

ASSA ABLOY

3. Size Device

Device must be field cut to size, unless standard opening and device are 36" (0.91m).

LHR DOOR OPEN 90°
INSIDE FACE

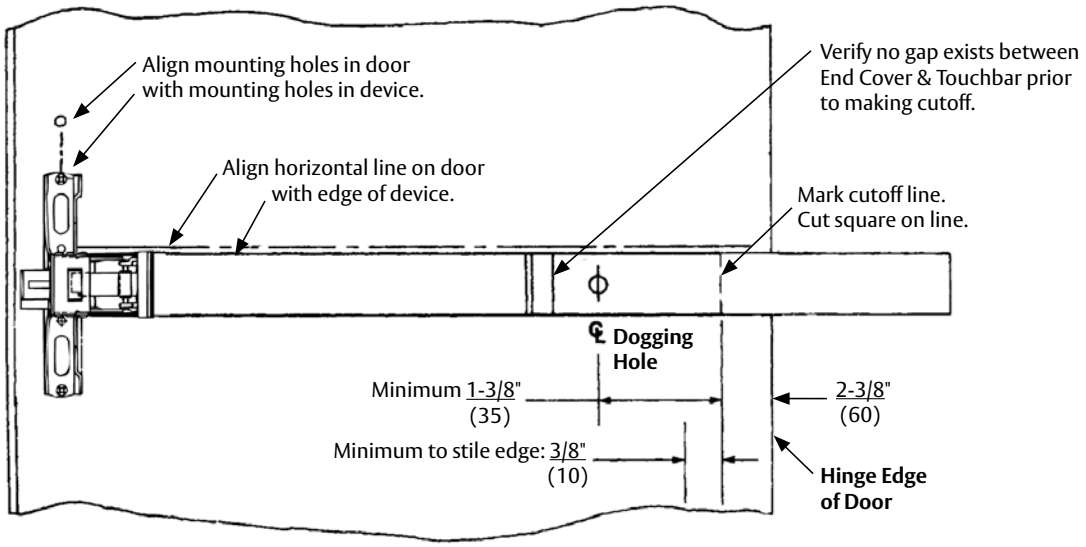

4. Clear Raised Door Molding

Device must seat flush on door surface, or on shims that keep it parallel to door face.

One shim Kit 697F338 required for each 1/4" (6mm) of device lift needed. Longer device mounting screws needed when more than (1) shim kits are used. See "Shim Kits Option" on front page.

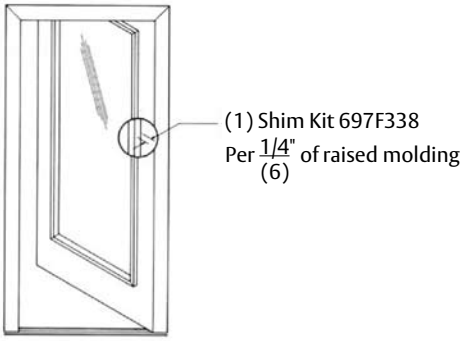

5. Install Device

A. Mount Trim (Follow instructions packed with trim).

B. Seat Bar in Place. Fasten Device Head (2) 1/4-20 x 1" PPHMS or SNB.

C. Set Bar Level. Locate End Clamp Holes.

D. Prepare End Clamp Mounting Holes. Mount End Clamp using (2) 1/4-20 x 1" PPHMS or SNB.

E. Check Bolt Retraction.

1. Depress touchbar (bolt must retract). Release touchbar (bolts must extend).
2. Actuate trim (bolts must retract). Release trim actuator (bolts must extend).
3. (NOT FOR FIRE DEVICES). Depress touchbar, turn dogging key clockwise (bar must remain depressed, bolts must remain retracted). Turn dogging key counterclockwise (bar and bolts must return to extended position).

NOTE: When resulting operation is faulty, check first for visible binding or interference. If there is no apparent reason for the fault, remove item from the door and recheck its operation before assuming that it is defective.

F. Tighten All Mounting Screws.

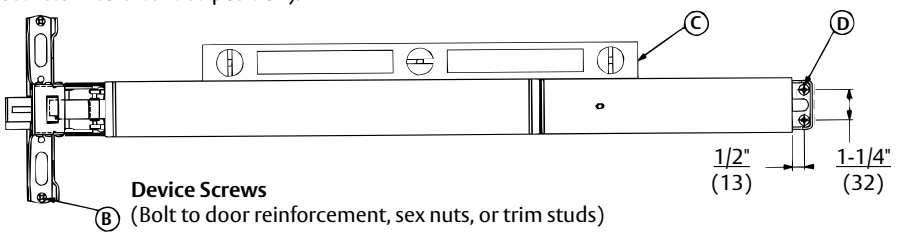

6. Install Strike

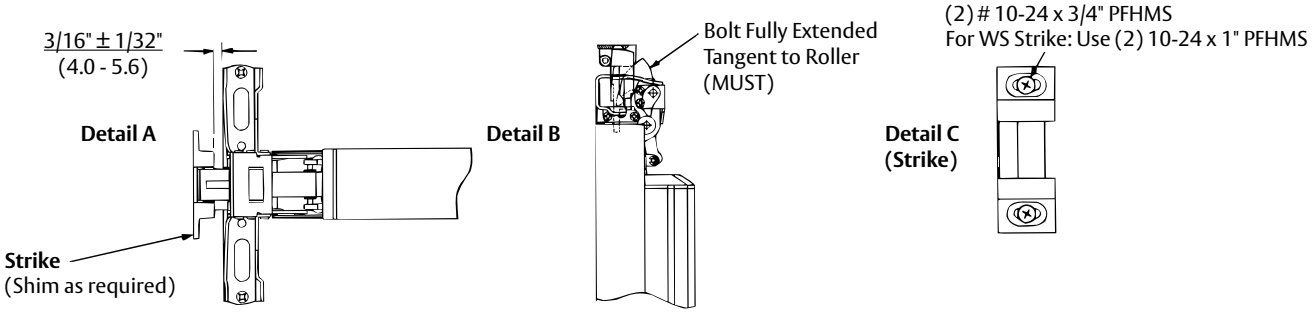

A. Position Strike Projection (Strike + Locking Plate + Shims, if needed). See Detail A.

B. Position Strike Depth. See Detail B.

C. Fasten Strike Securely, as shown on Detail C using (2) 10-24 x 3/4" PFHMS. For WS Strike, use (2) 10-24 x 1" PFHMS.

D. Check Bolt Engagement.

1. Bolt should retract to clear the strike, when actuated by bar, trim, or dogging action.
   Bolt should consistently re-engage the strike, when actuators are released and the door shuts.
2. Door should remain latched and not rattle when pushed, pulled, or shaken in/out.

E. Lock strike into place. For regular and Fire application, See Detail E1. For Windstorm application See Detail E2.

1. Strike Application: Spot and prepare (1) hole using the strike as a template, and install strike center screw (1) 10-24 x 3/4" PFHMS.
2. Windstorm Strike Application: Spot and prepare (2) holes using the strike as a template, drill through the strike shims and locking plate (when required), then install (2) 10-24 x 1" PFHMS strike locking screws.

F. Install Interlock Bracket (Fire Mullion). See Detail F.

1. Position strike Interlock Bracket in place, as shown. Locate bracket holes.
2. Prepare Interlock Bracket mounting holes. Mount Interlock Bracket using (4) 10-24 x 1" PFHMS or SNB).

Note: Interlock Bracket and screws supplied with Fire Mullion.

G. Install Interlock Bracket (Windstorm Device). See Detail F.

1. Position strike Interlock Bracket in place, as shown. Locate bracket holes.
2. Prepare Interlock Bracket mounting holes. Mount Interlock Bracket using (4) 10-24 x 1" PFHMS or SNB).

Note: Interlock Bracket and screws supplied with Windstorm Product supersedes interlock bracket supplied with Fire Mullion (remove and discard when applicable).

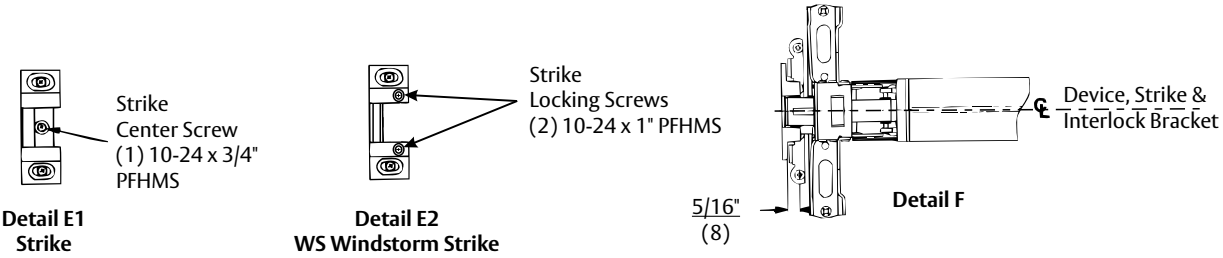

7. Install Head Cover & End Cap

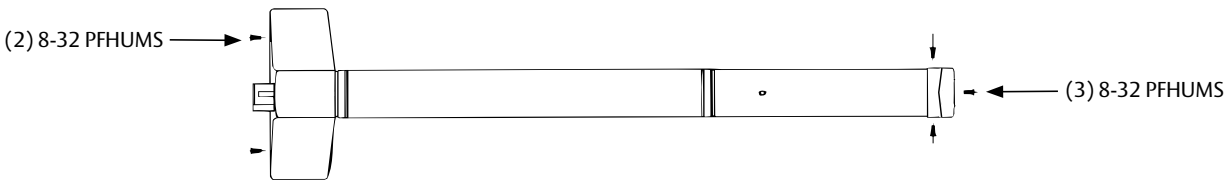

Corbin Russwin

ASSA ABLOY

Plastic Template Instructions

For use in conjunction with instruction sheets and door marker templates packed with exit device. Holes and slots are identified below by exit device series and trim. Prep door and frame for only those features required for the exit device being installed.

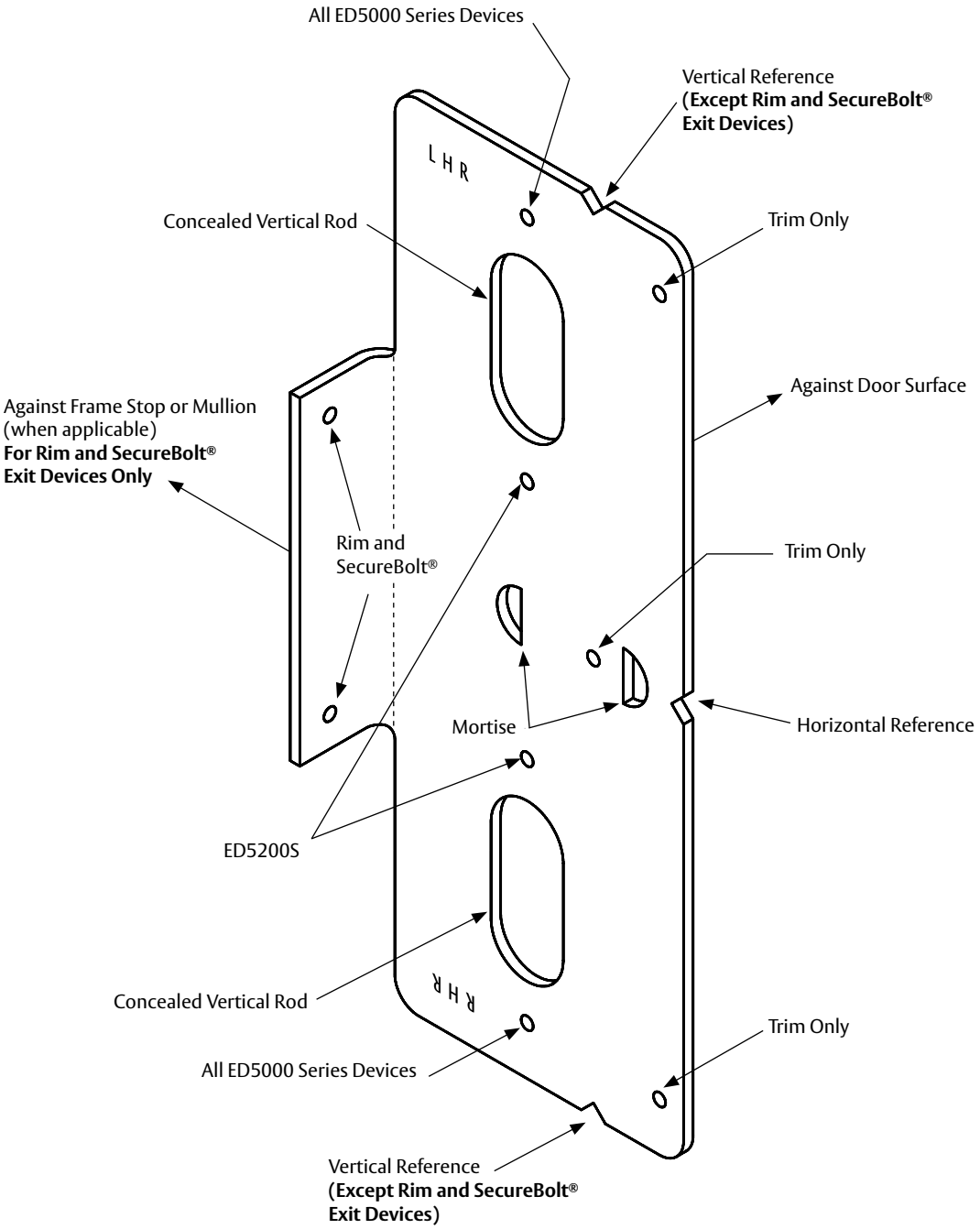

Corbin Russwin

ASSA ABLOY

Notes

Corbin Russwin

ASSA ABLOY

ASSA ABLOY is the global leader in door opening solutions, dedicated to satisfying end-user needs for security, safety and convenience.

Copyright © 2005, 2010, 2011 Corbin Russwin, Inc., an ASSA ABLOY Group company. All rights reserved. Reproduction in whole or in part without the express written permission of Corbin Russwin, Inc. is prohibited.