VT9 Series
Anti-Vandal Pull Trim

Installation Instructions FM 319 8/09 (617419120)
(for use with ED5000 Series Exit Devices)

Corbin Russwin

ASSA ABLOY

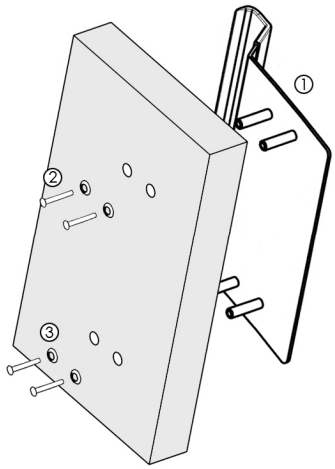

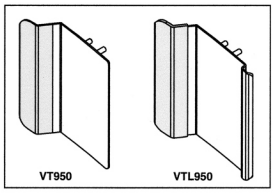

1	Anti-Vandal Pull	1
2	Fastener	4
3	Cup Washer	4

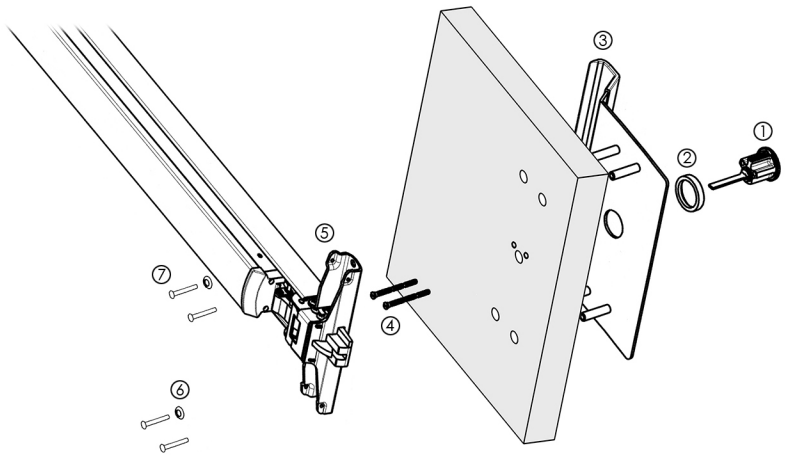

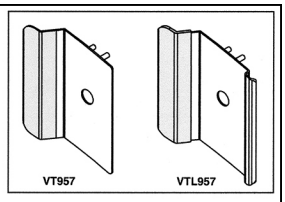

1	Cylinder	1
2	Collar	1
3	Anti-Vandal Pull	1
4	Cyl Screw	2
5	Exit Device	1
6	Cup Washer	2
7	Fastener	4

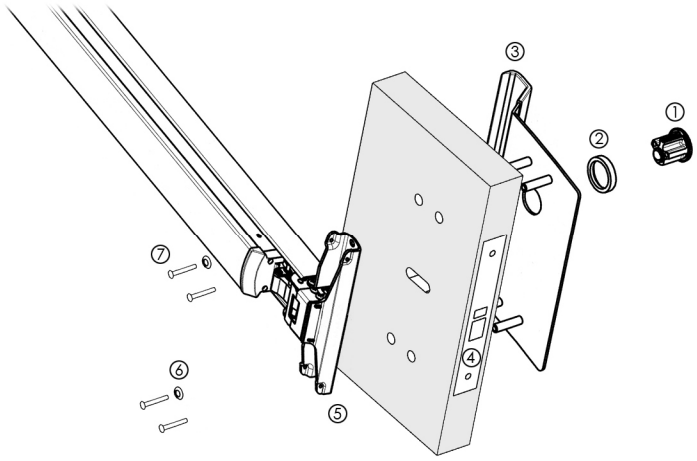

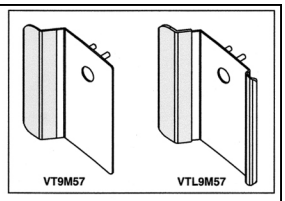

1	Cylinder	1
2	Collar	1
3	Anti-Vandal Pull	1
4	Mortise Lock	1
5	Exit Device	1
6	Cup Washer	2
7	Fastener	4

In U.S.: Corbin Russwin, Inc.
225 Episcopal Road
Berlin, CT 06037-4004
www.corbinrusswin.com

Technical Product Support:
Telephone: 888-607-5703
Fax: 800-659-7293

In Canada: ASSA ABLOY
Door Security Solutions Canada
160 Four Valley Drive
Vaughan, ON, L4K 4T9
www.assaabloy.ca

ASSA ABLOY, the global leader in door opening solutions

Copyright © 2008-2009 Corbin Russwin, Inc., an ASSA ABLOY Group company. All rights reserved.
Reproduction in whole or in part without the expressed written permission of Corbin Russwin, Inc. is prohibited.