Installation Instructions

Mortise Lock Occupancy Indicators
(with cylinder)

FM299 06/08 (617417990)

Corbin Russwin®

ASSA ABLOY

STEP 1
Mark holes using door marker (FM298)

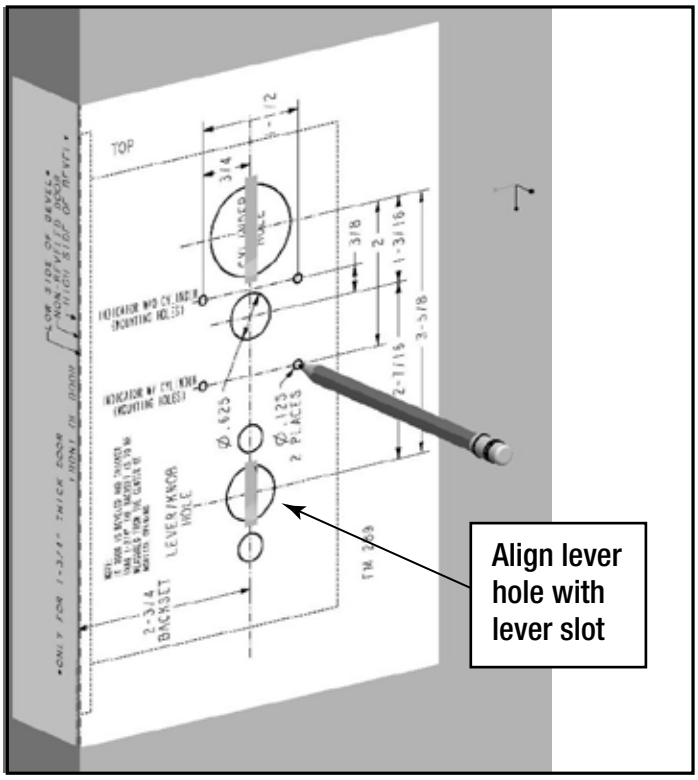

STEP 2
Drill two .125” diameter holes
(where marked, thru one side of door)

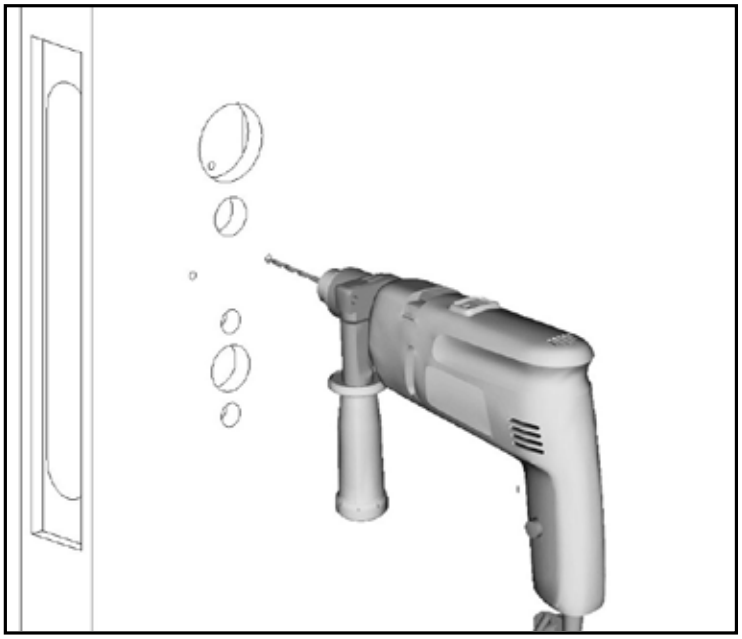

NOTE: When installing, make sure lock is unlocked, deadbolt is retracted and indicator shows green window (unsecure / vacant)

STEP 3
Install lock, then screw indicator onto door.

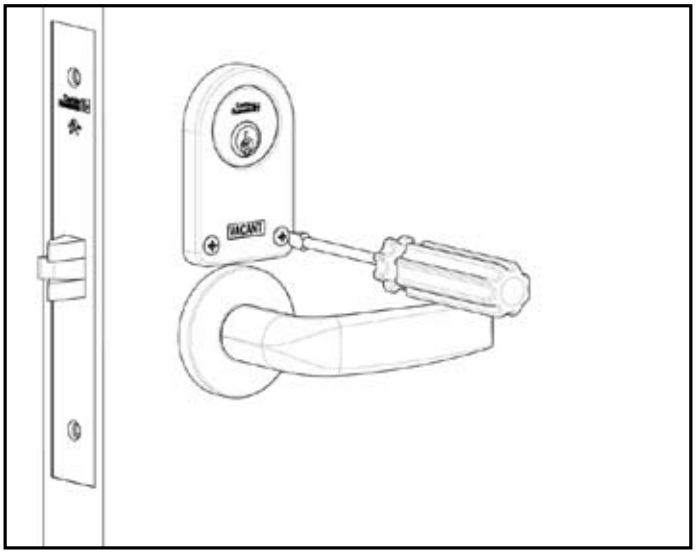

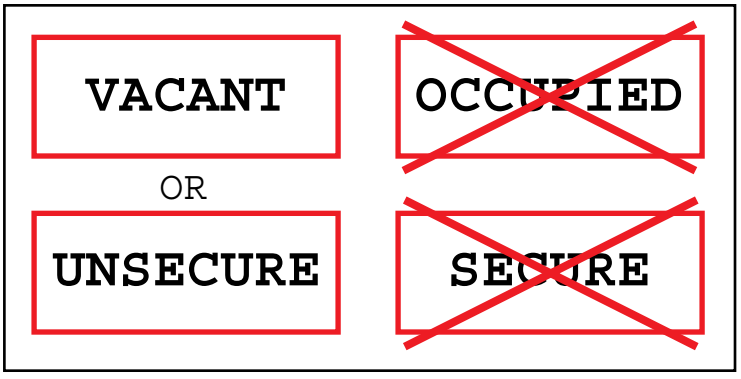

Copyright © 2008 Corbin Russwin, Inc., an ASSA ABLOY Group company. All rights reserved. Reproduction in whole or in part without the express written permission of Corbin Russwin, Inc. is prohibited.

In U.S.: Corbin Russwin, Inc.
225 Episcopal Road
Berlin, CT 06037-4004
www.corbinrusswin.com

Technical Product Support:
Phone: 888-607-5703 Fax: 800-659-7293

In Canada: ASSA ABLOY DSS Canada
160 Four Valley Drive
Vaughan, ON, L4K 4T9
www.assaabloycanadadss.ca