Installation Instructions

Mortise Lock Occupancy Indicators
(without cylinder)

FM289 06/08 (617417890)

STEP 1
Mark holes using door marker (FM298)

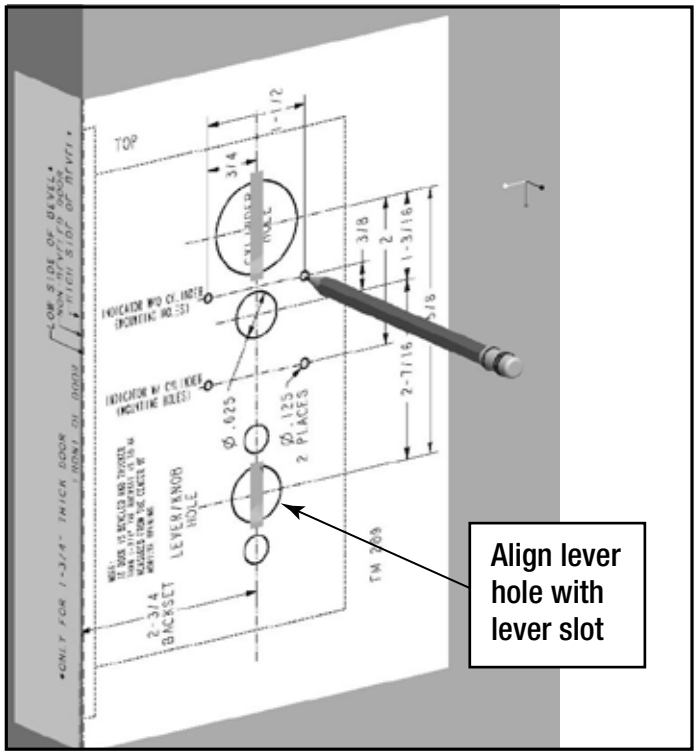

STEP 2
Drill two .125” diameter holes
(where marked, thru inside door surface)

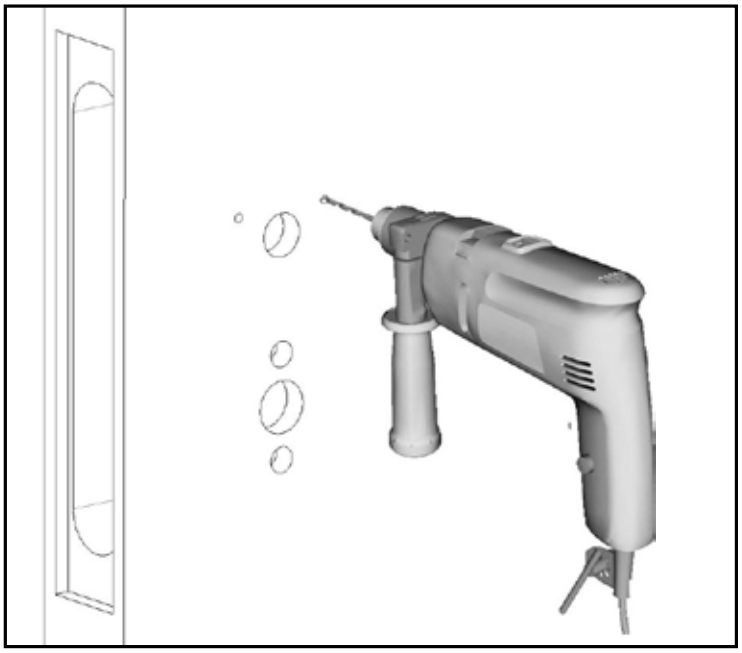

NOTE: **When installing, make sure lock is unlocked, deadbolt is retracted and indicator shows green window (unsecure / vacant)**

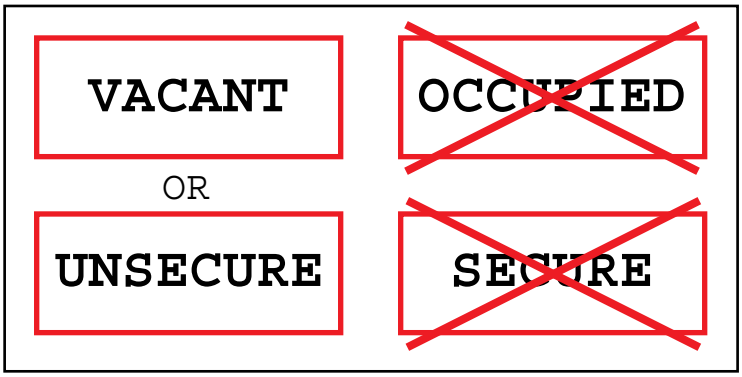

STEP 3
Install lock, then screw indicator onto door.

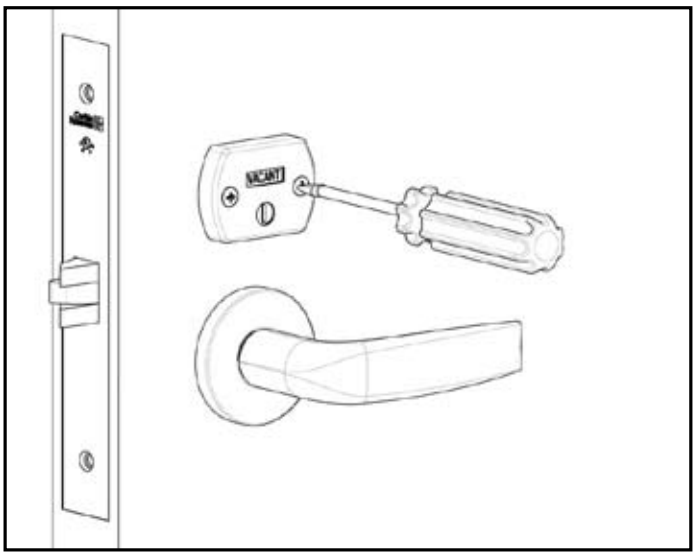

ASSA ABLOY is the global leader in door opening solutions, dedicated to satisfying end-user needs for security, safety and convenience.

Copyright © 2008 Corbin Russwin, Inc., All rights reserved.
Reproduction in whole or part without the express written permission of Corbin Russwin, Inc. is prohibited.