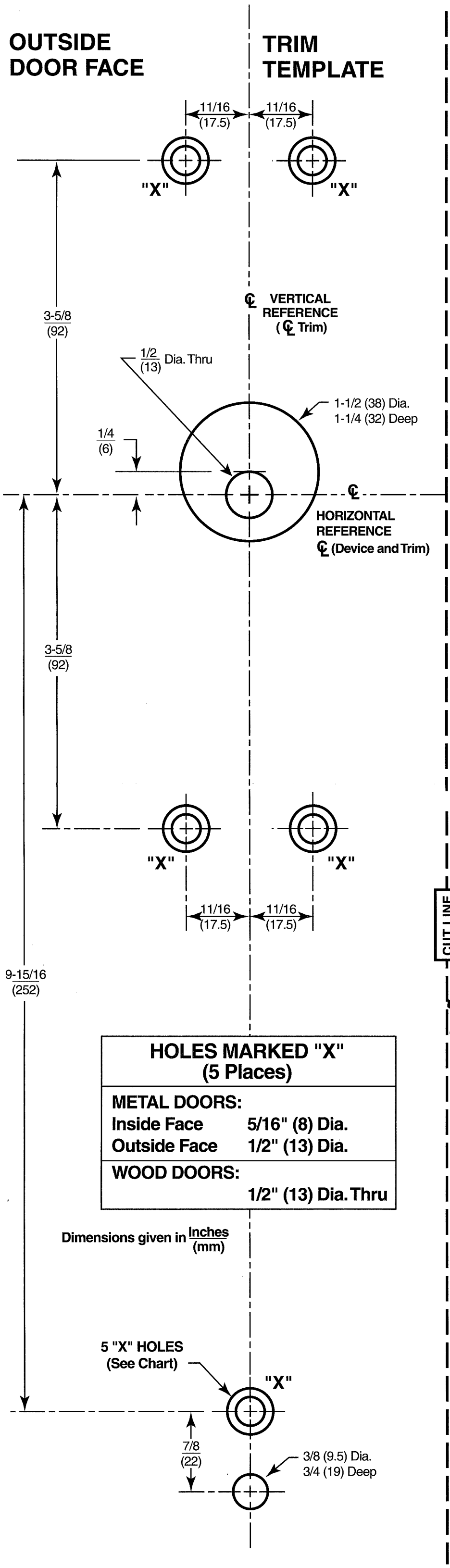

CUT LINE

Installation Instructions

1. Assemble trim. See other side for components and instructions.
2. After marking door inside face for device location (Device Instructions), transfer "Vertical Reference Centerline" from inside to outside door face. Follow steps 2a. and 2b. below.

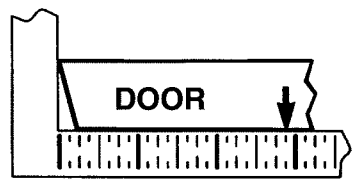

2a. **MEASURE INSIDE LINE LOCATION.**

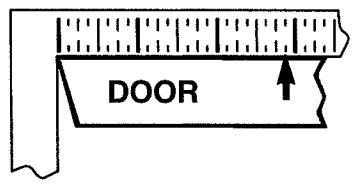

2b. **TRANSFER DIMENSION TO OUTSIDE FACE.**

3. Transfer "Horizontal Reference Centerline" from inside to outside door face.
4. Align trim template and tape to outside door face.
   CAUTION: Office copiers and facsimile machines may change the size of a drawing and make the template inaccurate to use as a door marker. If this is not the original template packed with the trim, use only the dimensions written on the template to locate the holes on the door (do not use the template as a door marker).
5. Spot holes and prepare door for trim.
6. Mount trim to door thru holes "B". Fasten, finger tight only, with 3 screws and washers seating on door, as shown in Figure 1. Bottom screw and washer engages lower post on pull.
7. Cut cylinder tailpiece as shown in Figure 2.
8. Seat device so that cylinder tailpiece engages cam slot, as shown in Figure 1. Continue as shown in device instructions.

Figure 1

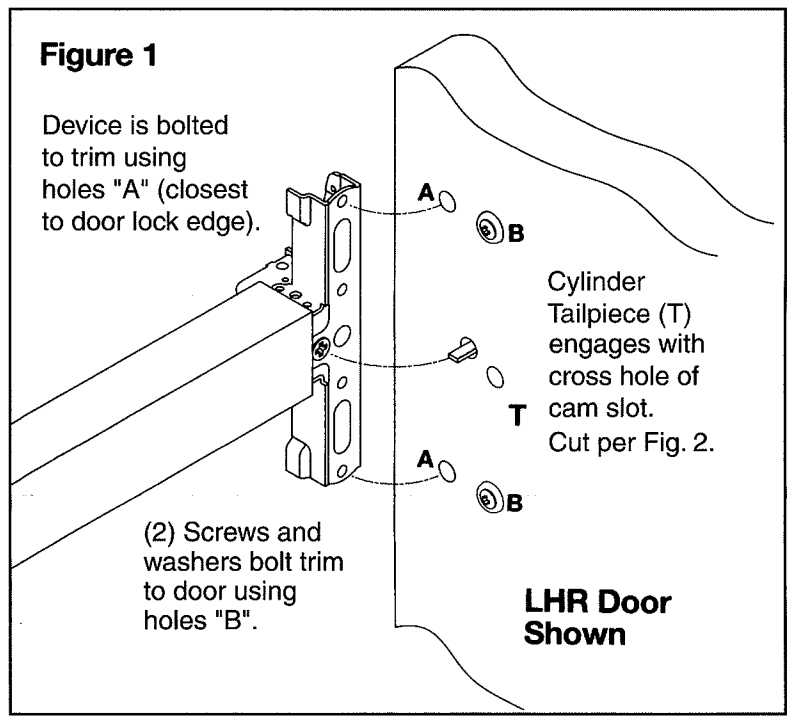

Figure 2

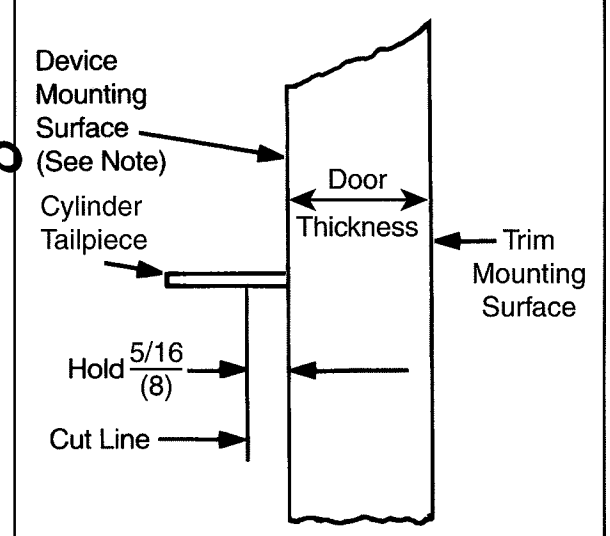

NOTE: Measure from device mounting surface (door face or shim surface).

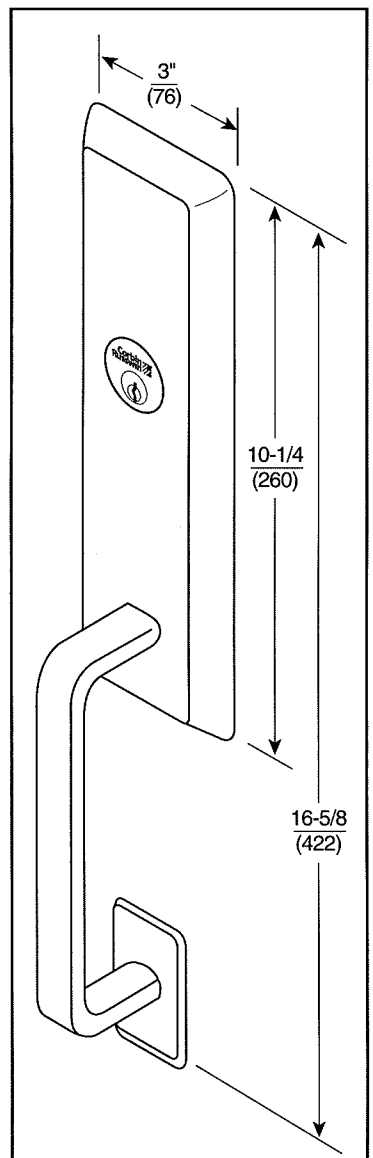

TH957 Nightlatch Function

Corbin Russwin

TH957
Heavy Duty Thumbpiece Trim
Installation Instructions
For use with ED5000 Series Exit Device
(Metal, Wood or Composite Doors)

FM260 7/06 (617417703)

Trim Assembly Instructions

1. **Check cylinder components.**
   NOTE: Cylinders longer than 1-1/8" (29) will require collars.
   Refer to Corbin Russwin cylinder collar chart.

2. **Assemble cylinder.**
   Insert cylinder housing prongs into matching notches of escutcheon.
   Pass cylinder tailpiece thru cylinder collar (when required) and hole in cylinder housing. Fasten cylinder using (2) mounting screws.
   DO NOT OVERTIGHTEN SCREWS.

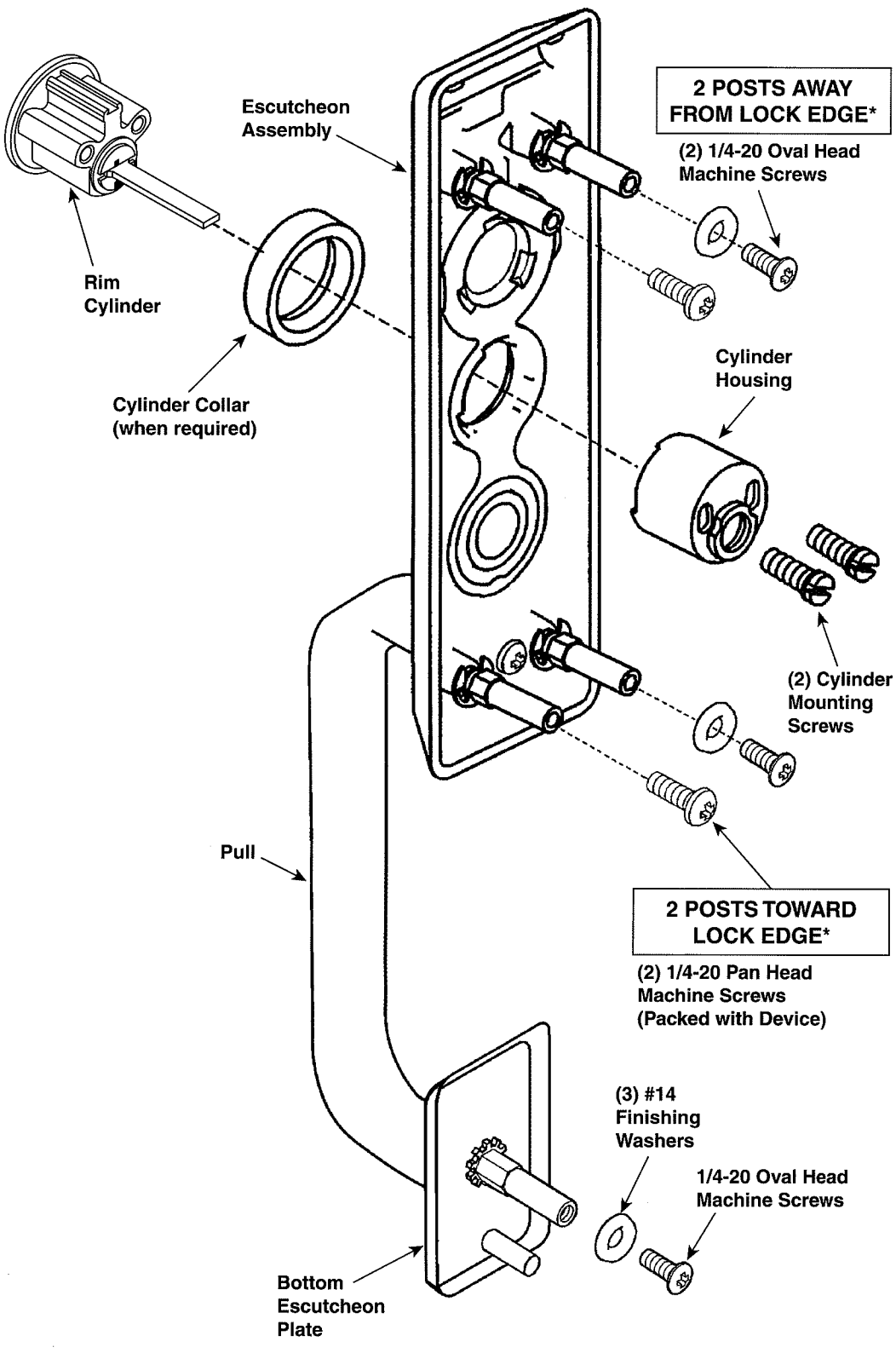

*Shown for LHR Door

Corbin Russwin Cylinder Collar Chart	
Cylinder Length	**Collar**
1-1/8" (29)	None
1-1/4" (32)	654F07**
1-1/2" (38)	654F08**

** Specify Finish

Corbin Russwin®

In U.S.: Corbin Russwin, Inc.
225 Episcopal Road
Berlin, CT 06037-4004
www.corbinrusswin.com

Technical Product Support:
Phone: 888-607-5703
Fax: 800-659-7293

In Canada: Yale-Corbin Canada LTD
6940 Edwards Boulevard
Mississauga, ONT, L5T 2W2
www.yalecorbin.on.ca

TH957
Heavy Duty Thumbpiece Trim Installation Instructions

For use with ED5000 Series Exit Device
(Metal, Wood or Composite Doors)

FM260 7/06 (617417703)