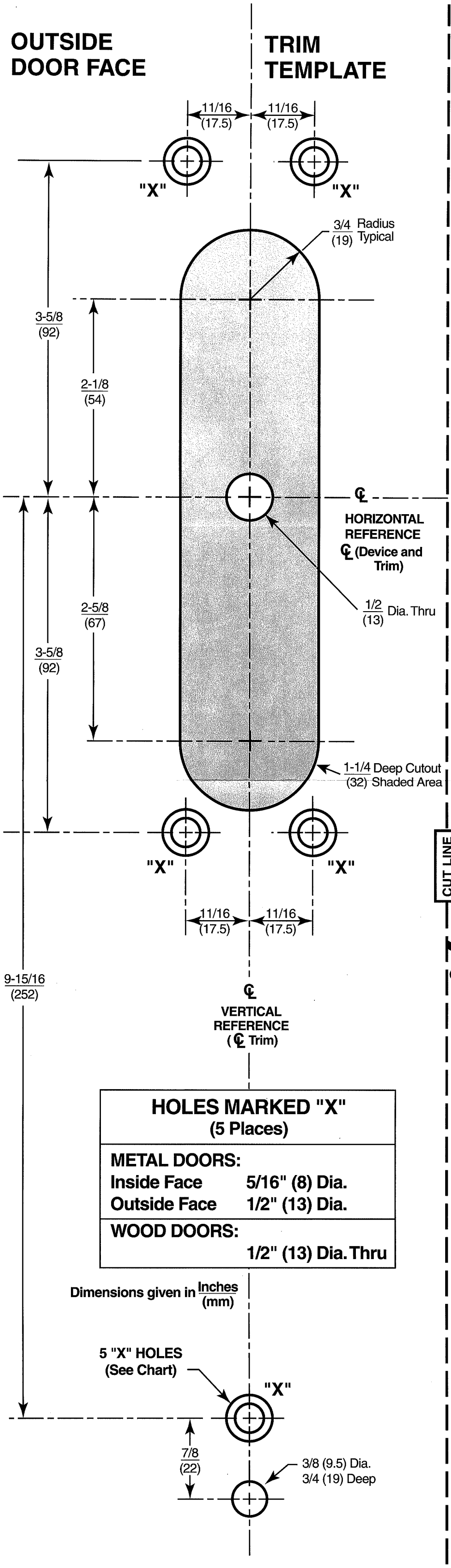

HOLES MARKED "X" (5 Places)	
METAL DOORS:	
Inside Face	5/16" (8) Dia.
Outside Face	1/2" (13) Dia.
WOOD DOORS:	
	1/2" (13) Dia. Thru

Dimensions given in Inches (mm)

Installation Instructions

1. Assemble trim. See other side for components and instructions.
2. After marking door inside face for device location (Device Instructions), transfer "Vertical Reference Centerline" from inside to outside door face. Follow steps 2a. and 2b. below.

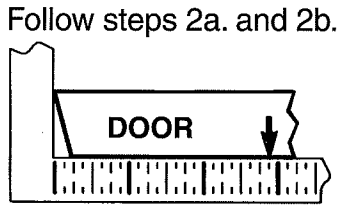

2a. **MEASURE INSIDE LINE LOCATION.**

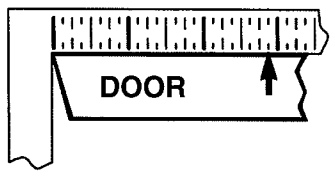

2b. **TRANSFER DIMENSION TO OUTSIDE FACE.**

3. Transfer "Horizontal Reference Centerline" from inside to outside door face.
4. Align trim template and tape to outside door face.

CAUTION: Office copiers and facsimile machines may change the size of a drawing and make the template inaccurate to use as a door marker. If this is not the original template packed with the trim, use only the dimensions written on the template to locate the holes on the door (do not use the template as a door marker).

5. Spot holes and prepare door for trim.
6. Mount trim to door thru holes "B". Fasten, finger tight only, with 3 screws and washers seating on door as shown in Figure 1. Bottom screw and washer engages lower post on pull.
7. With trim unlocked (spindle turning when thumbpiece is depressed) cut trim spindle as shown in Figure 2.
8. Seat device so that trim spindle engages vertical cam slot, as shown in Figure 1. Continue as shown in device instructions.

Figure 1

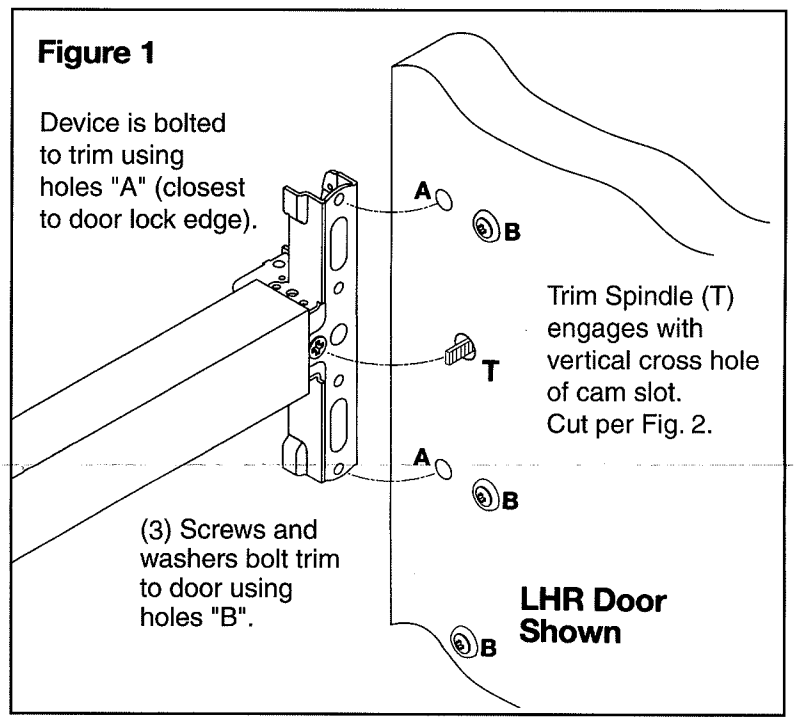

Figure 2 **Trim must be unlocked (Spindle fully extended).**

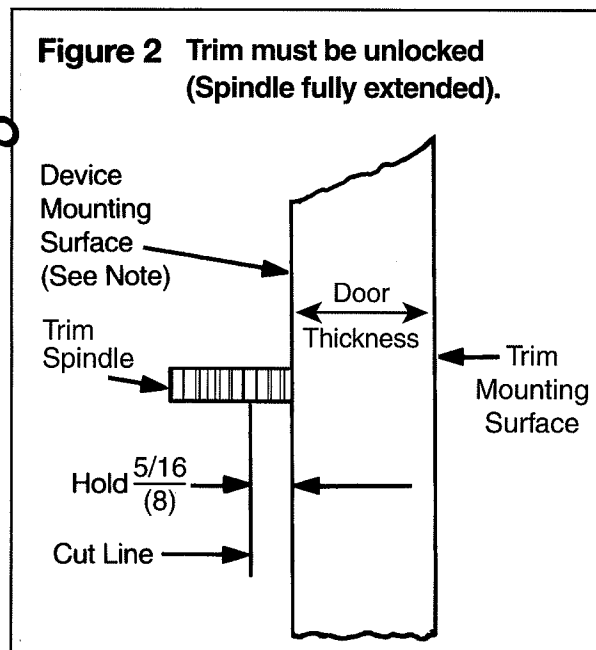

NOTE: Measure from device mounting surface (door face or shim surface).

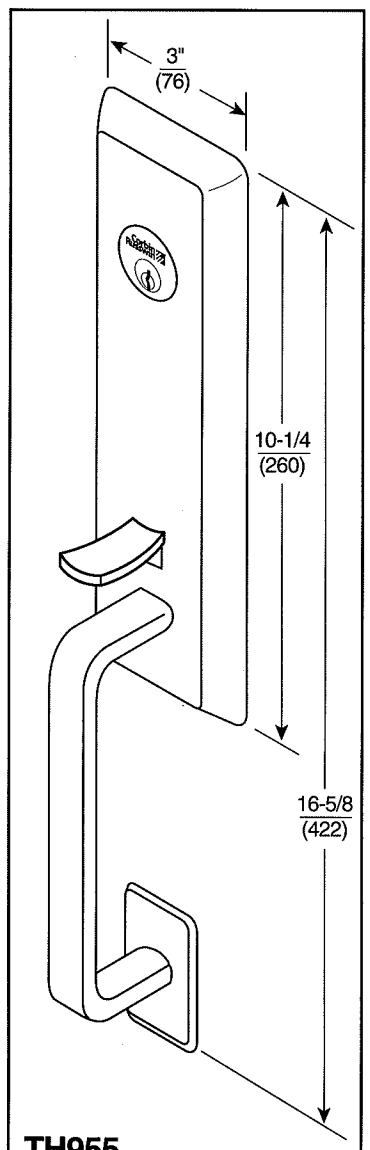

TH955
Classroom Function
TH959
Storeroom Function

Corbin Russwin

TH955 and TH959 Heavy Duty Thumbpiece Trim Installation Instructions

For use with ED5000 Series Exit Device
(Metal, Wood or Composite Doors)

FM259 7/06 (617417702)

Trim Assembly Instructions

1. **Check cylinder components.**
   NOTE: Cylinders longer than 1-1/8" (29) will require collars.
   Refer to Corbin Russwin cylinder collar chart.
2. **When required, cut cylinder tailpiece.**
   Correct length is 1/16" to 3/16" (2 to 5) beyond cylinder housing cam.
3. **Assemble cylinder.**
   Insert cylinder housing prongs into matching notches of escutcheon.
   Pass cylinder tailpiece thru cylinder collar (when required) and slot in cylinder housing cam. Fasten cylinder using (2) mounting screws.
   DO NOT OVERTIGHTEN SCREWS.
4. **Check cylinder action.**
   Rotate cylinder tailpiece to cam the clutch lever down.
   This depresses the trim spindle assembly which disengages the trim spindle from the thumbpiece, putting the trim in a free-wheeling, locked mode.
5. **Determine trim function.**
   TH955 (Classroom) – Key locks/unlock thumbpiece
   TH959 (Storeroom) – Key locks/unlocks thumbpiece
   Key removable ONLY in locked position.
6. **To change trim function:**
   Rotate cam tip to down position (locked mode).
   Move function screw as shown.

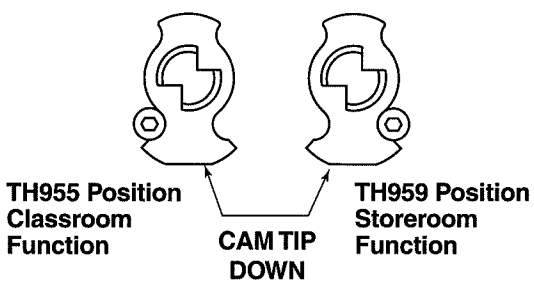

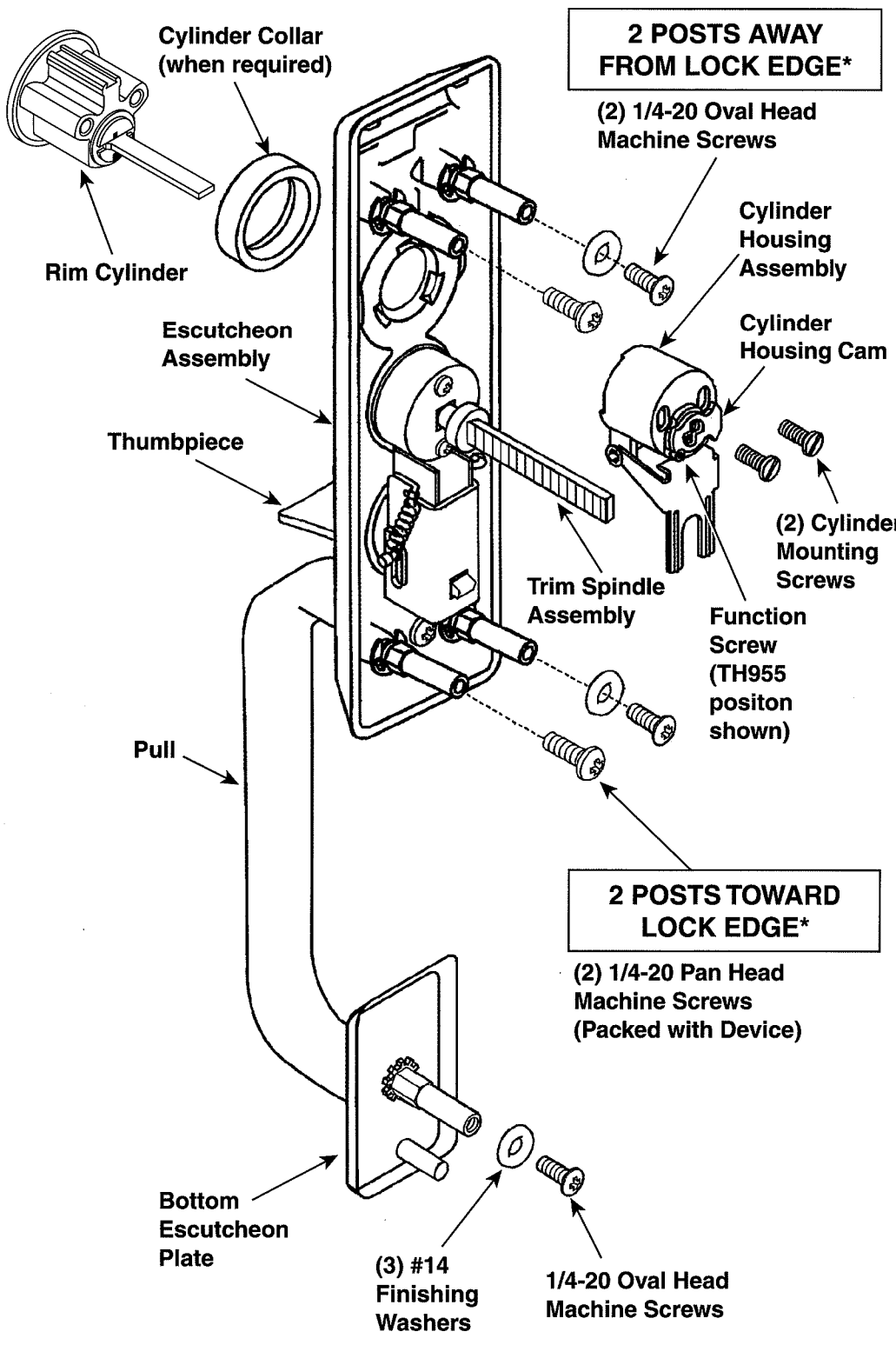

Corbin Russwin Cylinder Collar Chart	
Cylinder Length	Collar
1-1/8" (29)	None
1-1/4" (32)	654F07**
1-1/2" (38)	654F08**

** Specify Finish

*Shown for LHR Door

Corbin Russwin

In U.S.: Corbin Russwin, Inc.
225 Episcopal Road
Berlin, CT 06037-4004
www.corbinrusswin.com

Technical Product Support:
Phone: 888-607-5703
Fax: 800-659-7293

In Canada: Yale-Corbin Canada LTD
6940 Edwards Boulevard
Mississauga, ONT, L5T 2W2
www.yalecorbin.on.ca

TH955 and TH959 Heavy Duty Thumbpiece Trim Installation Instructions

For use with ED5000 Series Exit Device
(Metal, Wood or Composite Doors)

FM259 7/06 (617417702)