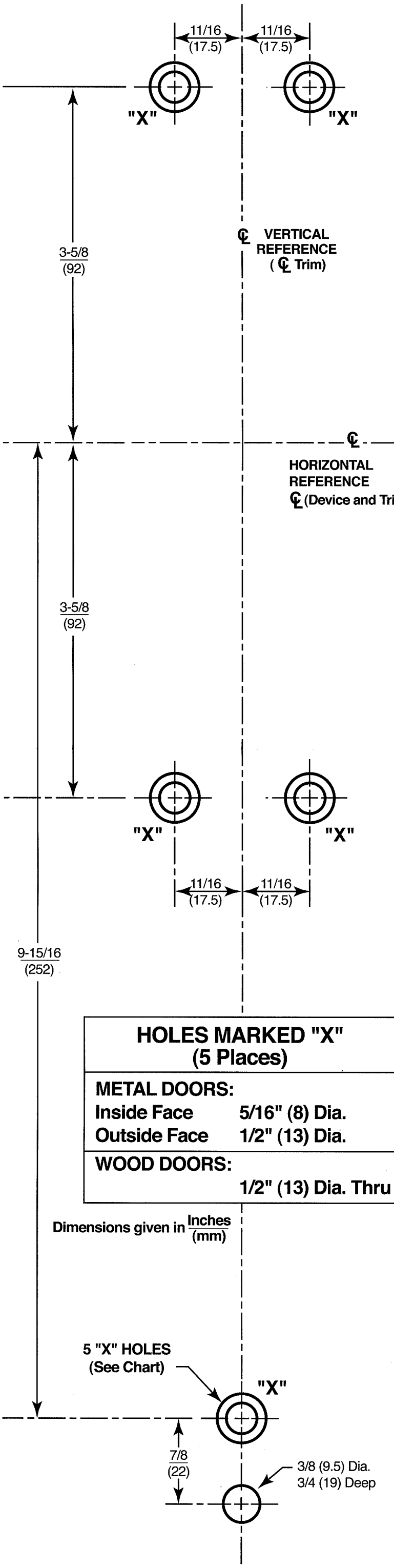

CUT LINE

Installation Instructions

1. Check box contents. See other side for components.
2. After marking door inside face for device location (Device Instructions), transfer "Vertical Reference Centerline" from inside to outside door face. Follow steps 2a and 2b below.

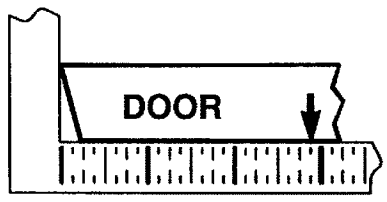

2a. **MEASURE INSIDE LINE LOCATION.**

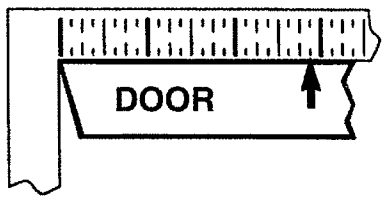

2b. **TRANSFER DIMENSION TO OUTSIDE FACE.**

3. Transfer "Horizontal Reference Centerline" from inside to outside door face.
4. Align trim template and tape to outside door face.
   CAUTION: Office copiers and facsimile machines may change the size of a drawing and make the template inaccurate to use as a door marker. If this is not the original template packed with the trim, use only the dimensions written on the template to locate the holes on the door (do not use the template as a door marker).
5. Spot holes and prepare door for trim.
6. Mount trim to door thru holes "B". Fasten, finger tight only, with 3 screws and washers seating on door, as shown in Figure 1. Bottom screw and washer engages lower post on pull.
7. Continue as shown in device instructions.

Figure 1

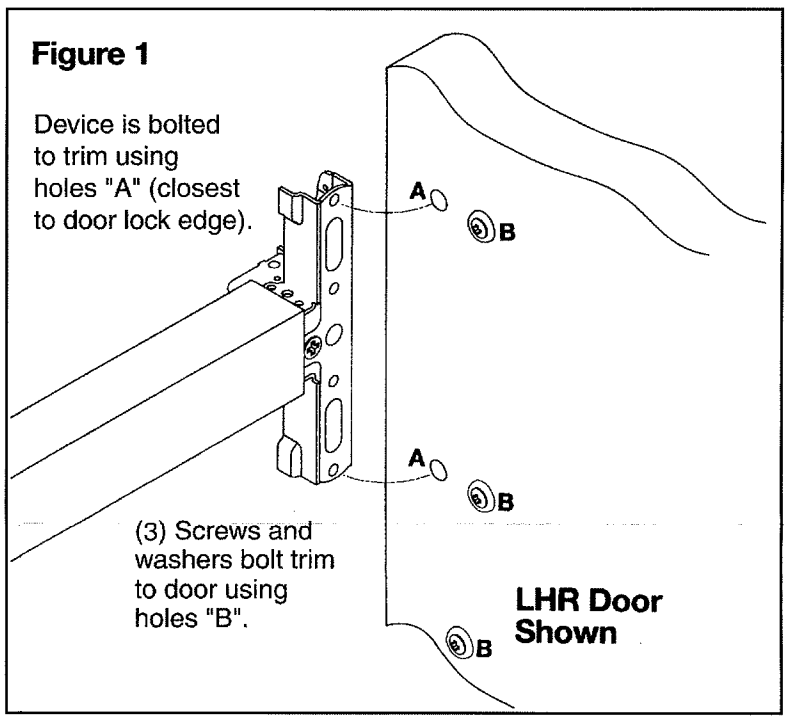

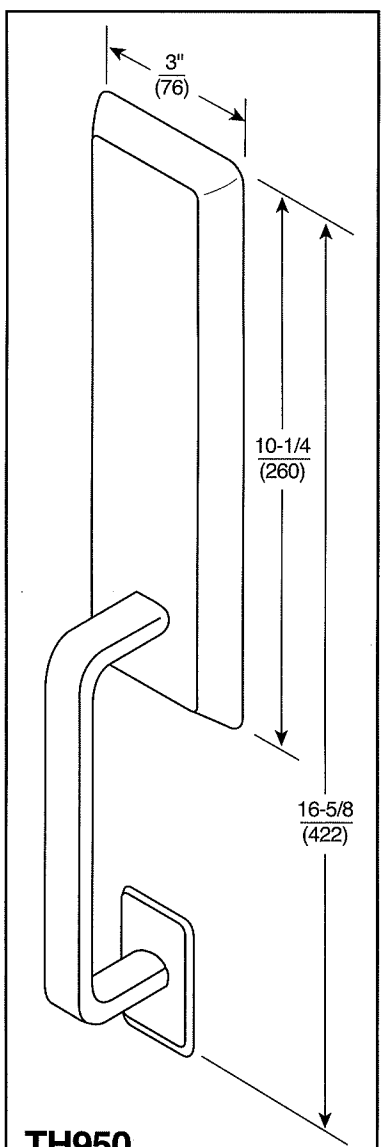

TH950 Dummy Function (Exit Only)

Corbin Russwin®
ASSA ABLOY

TH950
Heavy Duty Thumbpiece Trim
Installation Instructions
For use with ED5000 Series Exit Device
(Metal, Wood or Composite Doors)

FM258 10/07 (617417701)

Trim Components

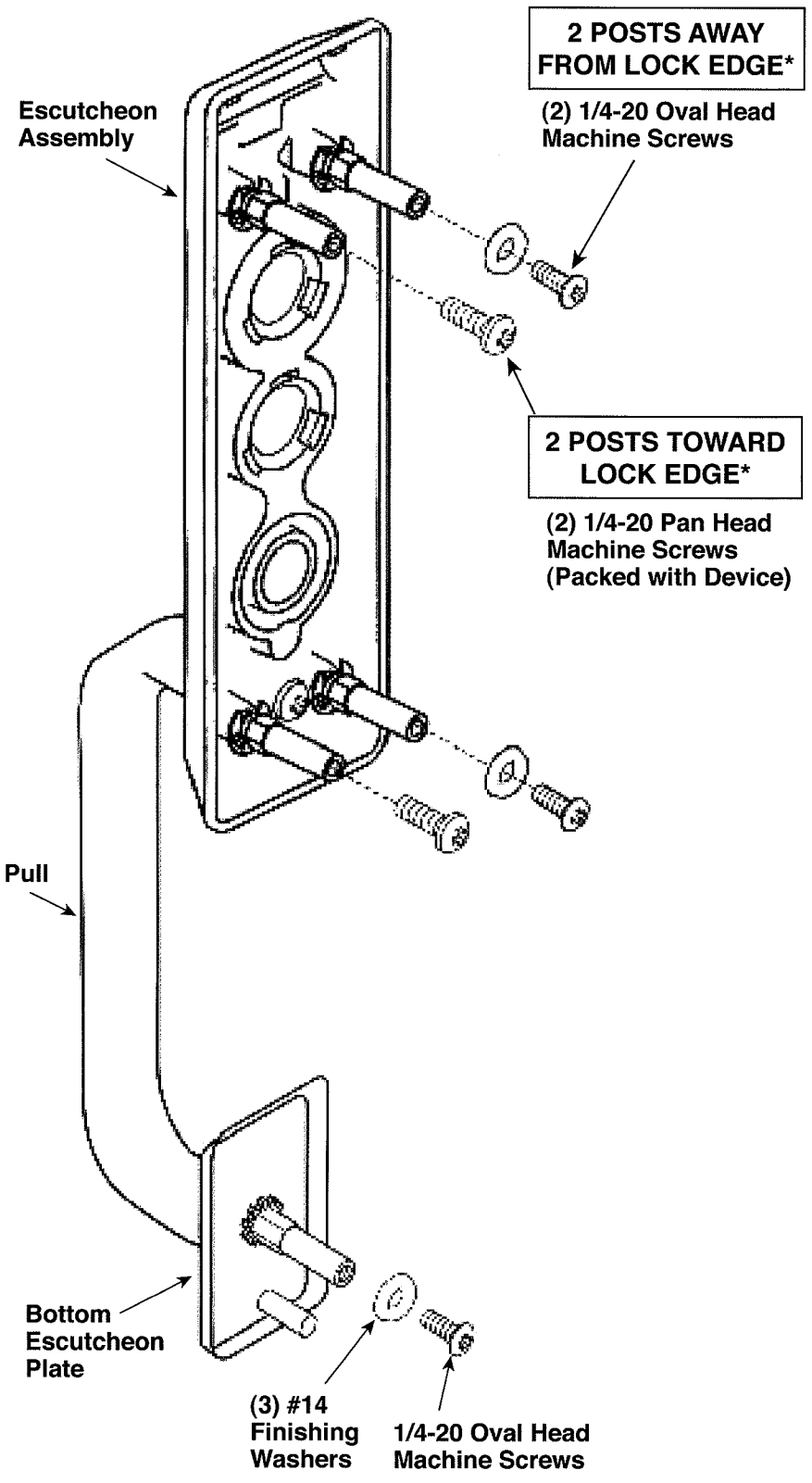

*Shown for LHR Door

Corbin Russwin®

ASSA ABLOY

In U.S.: Corbin Russwin, Inc.
225 Episcopal Road
Berlin, CT 06037-4004
www.corbinrusswin.com

Technical Product Support:
Phone: 888-607-5703
Fax: 800-659-7293

In Canada: Yale-Corbin Canada LTD
6940 Edwards Boulevard
Mississauga, ONT, L5T 2W2
www.yalecorbin.on.ca

TH950
Heavy Duty Thumbpiece Trim Installation Instructions

For use with ED5000 Series Exit Device
(Metal, Wood or Composite Doors)

FM258 10/07 (617417701)