Corbin Russwin
ASSA ABLOY

Installation Instructions

Windstorm Exit Device Shim Kits for ED5200S (A) x M107

Installation Instructions

FM 236 (617417550) Rev. 9/09

Shim Locations

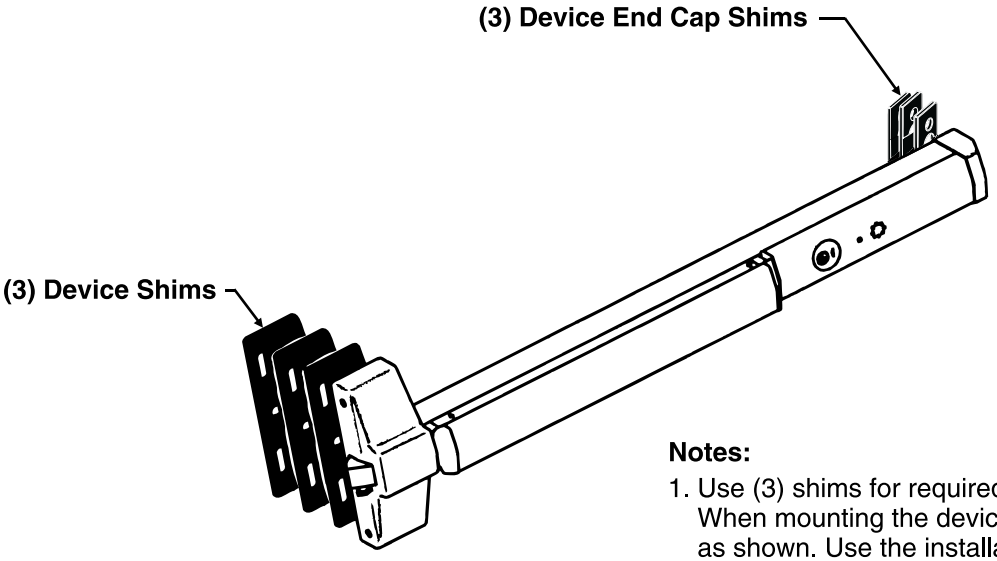

Notes:

1. Use (3) shims for required 3/8" (9.5) lift. When mounting the device, position shims as shown. Use the installation instructions packed with the unit. Use longer screws provided with this kit.

2. For SecureBolt Device, Strike, and Shim locations, see illustration below.

Caution : Strike Location Will Vary

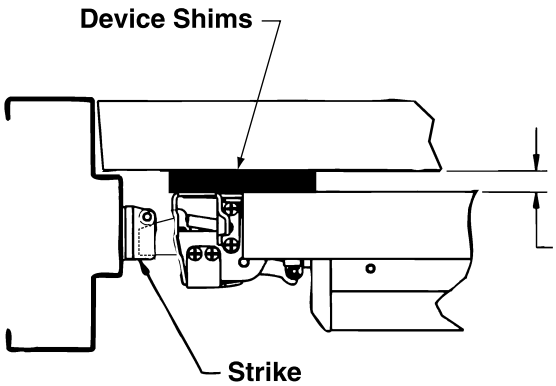

Caution - Strike location will vary. Adjust strike to compensate for the 3/8" (9.5) shim height.

Trim Spindle Instructions for Windstorm Applications

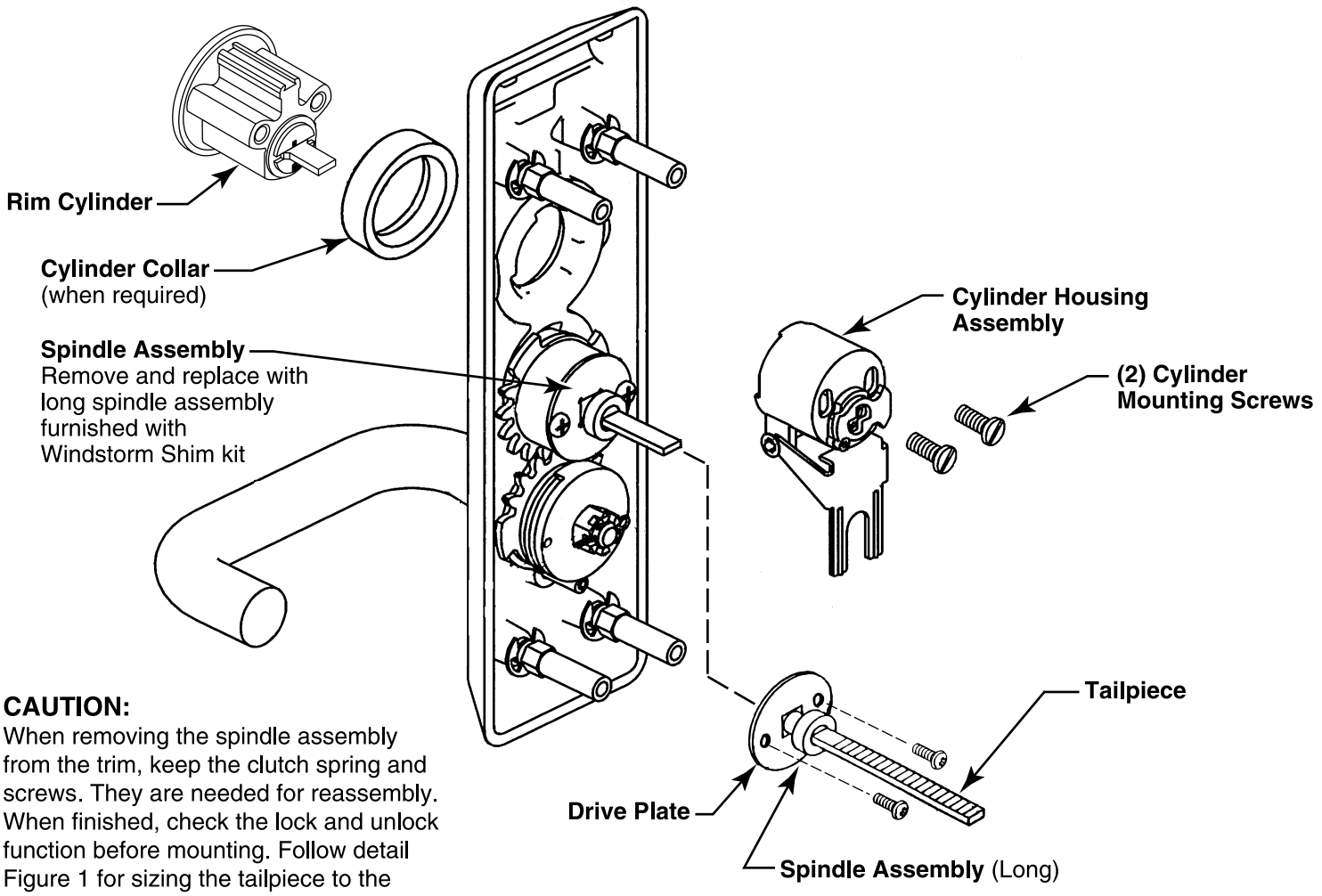

CAUTION:
When removing the spindle assembly from the trim, keep the clutch spring and screws. They are needed for reassembly. When finished, check the lock and unlock function before mounting. Follow detail Figure 1 for sizing the tailpiece to the door and shim thickness.

Dimensions given in inches (mm)

Figure 1.

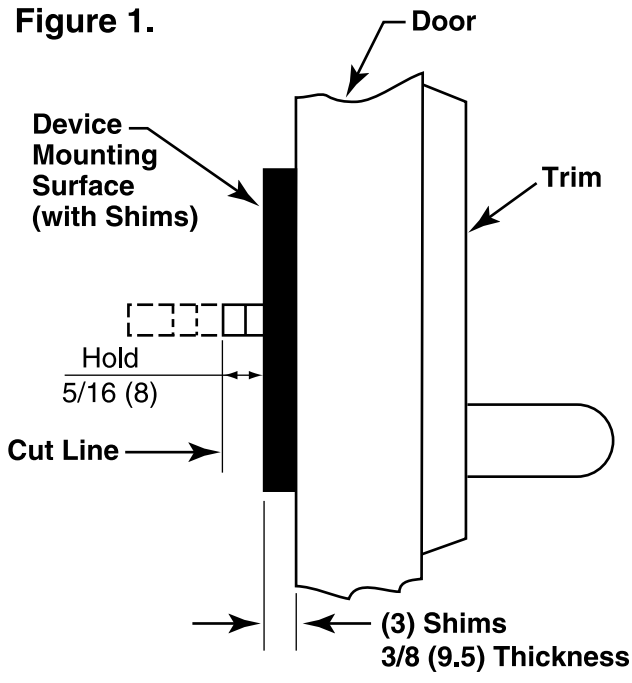

In U.S.:
Corbin Russwin, Inc.
225 Episcopal Road
Berlin, CT 06037 USA
Phone: 860-225-7411

In Canada:
ASSA ABLOY Door Security Solutions Canada
160 Four Valley Drive
Vaughan, Ontario, Canada L4K 4T9
Phone: 800-461-3007

ASSA ABLOY is the global leader in door opening solutions, dedicated to satisfying end-user needs for security, safety and convenience.

Copyright © 2009 Corbin Russwin, Inc., an ASSA ABLOY Group company. All rights reserved.
Reproduction in whole or in part without the express written permission of Corbin Russwin, Inc. is prohibited.