Corbin Russwin

Installation Instructions

ED5602 (A) SERIES MORTISE DOUBLE CYLINDER EXIT DEVICE

(For use in conjunction with Corbin Russwin 9M55 Series trim)

FM 220 9/03
(617417380)

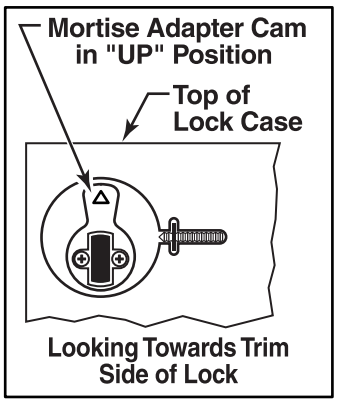

View A

Double Cylinder Mounting Instructions

1. Note that a Mortise Adapter Assembly is factory assembled in the cylinder hole on the device side of the mortise lock. Follow device mounting instructions. Once complete, continue with Double Cylinder instructions listed below.
2. Pre-assemble cylinder thru cylinder collar, active head cover, and cylinder housing as shown. Secure cylinder housing to cylinder with (2)10-24 x 3/4" cylinder screws. The keyway position should be vertical with plug in lower side of cylinder as shown.
3. Verify that cam orientation on Mortise Adapter Assembly is in "UP" position (see View A). Then rotate plug slot on adapter 90 degrees clockwise, to the vertical position. Insert key into cover cylinder and rotate 90 degrees clockwise, to position cylinder tailpiece vertically.
4. Assemble active head cover to device by aligning cylinder tailpiece with slot in Mortise Adapter Assembly (tailpiece length to be adjusted as needed for maximum engagement). Install and tighten (2) 8-32 x 1/4" cover screws to active head cover. Rotate key in cylinder 90 degrees counter clockwise, to a vertical position and remove.
5. Check for proper functional operation of lock, trim and device.

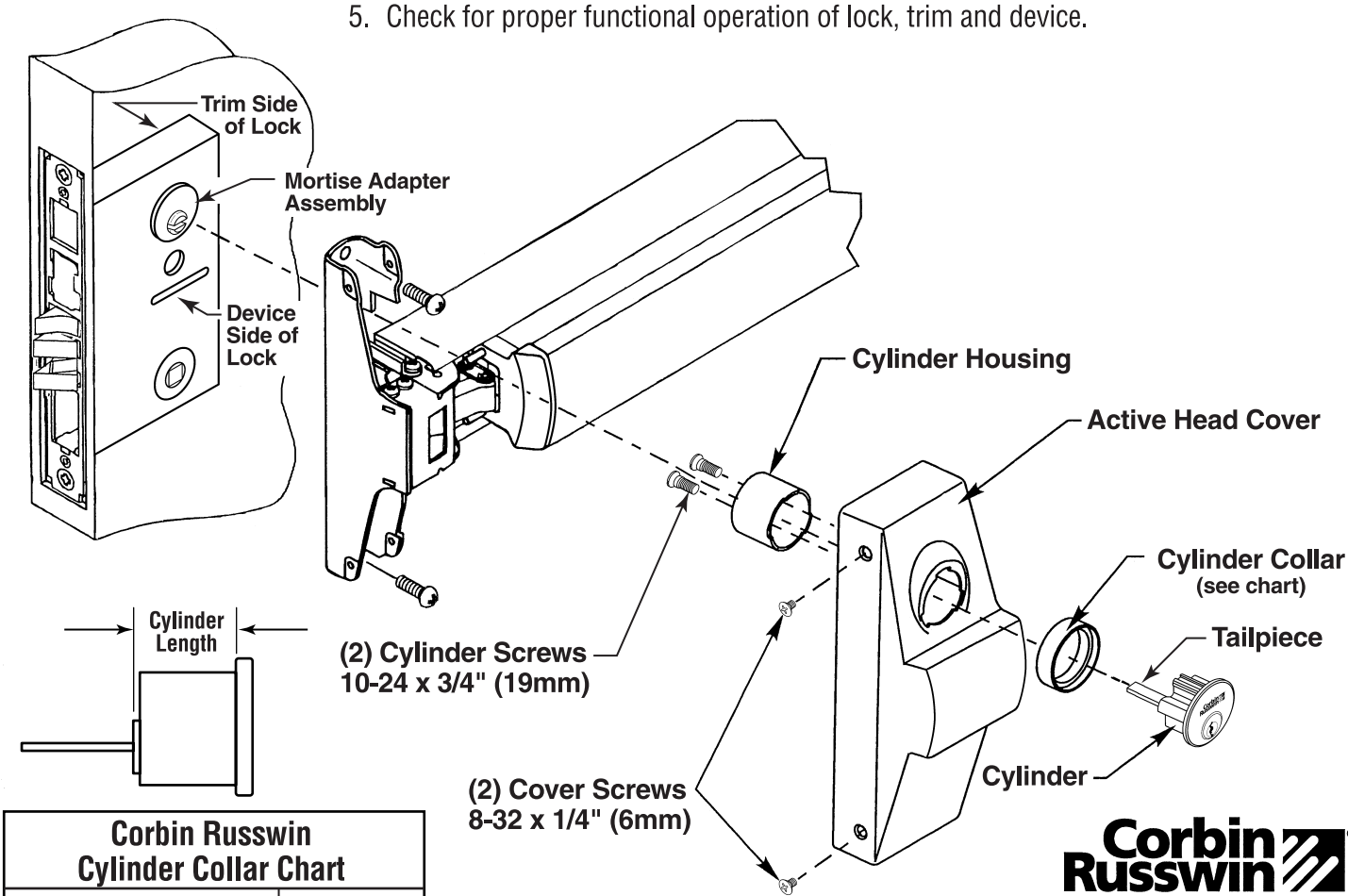

Corbin Russwin Cylinder Collar Chart	
Cylinder Length	Collar
1-1/8" (29mm)	270F15
1-1/4" (32mm)	654F07
1-1/2" (38mm)	654F08

Corbin Russwin

In Canada: Yale-Corbin Canada LTD.,
6940 Edwards Boulevard,
Mississauga, ONT, L5T 2W2
Phone: 800-461-3007 / 905-564-5854
Fax: 800-461-8989 / 905-564-8182
www.yalecorbin.on.ca

In U.S.: Corbin Russwin, Inc.,
1902 Airport Road, Monroe NC 28110
Phone: 800-543-3658 / 704-283-2101
Fax: 800-447-6714 / 704-289-6937
www.corbin-russwin.com