Corbin Russwin

Installation Instructions

ED5202S (A) SERIES SecureBolt® DOUBLE CYLINDER EXIT DEVICE

(For use in conjunction with Corbin Russwin 955 Series trim)

FM 219 9/03
(617417370)

Double Cylinder Trim Housing Assembly (supplied with device)

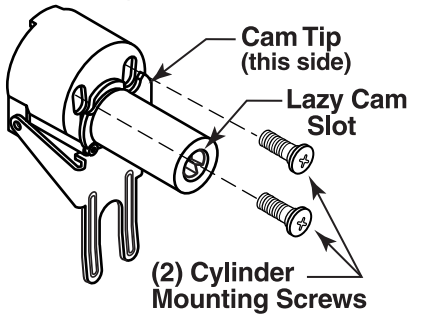

View A

Double Cylinder Mounting Instructions

1. Follow 955 Series trim installation instructions. Substitute the cylinder housing assembly with the Double Cylinder Trim Housing Assembly supplied with device (see View A). Continue with trim mounting instructions.
2. Follow ED5200S (A) mounting instructions supplied with device. Once complete, continue with Double Cylinder instructions listed below.
3. Pre-assemble cylinder thru cylinder collar, active head cover, and cylinder housing as shown. Secure cylinder housing to cylinder with (2) 10-24 x 3/4" cylinder screws. The keyway position should be vertical with plug in lower side of cylinder as shown.
4. Assemble active head cover to device by inserting cylinder tailpiece into lazy cam slot of Double Cylinder Trim Housing Assembly (tailpiece length to be adjusted as needed for non-interference with opposing trim cylinder). Install and tighten (2) 8-32 x 1/4" cover screws to active head cover.
5. Check for proper functional operation of trim and exit device.

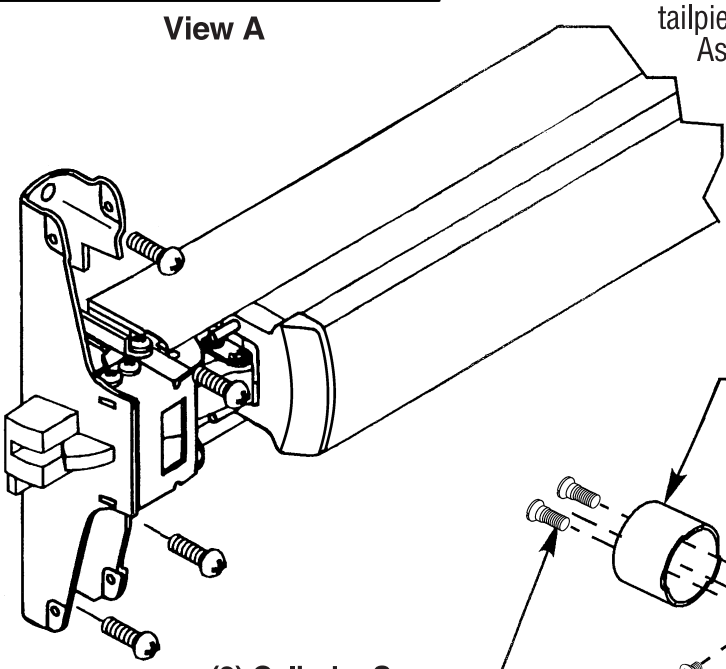

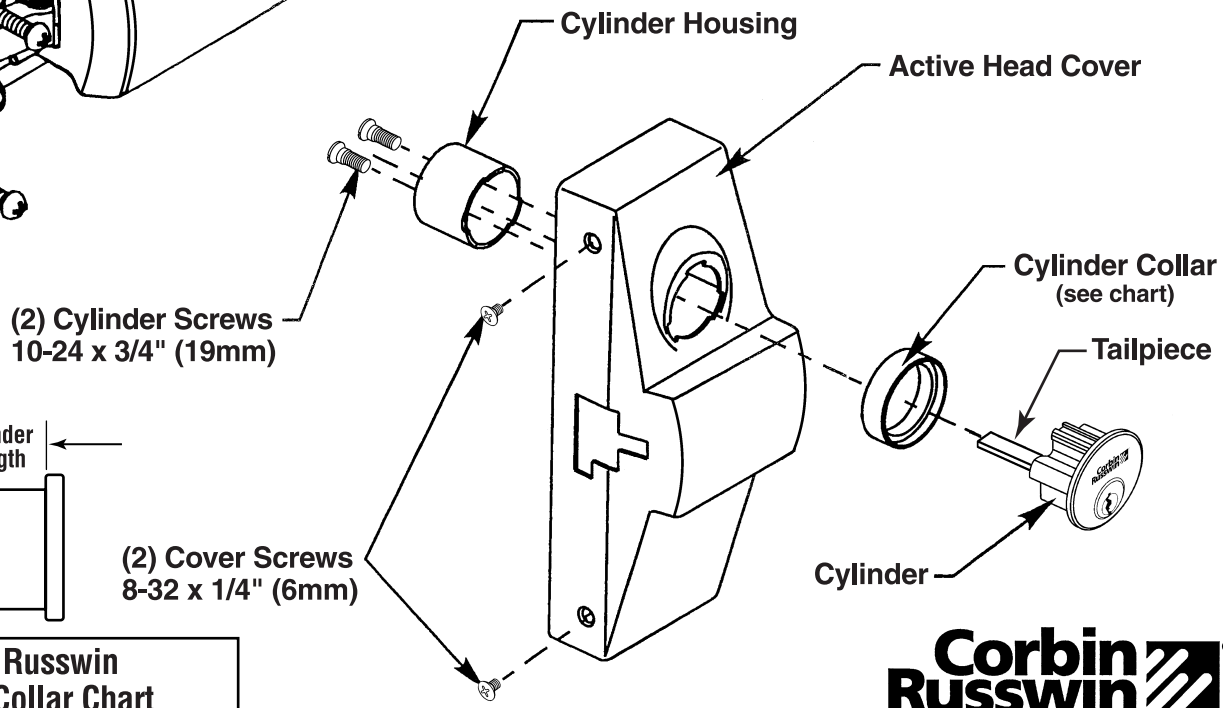

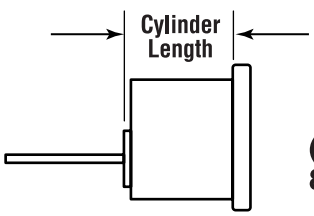

Corbin Russwin Cylinder Collar Chart	
Cylinder Length	Collar
1-1/8" (29mm)	270F15
1-1/4" (32mm)	654F07
1-1/2" (38mm)	654F08

Corbin Russwin

In Canada: Yale-Corbin Canada LTD.,
6940 Edwards Boulevard,
Mississauga, ONT, L5T 2W2
Phone: 800-461-3007 / 905-564-5854
Fax: 800-461-8989 / 905-564-8182
www.yalecorbin.on.ca

In U.S.: Corbin Russwin, Inc.,
1902 Airport Road, Monroe NC 28110
Phone: 800-543-3658 / 704-283-2101
Fax: 800-447-6714 / 704-289-6937
www.corbin-russwin.com