Corbin Russwin

Installation Instructions

*9903 and *9905 SERIES
HEAVY DUTY ELECTRICALLY CONTROLLED TRIM

For use with ED5000 Series Exit Device (Wood and Metal Doors)

FM 211 9/02
(617417152)

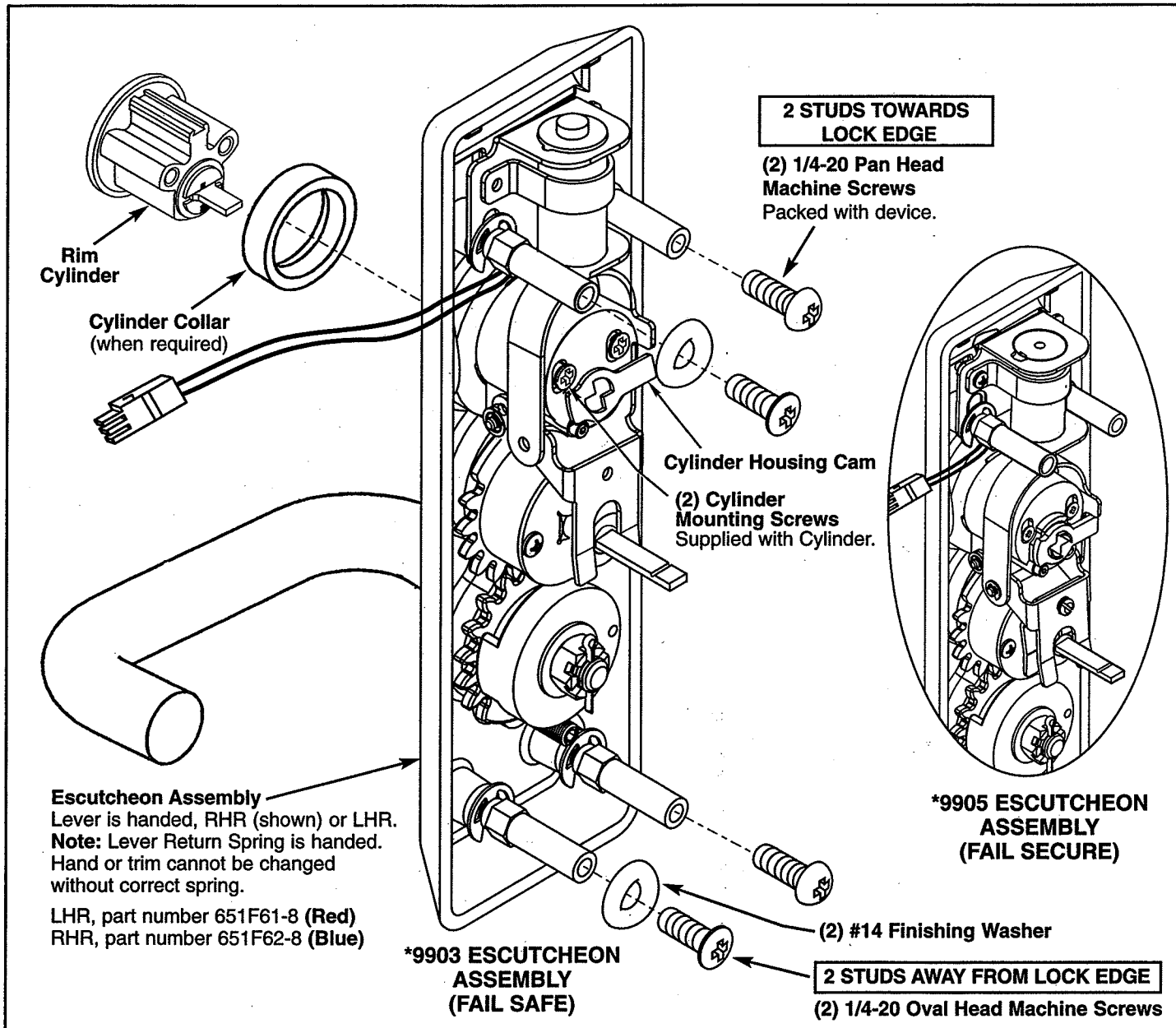

1. **Check cylinder components.**
   NOTE: Cylinders longer than 1-1/8" (29mm) will require collars. Refer to Corbin Russwin Cylinder Collar Chart.
2. **When required, cut cylinder tailpiece.**
   Correct length is 1/16" to 3/16" (2 to 5 mm) beyond cylinder housing cam.
3. **Assemble cylinder.**
   Insert cylinder housing prongs into matching notches of escutcheon. Pass cylinder tailpiece thru cylinder collar (when required) and slot in cylinder housing cam. Fasten cylinder in escutcheon recess or collar using (2) mounting screws. (DO NOT OVERTIGHTEN SCREWS).

Corbin Russwin Cylinder Collar Chart

Cylinder Length	Collar
1-1/8" (29)	None
1-1/4" (32)	654F07 **
1-1/2" (38)	654F08 **

** Specify finish

** Represents prefix letter(s) for various lever designs.*

Installation Instructions

1. Assemble trim. See previous page for components and instructions.
2. After marking door inside face for device location (Device Instructions), transfer "Vertical Reference Centerline" from inside to outside door face. Follow steps 2a. and 2b. below.
3. Transfer "Horizontal Reference Centerline" from inside to outside door face.
4. Align trim template and tape to outside door face.
5. Spot holes and prepare door for trim.
6. Pull wire through wire access hole as trim is placed in prep. To avoid wire entanglement in trim mechanism, do not leave excess wire in trim prep. Mount trim to door thru holes "B". Fasten, finger tight only, with 2 screws and washers seating on door, as shown in Figure 1.
7. With trim unlocked (tailpiece turning when lever is moved), cut trim tailpiece as shown in Figure 2. **NOTE:** For fail secure trim, apply power before cutting or turn and hold key to extend tailpiece.
8. Determine power transfer method, through door or through device. For through device, see "Exit Device Wiring" below. Seat device so that trim tailpiece engages with cross hole of cam slot in horizontal position as shown in Figure 1. Continue device mounting as shown in device instructions. Do not install covers until device is wired. Connect trim to 4' wire harness. Refer to Typical Wiring Instructions after device has been installed.

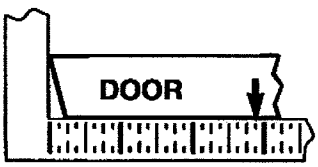

2a. **MEASURE INSIDE LINE LOCATION.**

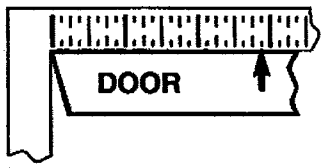

2b. **TRANSFER DIMENSION TO OUTSIDE FACE.**

Exit Device Wiring (Figure 3)

a. Remove end cover and bottom cover.
b. Remove trim slide retainer and replace with new retainer.
c. Place wire bracket over new trim slide retainer, as shown.
d. Place wire harness on the carrier with the plug connector at the latch side of the device. Allow 6" for connection to the electric trim. Place the wire harness between the wire bracket and carrier. (LHR SHOWN).
e. Replace the bottom cover and end cover.

FIGURE 1

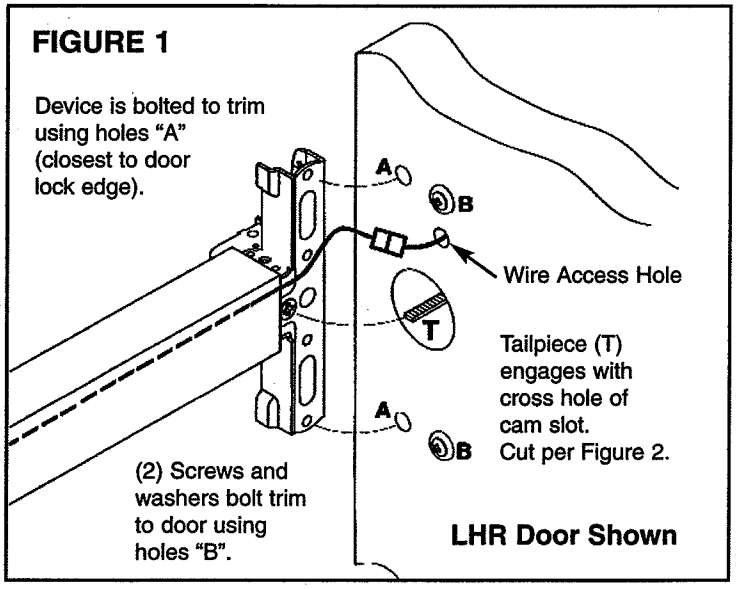

FIGURE 2

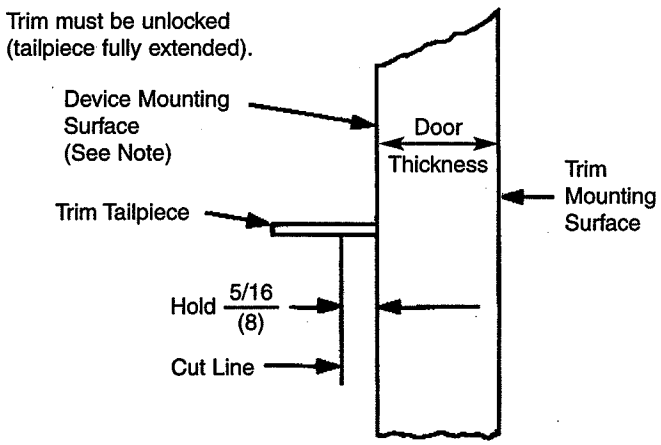

NOTE: Measure from device mounting surface (door face or shim surface).

FIGURE 3
(See Steps 8a. - 8e.)

TOP VIEW

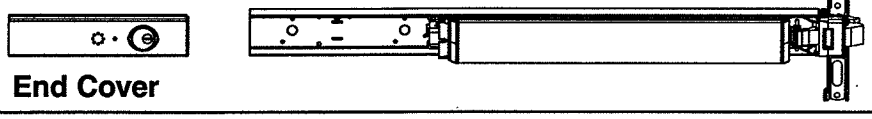

End Cover

BOTTOM VIEW (LHR Shown)

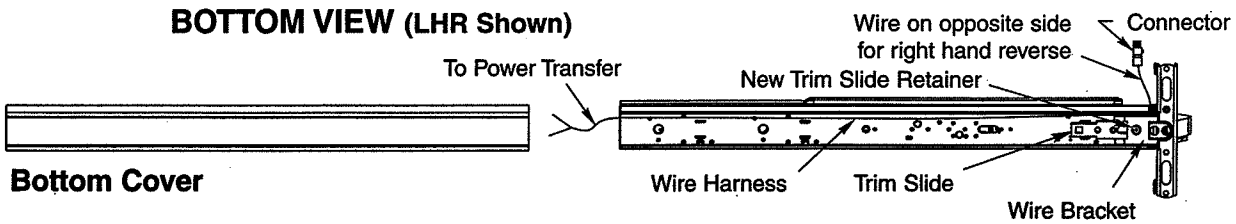

Bottom Cover

Typical Wiring Instructions

9903 & 9905 Series Electrically Controlled Trim

ELECTRICAL SPECIFICATIONS

9903 - Fail Safe Control
9905 - Fail Secure Control
.33 AMP @ 24 Volts AC or DC +/- 2 Volts
Monitoring Contact Rating: 4 AMP @ 250 VAC

DC/AC POWER LEADS

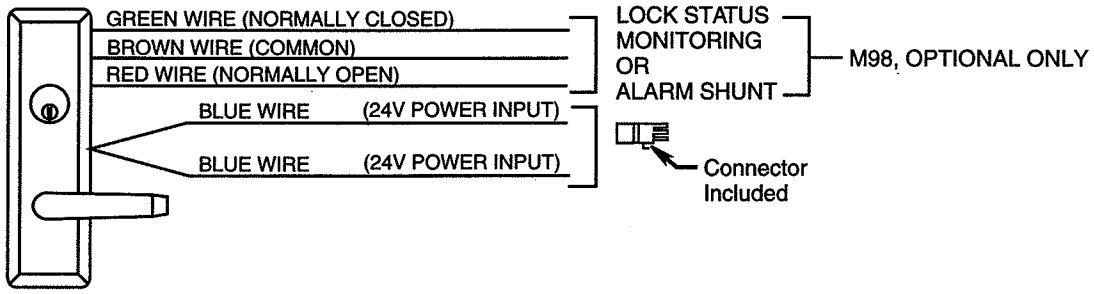

9903 FAIL SAFE CONTROL

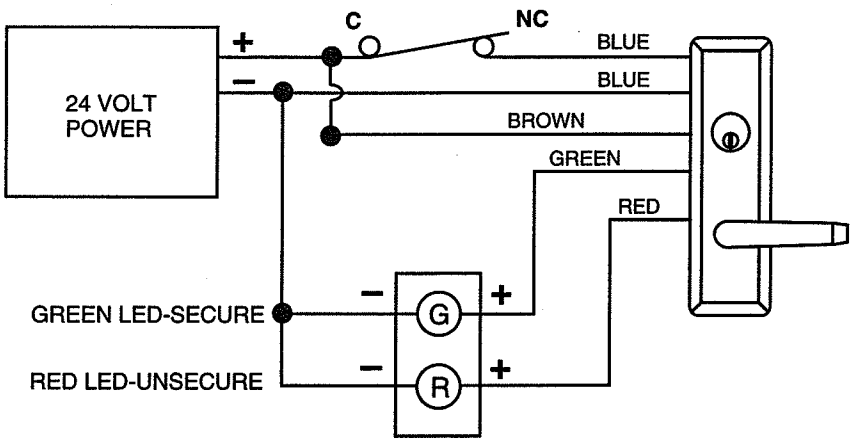

9905 FAIL SECURE CONTROL

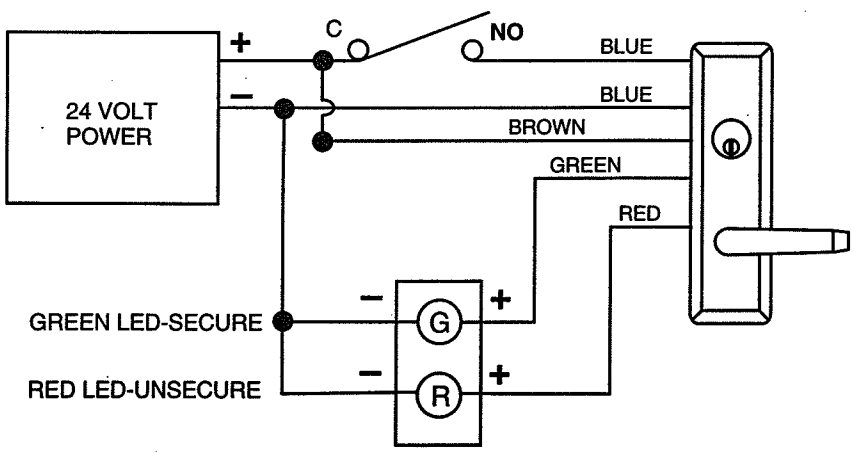

Installation Instructions

9903 & 9905 Series Heavy Duty Electrically Controlled Trim

Electric Trim Function

Function	Function Description
9903 (FAIL SAFE)	• Lever is locked when power is on (free wheeling) • Power off allows entry from trim • Inside device is always active for egress • Mechanical key override(F09 Function-Key allows lever to retract latchbolt. Key can only be removed in locked position)
9905 (FAIL SECURE)	• Lever is locked when power is off (free wheeling) • Power on allows entry from trim • Inside device is always active for egress • Mechanical key override(F09 Function-Key allows lever to retract latchbolt. Key can only be removed in locked position)

Electric Trim Troubleshooting

Problem	Solution
Trim will not retract latchbolt when power is applied (Fail Secure) or when power is removed (Fail Safe)	• Check trim installation for binding • The cylinder tailpiece may be out of alignment with the exit device. • Loosen trim mounting screws and realign trim to exit device • Check voltage at trim and wire transfer to determine correct voltage is applied.
Mechanical key will not allow lever to retract latchbolt	• Check trim installation for binding • Check and make sure the cylinder attaching screws are tight • Make sure cam moves freely

Corbin Russwin is a registered trademark of Corbin Russwin, Inc. Other product brand names may be trademarks or registered trademarks of their respective owners and are mentioned for reference purposes only. These materials are protected under U.S. copyright laws. All contents current at time of publication. Corbin Russwin, Inc., reserves the right to change availability of any item in this manual, it's design, construction, and/or it's, material.

Copyright © 2002 Corbin Russwin, Inc., all rights reserved.

Corbin Russwin®

In U.S.: Corbin Russwin, Inc.,
1902 Airport Road, Monroe NC 28110
Phone: 800-543-3658 / 704-283-2101
Fax: 800-447-6714 / 704-289-6937
www.corbin-russwin.com

In Canada: Yale-Corbin Canada LTD.,
6940 Edwards Boulevard,
Mississauga, ONT, L5T 2W2
Phone: 800-461-3007 / 905-564-5854
Fax: 800-461-8989 / 905-564-8182
www.yalecorbin.on.ca

Corbin Russwin®

*9903 and *9905 SERIES HEAVY DUTY ELECTRICALLY CONTROLLED TRIM

Door Marker Template

FM 211 9/02 **(617417152)**

Dimensions given in Inches (mm).

HOLES MARKED "X" (4 Places)	
METAL DOORS:	
Inside Face	**5/16" (8) Dia.**
Outside Face	**1/2" (13) Dia. Thru**
WOOD DOORS:	**1/2" (13) Dia. Thru**

CAUTION: Office copiers and facsimile machines may change the size of a drawing and make the template inaccurate to use as a door marker. If this is not the original template packed with the trim, use only the original template packed with the trim, use only the dimensions written on the template to locate the holes on the door (do not use the template as a door marker).

Corbin Russwin is a registered trademark of Corbin Russwin, Inc. Other product brand names may be trademarks or registered trademarks of their respective owners and are mentioned for reference purposes only. These materials are protected under U.S. copyright laws. All contents current at time of publication. Corbin Russwin, Inc., reserves the right to change availability of any item in this manual, it's design, construction, and/or it's, material.

Copyright © 2002 Corbin Russwin, Inc., all rights reserved.

Corbin Russwin®

In U.S.: Corbin Russwin, Inc.,
1902 Airport Road, Monroe NC 28110
Phone: 800-543-3658 / 704-283-2101
Fax: 800-447-6714 / 704-289-6937
www.corbin-russwin.com

In Canada: Yale-Corbin Canada LTD.,
6940 Edwards Boulevard,
Mississauga, ONT, L5T 2W2
Phone: 800-461-3007 / 905-564-5854
Fax: 800-461-8989 / 905-564-8182
www.yalecorbin.on.ca

