Installation Instructions for Mortise Vandal Resistant Trim ML2000VR x CSV/NSV

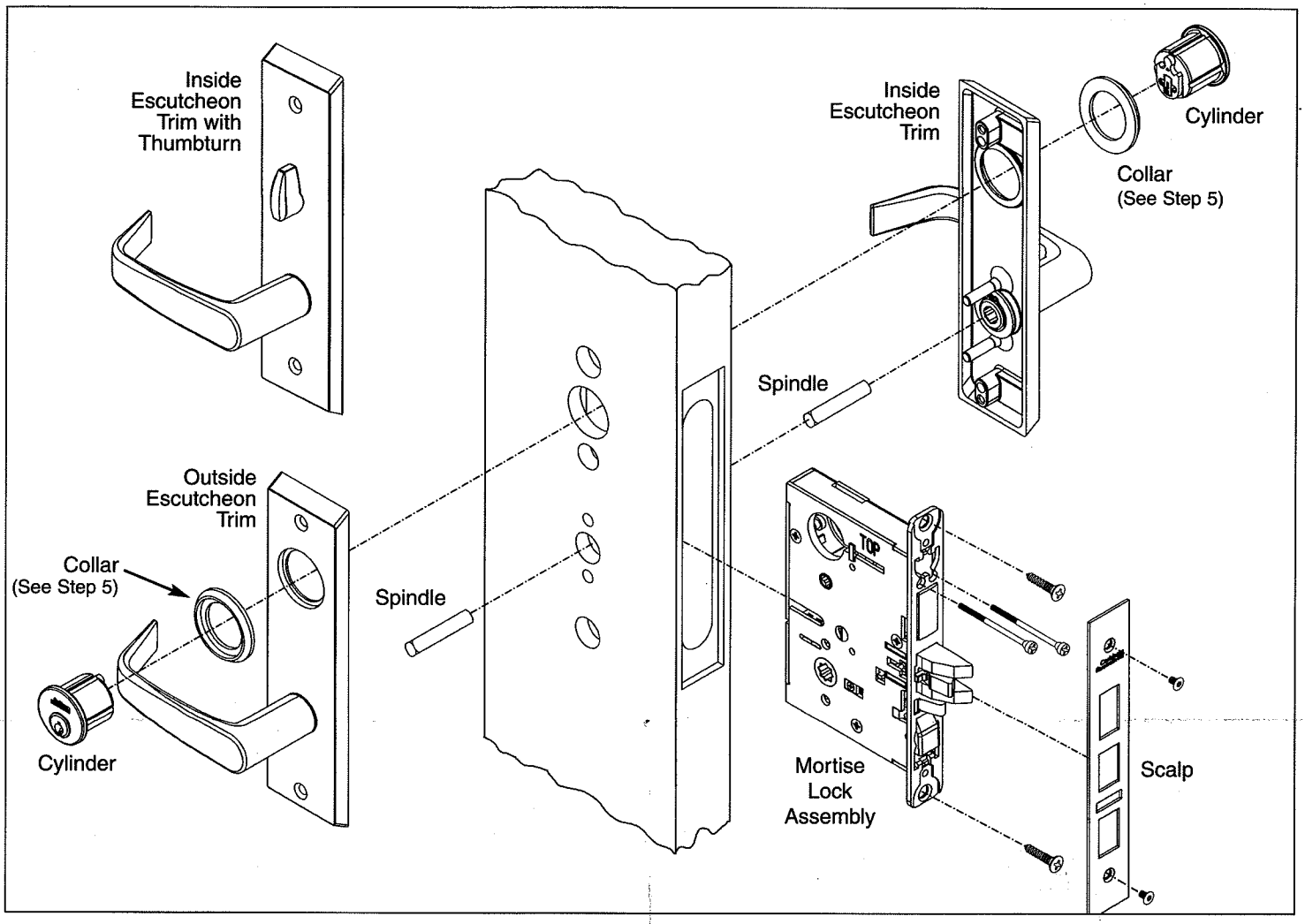

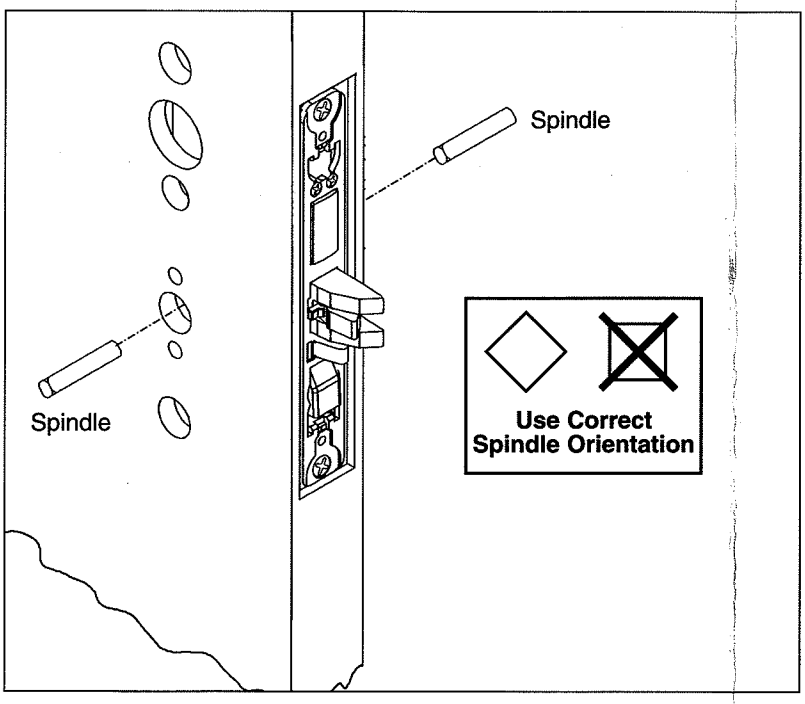

Step 1

Mortise door for required lock and bore holes. Use template packed with lock. Thread cylinder set screws partially into lock before inserting lock into mortise. Insert lock into mortise opening.

Hand tighten combo screws.

Step 2

Install spindle from each side. Look for proper orientation.

Note location for screws on each escutcheon.

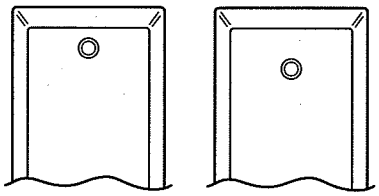

Corbin Russwin

Installation Instructions for Mortise Vandal Resistant Trim

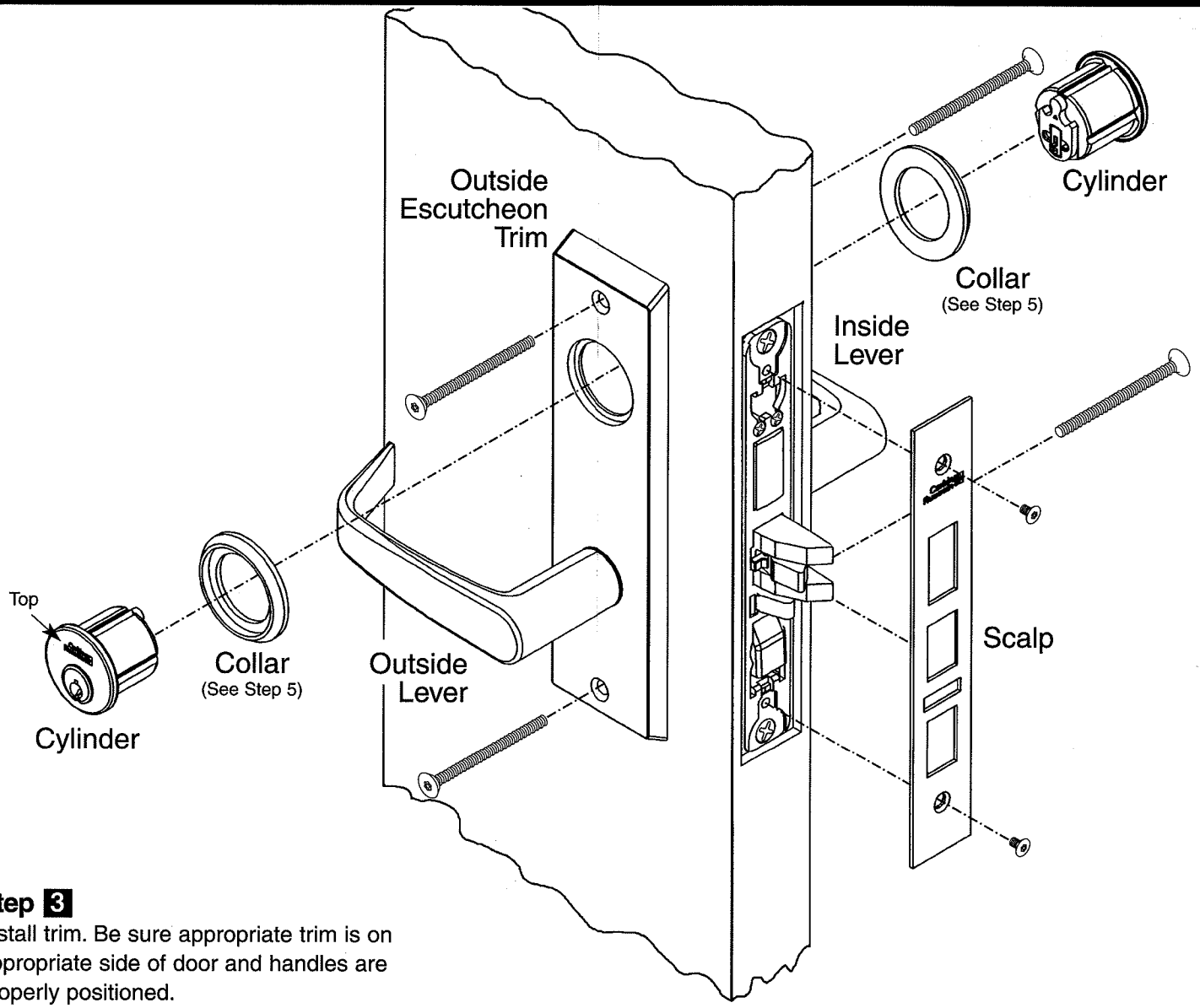

Step 3
Install trim. Be sure appropriate trim is on appropriate side of door and handles are properly positioned.

Step 4
Fasten Torx screws. **Hand tighten screws.** (4 tamper resistant screws total).

Step 5
Install collar and cylinder from inside and outside if applicable. Screw cylinders in flush with collar or escutcheon. (Corbin Russwin logo on top). Secure cylinder with cylinder set screw.

Step 6
Check function from both sides using key and lever.

Step 7
Tighten all screws on mortise lock and escutcheons.
Check function from both sides using key or lever.

Step 8
Install scalp and strike. Tighten screws using #20 Torx bit.
Check function from both sides using key and lever.

CAUTION:
With door closed, VERIFY latch bolt and deadbolt will project into strike openings FREELY.

Corbin Russwin

In U.S.: Corbin Russwin, Inc.
1902 Airport Road, Monroe, NC 28110
Phone: 800-543-3658 / 704-283-2101
Fax: 800-447-6714 / 704-289-6937
www.yalesecurity.com

In Canada: Yale-Corbin Canada LTD.
3160 Orlando Drive
Mississauga, Ontario, Canada L4V1R5
Phone: 800-461-3007 / 905-672-6220
Fax: 800-461-8989 / 905-672-9022
www.yalecorbin.on.ca