Installation Instructions

ED5600(A) Series
Mortise Exit Devices

In U.S.:
Corbin Russwin, Inc.
225 Episcopal Road
Berlin, CT 06037 USA
www.corbinrusswin.com

In Canada:
ASSA ABLOY Door Security Solutions Canada
160 Four Valley Drive
Vaughan, Ontario, Canada L4K4T9
www.assaabloy.ca

Technical Product Support: Phone: 888-607-5703

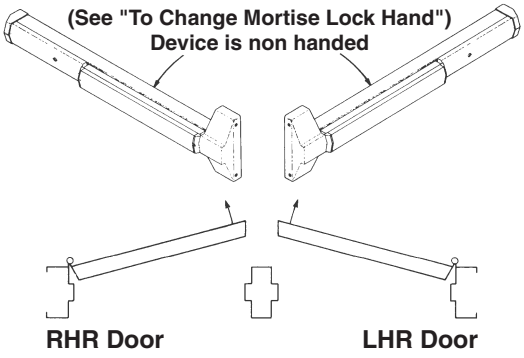

For Metal, Composite, and Wood Doors

Outside Trim

Device is packed ready for any compatible trim.

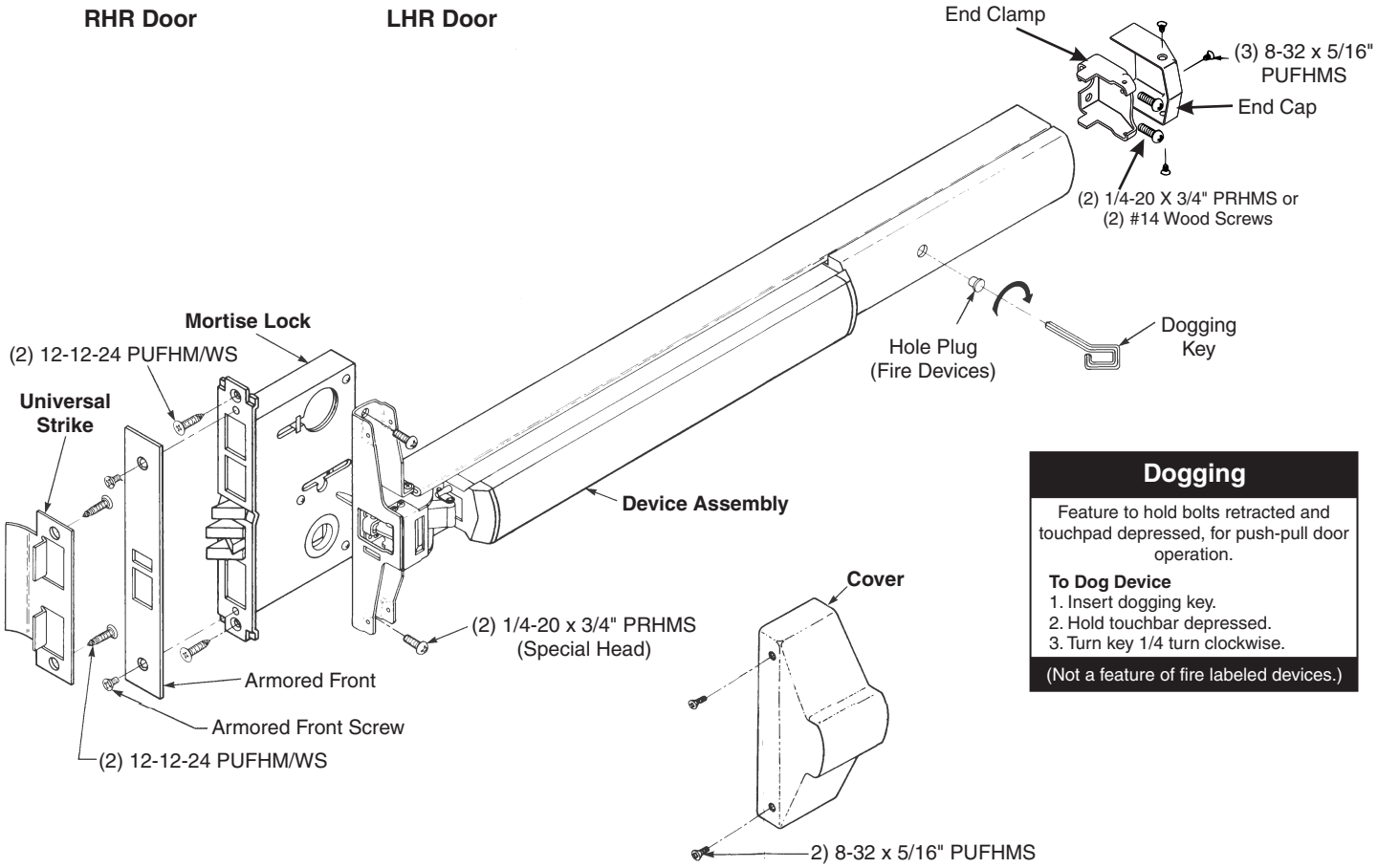

Dogging

Feature to hold bolts retracted and touchpad depressed, for push-pull door operation.

To Dog Device
1. Insert dogging key.
2. Hold touchbar depressed.
3. Turn key 1/4 turn clockwise.

(Not a feature of fire labeled devices.)

Copyright © 2012 Corbin Russwin Inc., an ASSA ABLOY Group company.
All rights reserved. Reproduction in whole or in part without the express written permission of Corbin Russwin, Inc. is prohibited.

Corbin Russwin®

ASSA ABLOY

To Change Mortise Lock Hand

Typical Lock Body with Cover removed and showing only components relevant to lock handing. Other components vary according to function.

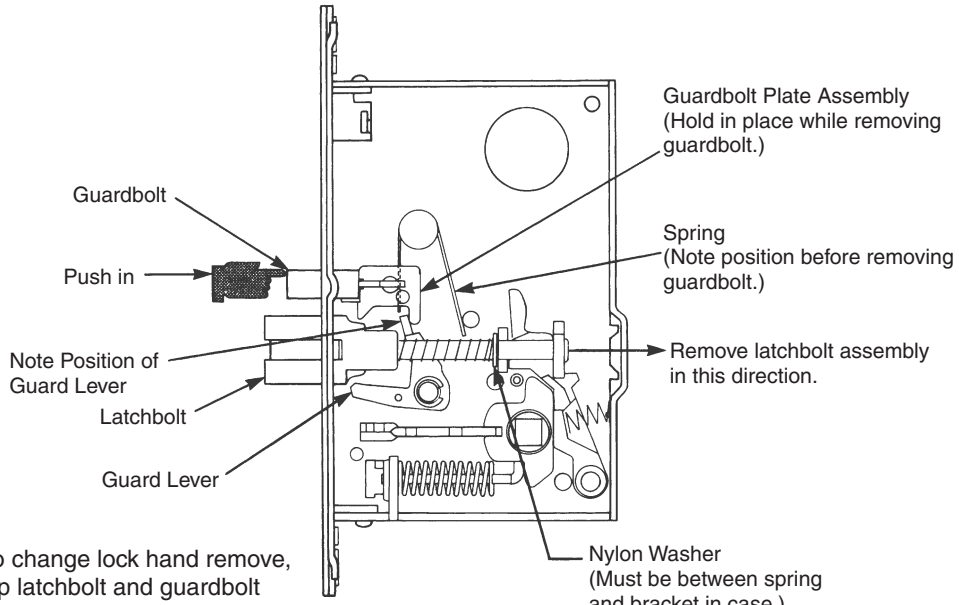

To change lock hand remove, flip latchbolt and guardbolt and reinstall.

Shim Kit Option

650F91-8 Black Finish

Kit consists of Latch Head Shims (Device Cover seats on shim) and End Clamp Shims (End Cap seats on shim).

Each shim is 1/8" (3.2mm) thick more than two shim thicknesses 1/4" (6.4mm), require longer device mounting screws (not included).

Maintenance

1. Periodically remove covers and coat mechanisms with a silicone base lubricant. This is particularly required in corrosive environments for proper product function.

2. Check mounting fasteners periodically. Retighten if found loose. Apply screw locking compound (available at automotive part stores) or change part fasteners if screws continue to back out.

1/4-20 Sex Nut Option

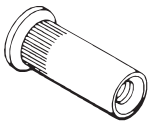

Recommended for wood composite or unreinforced metal doors.

Device	Quantity	Size
No Trim	4	1/4-20
With Trim	2	

Copyright © 2012 Corbin Russwin Inc., an ASSA ABLOY Group company.
All rights reserved. Reproduction in whole or in part without the express written permission of Corbin Russwin, Inc. is prohibited.

Check Before Starting

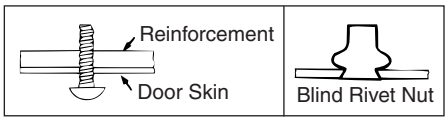

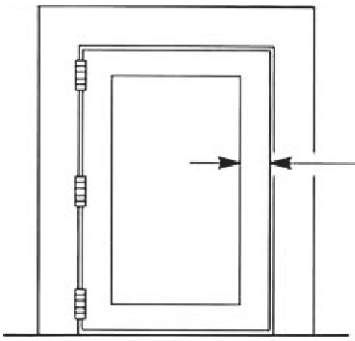

Minimum Door Stile: 4-1/2" (114mm)
Door and frame must meet structural and dimensional specifications on exit device template(s) for door and frame preparation.

Unreinforced Doors or Frames

Doors and Frames with walls having a structural thickness (metal skin plus reinforcement or solid hardwood) to engage less than (3) full screw threads are considered unreinforced.

Unreinforced Doors: Use SNB (sex nuts and bolts).

Unreinforced Frames: Use Blind Rivet Nuts.

Recommended fasteners for unreinforced openings are not necessarily supplied by Corbin Russwin.

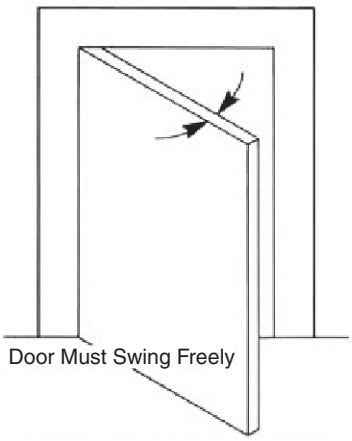
Door Must Swing Freely

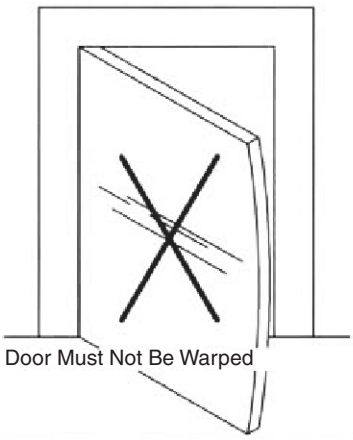
Door Must Not Be Warped

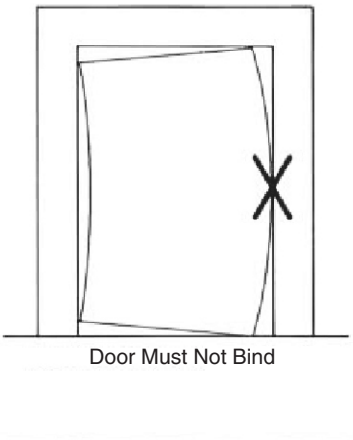
Door Must Not Bind


Door Must Not Sag

1. Mark Door

Locate and Mark Horizontal and Vertical Centerlines as shown.

LHR door shown.
Preparation is typical for both door hands.

Note: Centerline of Lock (cutout) must match HORIZONTAL REFERENCE centerline.

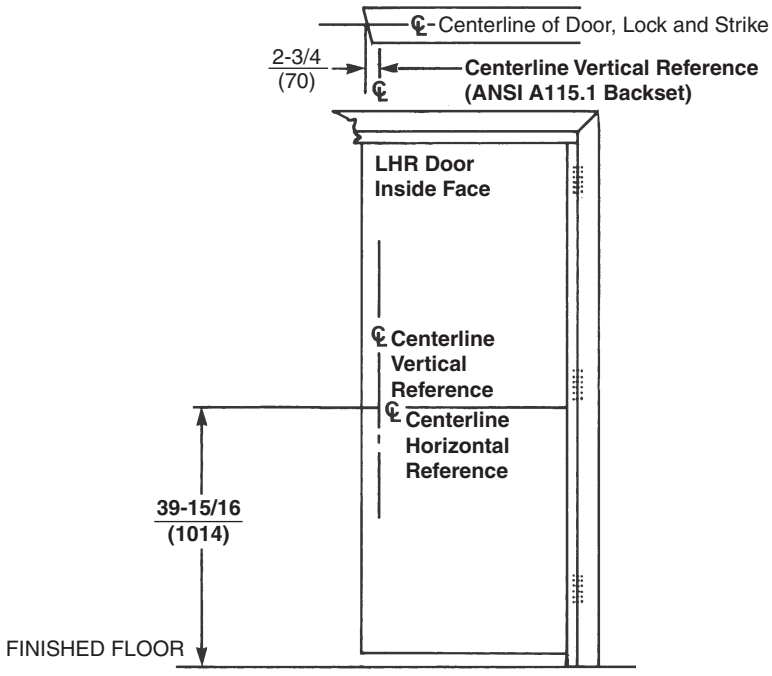

Copyright © 2012 Corbin Russwin Inc., an ASSA ABLOY Group company.
All rights reserved. Reproduction in whole or in part without the express written permission of Corbin Russwin, Inc. is prohibited.

2. Prepare Door & Frame

Factory prepared cutouts with field drilled mounting holes are recommended. If door (lock) and frame (strike) have to be mortised in the field, do it before continuing (follow instructions on Installation Template).

Spot and prepare mounting holes as follows:

A. Locate and tape Trim Template to door. (See instructions packed with trim.)

B. Locate "Device Template" aligning VERTICAL REFERENCE and HORIZONTAL REFERENCE lines on door and template. Tape template to door face.
- **(1)** Slot1/2" (12.7) Dia x 1" (25.4) on centers thru inside door face, and
- **(2)** Device holes for 1/4-20 machine screws for metal reinforced doors only, or 3/8" (9.5) Dia sex nuts and bolts.

C. Insert lock into mortise, adjust front for door edge (beveled or flat)*.
- **(2)** Lock holes for 12-24 machine screws or for #12 wood screws.

*NOTE: Lock base front has to be field tightened in place, (two screws, each on lock case top and bottom).

D. Seat strike in frame cutout.
- **(2)** Strike holes for 12-24 machine screws or for #12 wood screws.

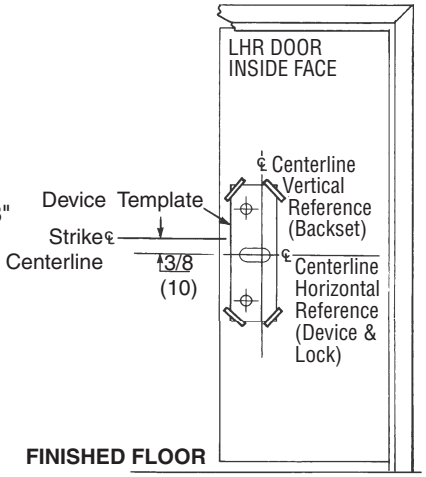

3. Size Device

Device must be field cut to size, unless standard opening and device are 36" (0.91m).

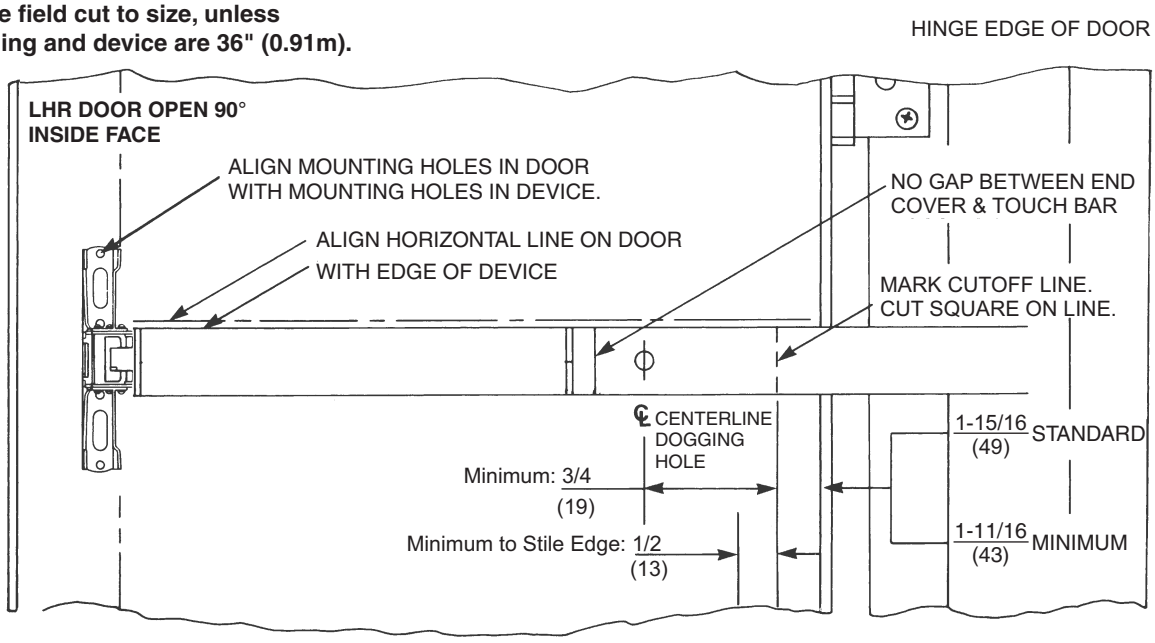

4. Clear Raised Door Molding

Device must seat flush on door surface or on shims that keep it parallel to door face.

Two Shim Kits maximum for standard device in 1-3/4" (44) door. For thicker doors, consult the factory.

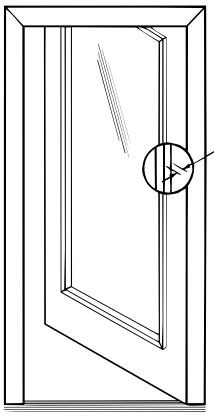

Copyright © 2012 Corbin Russwin Inc., an ASSA ABLOY Group company. All rights reserved. Reproduction in whole or in part without the express written permission of Corbin Russwin, Inc. is prohibited.

5. Install Components

A. Install Lock

Lock in hand, depress guardbolt. Check that latchbolt is deadlocked. Check that latchbolt lever (and cylinder lever, hubs, and thumbpiece lever, if relevant) operate the lock freely.

Insert Lock Body into door cavity. Fasten to door edge (2 PUFHM/WS) Note: Make sure that door reinforcing clips or doorwalls support lock immovable (restricting rocking motion).

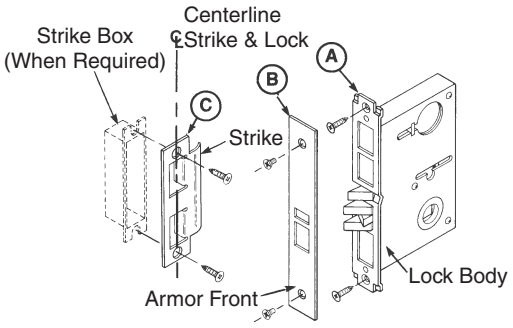

B. Install Armor Front

Fit over bolts and fasten to lock base front (2 PUFHMS). Check that bolts retract and extend freely.

C. Install Strike

Seat in place (lip bend away from opening). Fasten to frame (2 PUFHM/WS).

D. Install Trim

Follow instructions packed with trim.

E. Install Device

Seat Bar in place (Device finger must engage latchbolt lever, thru slot in lock case/cover, as shown in Detail 1). Fasten Device Head (2 PRHMS or SNB). Set Bar level. Locate End Clamp holes. Prepare End Clamp mounting holes. Fasten End Clamp in place. (2 #1/4-20 PRHMS or 3/8" (9.5) Dia. SNB).

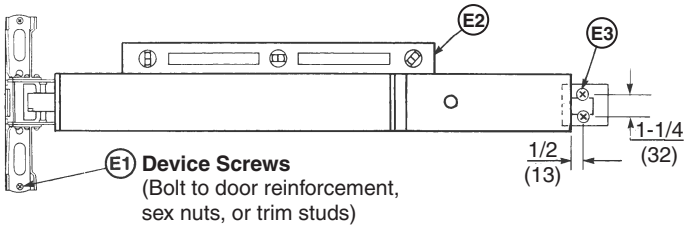

F. Check Operation

1. Depress touchbar (bolt must retract). Release touchbar (bolt must extend).
2. Actuate trim (bolt must retract). Release trim actuator (bolt must extend).
3. (NOT FOR FIRE DEVICES) Depress touchbar, turn dogging key clock wise (bar must remain depressed, bolt must remain retracted). Turn dogging key counter clockwise (bar and bolt must return to extended position).
4. Close door. Latchbolt should fully engage into strike cavity, guardbolt should retract over strike ramp. Door should not rattle.

   NOTE: When resulting operation is faulty, check first for visible binding or interference. If there is no apparent reason for the fault, remove item from the door and recheck its operation before assuming that it is defective. If latchbolt travel is not adequate, adjust device finger as shown on Detail 2.

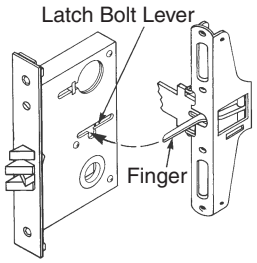

Detail 1

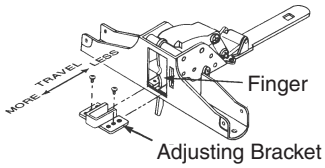

Detail 2

G. Tighten all Mounting Screws.

6. Install Head Cover and End Cap

Use (2) 8-32 PFHMS for Cover and (3) 8-32 PFHMS for End Cap.

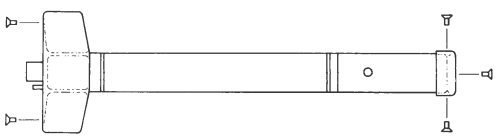

Copyright © 2012 Corbin Russwin Inc., an ASSA ABLOY Group company. All rights reserved. Reproduction in whole or in part without the express written permission of Corbin Russwin, Inc. is prohibited.