ELECTRO-MECHANICAL BAR (EMB) SERIES INSTALLATION INSTRUCTIONS

1. SPECIFICATIONS

MECHANICAL	ELECTRICAL/ENVIRONMENTAL
Physical Size: Height: 2-5/8" [66mm] Depth: 1-5/8" [41mm] (from mounting surface) Overall Length: 36" Door = 34-1/2" [876mm] 42" Door = 40-1/2" [1029mm] 48" Door = 46-1/2" [1181mm] Operating Force (Maximum): 15 Lbs. [66.7N]	Maximum Recommended Current: 1.5 Amps @ 30VDC Environmental (Recommended): Temperature: 32ºF to 120ºF [0ºC to 49ºC] Humidity: 10% to 90% RH

2. COMPONENTS

EMB UNIT PACKAGE

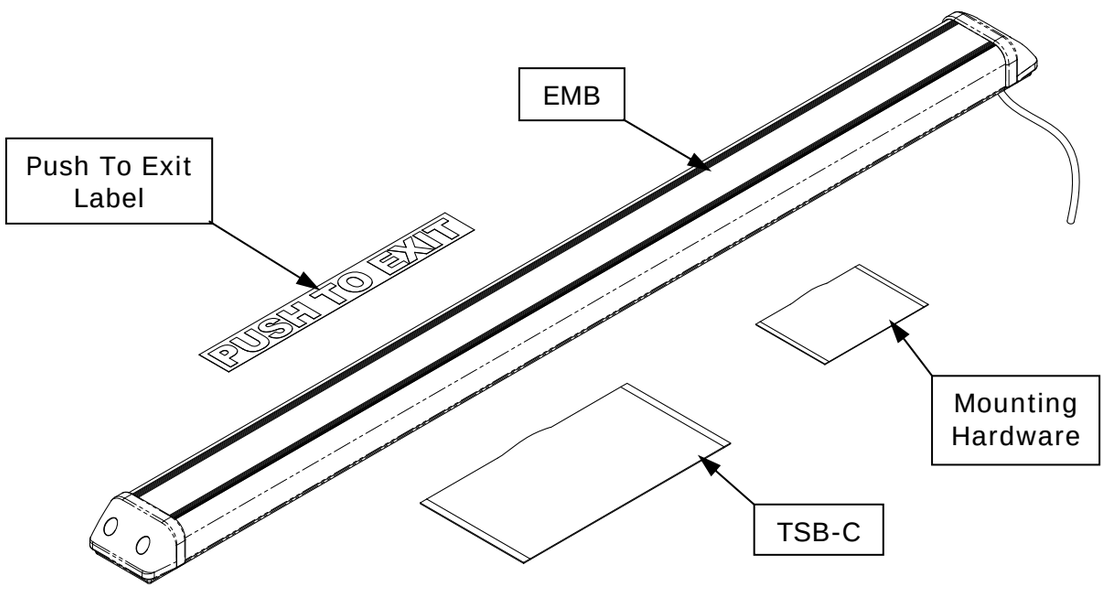

MOUNTING HARDWARE

 4X – 1/4-20 Blind Nut	 4X – External Tooth Washer	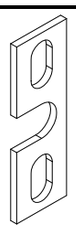 2X – End Mount Retainer
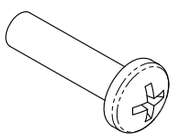 4X – 1/4-20 x 1" Long Phillips Pan Head	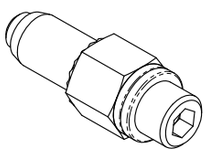 1X – Blind Nut Installation Tool	 2X – E-clip

© Copyright, 2011, all rights reserved

3. DOOR PREPARATION

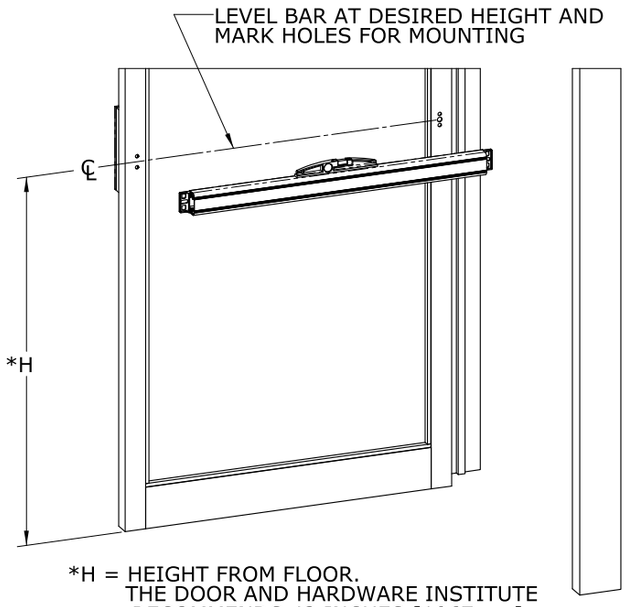

<u>New Installation</u>:

- With the door in the closed position, verify that the bar fits between the stops of the door frame. If not, the bar may be shortened as described in *Section 6*.
- Review the following illustrations and determine the mounting configuration to be used (i.e. hollow metal, solid wood or through door).
- Using a Phillips screwdriver, remove the bar end caps.
- Position and level bar against inside of door between frame stops.
- Using the holes in the bar end mounts and/or the *Mounting Diagram*, mark hole locations for mounting.

<u>Replacement Install</u>:

- Remove existing bar and hardware.

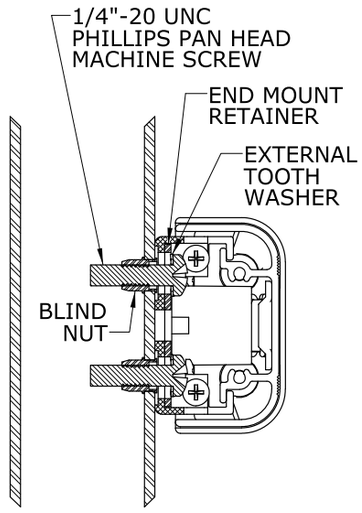

Hollow Metal Door (Blind Nut)

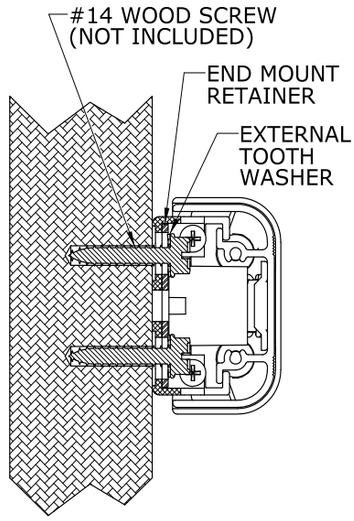

Solid Wood Door (Screw)

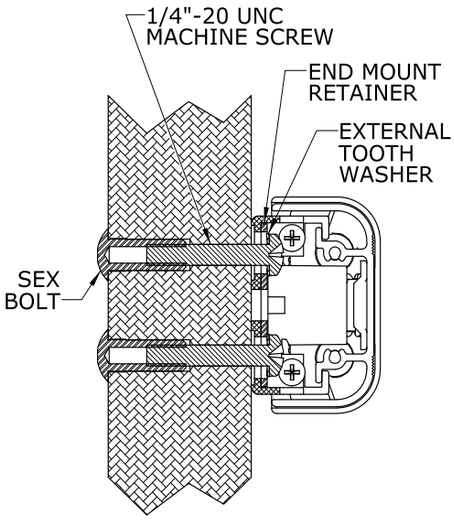

Through Door Mount
(Requires EMB-TDM Kit)

<u>Hollow Metal Door</u>:

- Drill holes through mounting surface only as shown in the following *Mounting Diagram* (*Detail A* and *B*).
- Install blind nuts as described in the *Blind Nut Installation* section.

<u>Solid Wood Door</u>:

- From the mounting surface drill four (4) 7/32" [5.5mm] diameter holes to the depth of the #14 screws to be used.

<u>Through Door</u>:

The through door mount configuration requires the EMB-TDM accessory kit. This kit, which may be ordered separately, provides a secure through-the-door attachment of the EMB to various door types. Please follow the instructions included with the EMB-TDM kit for proper installation.

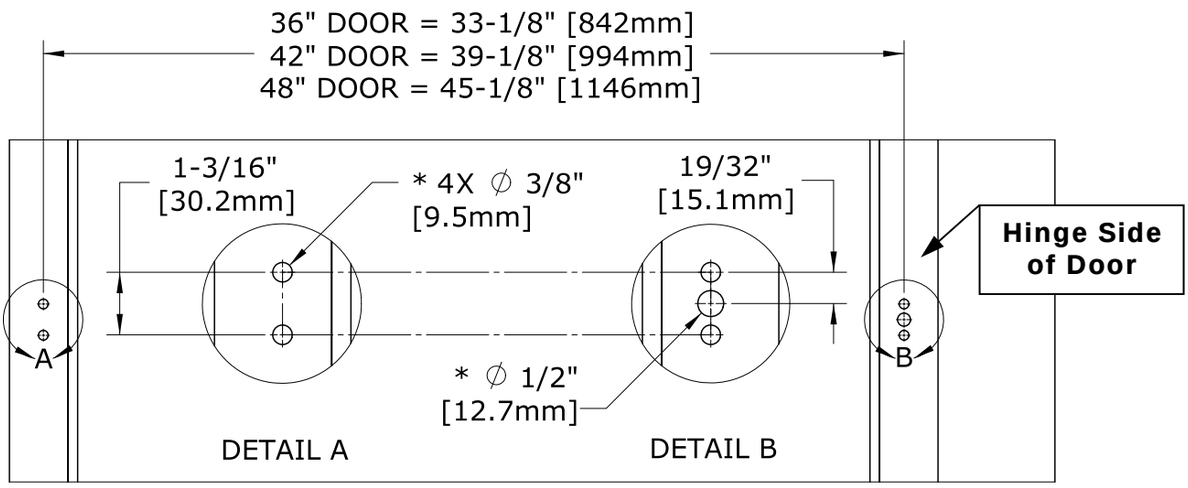

Mounting Diagram
Hollow Metal (Aluminum Frame Glass) Door Preparation Shown

*** NOTE: Drill holes through mounting side of hollow doors only!**

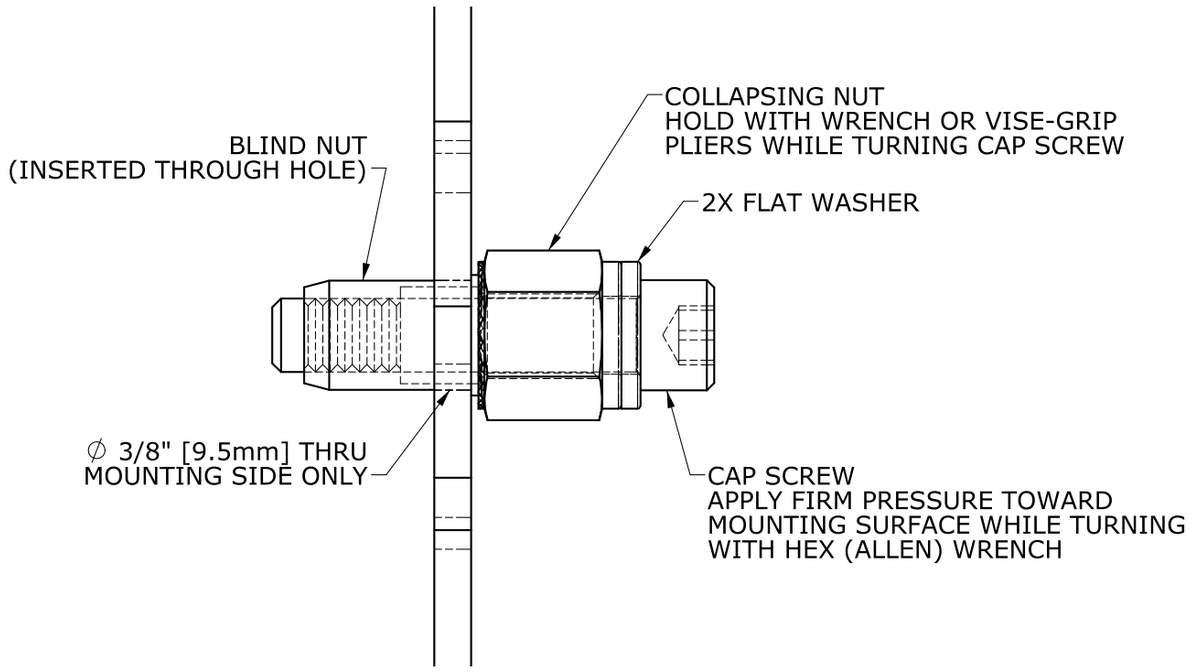

<u>Blind Nut Installation</u>:

- Insert the blind nut of the installation tool into a 3/8” [9.5mm] diameter hole.
- Hold the collapsing nut with a 1/2” box end wrench.
- While maintaining pressure toward the mounting surface, use a 3/16” hex wrench to tighten the cap screw and collapse the blind nut.
- Once the blind nut is firmly collapsed, remove the tool by unthreading the cap screw from the installed nut.
- Place another blind nut onto the installation tool and install remaining blind nuts using the same procedure.

4. INSTALLATION

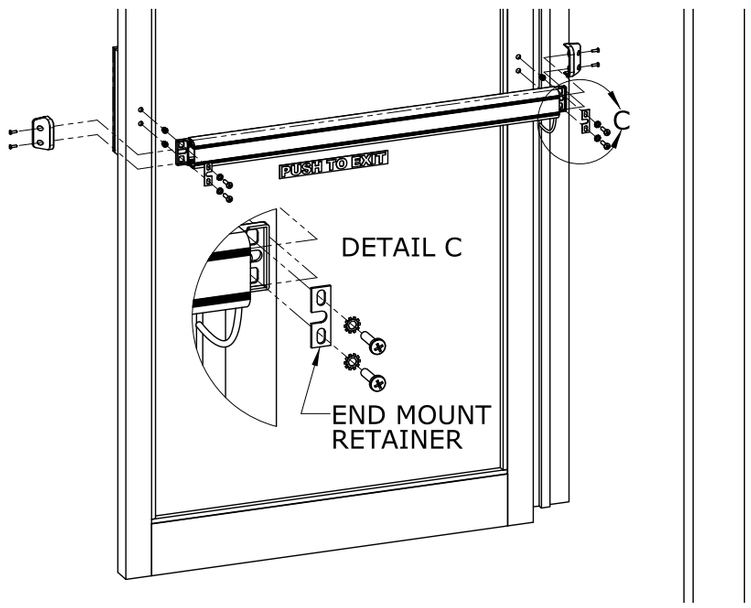

Mount Bar to Door:

- Feed wire cable through hole in door, or route wire through the end cap (See *Wire Routing* instructions in *Section 5*).
- Install bar to door (*Detail C*) using included hardware – or the hardware from previous bar installation.
- Ensure that the end mount retainer is used to provide secure attachment to door.
- Connect electrical circuit(s) and test operation (See *Section 7* for general wiring diagrams).
- Install bar end caps and the push to exit label.

5. WIRE ROUTING

Routing the EMB wire cable from a solid wood door to the frame can optimally be accomplished utilizing a concealed electrical power transfer device (such as Securitron's EPT, EPTL, CEPT or SEPT). Another alternative for solid or glass door mounting of the EMB is routing the wire cable through the bar's end cap. See *Wire Routing Through End Cap, Section 5.1* for detailed instructions on implementing this option.

Routing the wire from a hollow metal door to the frame may be achieved using the included TSB-C armored door cord. The TSB-C is normally installed toward the top and along the hinge side of the door. The following step-by-step instructions may be used to install the TSB-C:

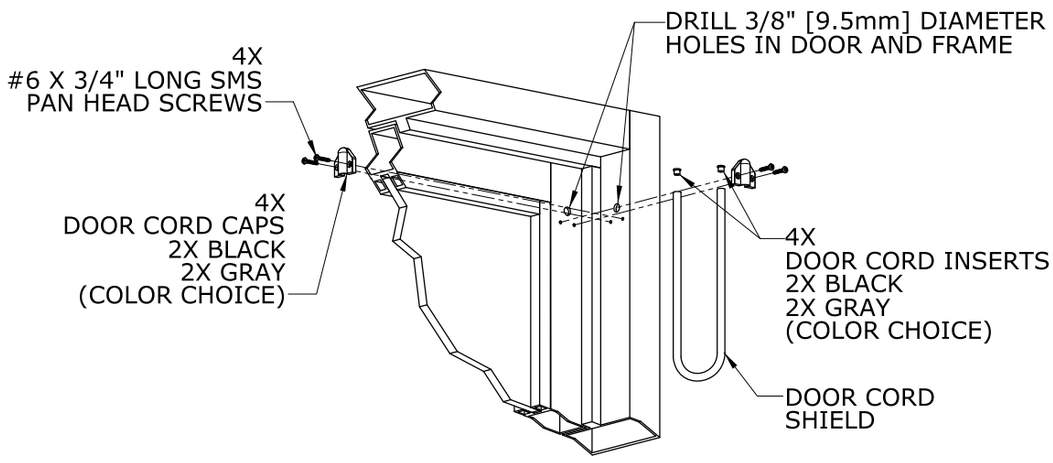

TSB-C Installation:

- Drill a 3/8" [9.5mm] diameter hole in both the door and frame as shown.
- Position door cord caps to fully cover each of the 3/8" [9.5mm] diameter holes, and then mark the two (2) mounting holes for each cap.
- Drill a 1/8" [3.2mm] diameter hole at each of the previously marked cap mounting hole locations.
- Insert one door cord insert into each end of the flexible door cord shield.
- Run wire cable from the hole in the door through the door cord shield (with inserts).
- Route wire cable through hole in frame and make electrical connections.
- Insert each end of the door cord shield into one of the cord caps. Ensure that the spiral grooves of the cord shield are engaged by the teeth inside the cord cap.
- Install the two (2) cord caps, one to the door and one to the frame, using the provided #6 screws.

5.1 WIRE ROUTING THROUGH END CAP (OPTIONAL)

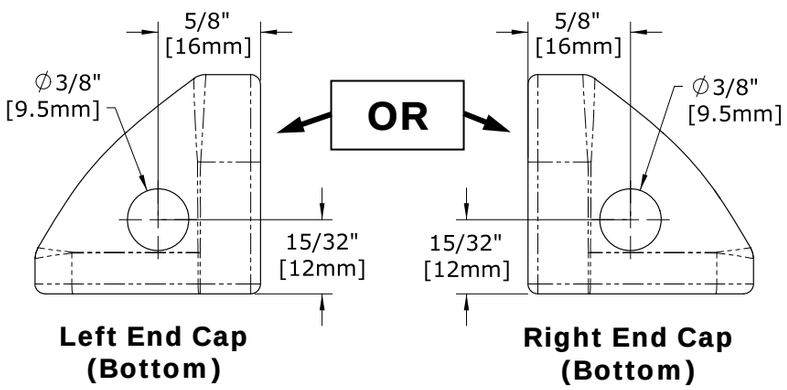

Drill End Cap:

- Determine which bar end cap to feed the flexible door cord shield into. Normally the bar wire cable and door cord shield go to the hinge side of door.
- Mark and/or center punch the bottom side of the chosen end cap at the location shown.
- Drill a 3/8" [9.5mm] diameter hole through the wall of the end cap.

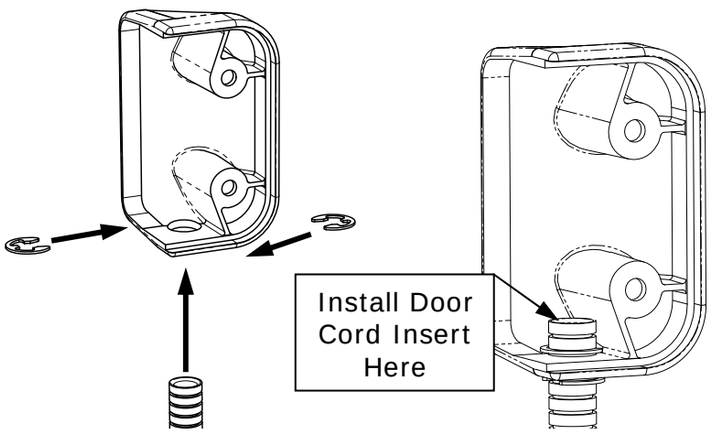

Install Cord Shield to Cap:

- Insert the door cord shield through the hole drilled in the end cap.
- Secure cord shield in place through the hole using two (2) provided E-clips. (One to the inside and one to the outside of the cap).
- Install a door cord insert into each end of the door cord shield.
- Route bar wire cable through the cord shield.
- Install the end cap to the end of the bar.

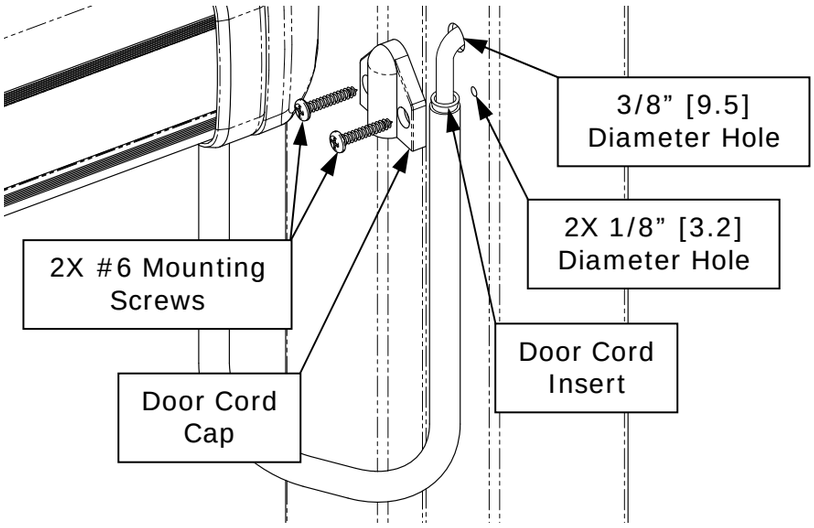

Install Cord Shield to Frame:

- Drill a 3/8" [9.5mm] diameter hole into the door frame at the desired position adjacent to bar end mount.
- Position door cord cap to fully cover the 3/8" [9.5mm] diameter hole, and then mark the two (2) mounting holes.
- Drill two (2) 1/8" [3.2mm] holes at the marked locations.
- Install door cord insert over end of bar wire cable and slide up and into the loose end of the flexible door cord shield.
- Route wire cable through hole in frame and make electrical connections.
- Insert the end of the door cord shield into the cord cap. Ensure that the spiral grooves of the cord shield are engaged by the teeth inside the cord cap.
- Install the door cord cap over the wire cable and door cord shield, and then secure into place using the two (2) provided #6 screws.

6. SHORTENING THE BAR (OPTIONAL)

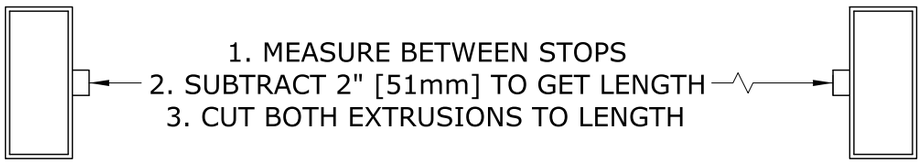

Measure for fit:

- Measure the distance between stops on the door frame.
- Subtract 2” [51mm] from the distance measured between stops. This will be the measurement to use to cut both of the aluminum bar extrusions.
  - Example: The distance between stops is 31-3/4 inches [806mm], subtract 2 inches [51mm] = total extrusion length of 29-3/4 inches [755mm].
- Remove both of the end caps from the front bar extrusion and remove the end mount located opposite the wire cable end of the bar from the rear bar extrusion.

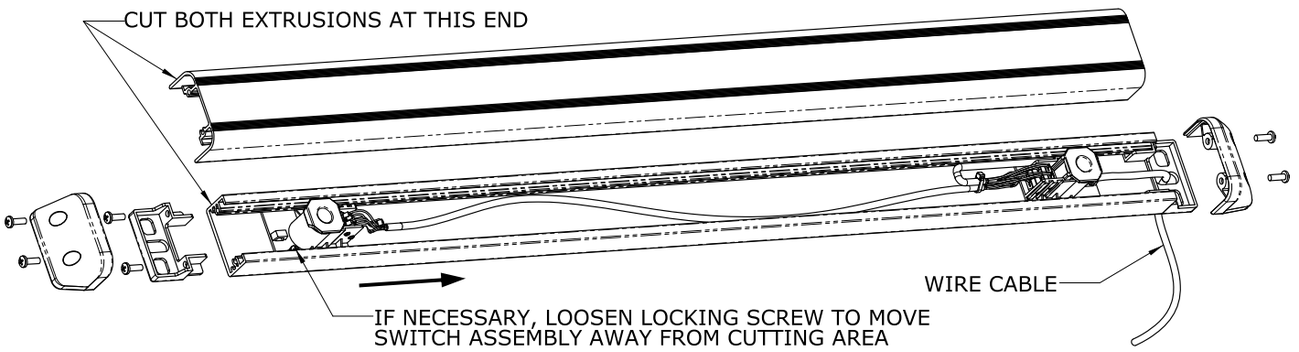

Cut to size:

- Slide the front bar extrusion completely off of the bar assembly and mark required length.
- Using a chop or miter saw, cut the front bar extrusion to length.
- Using same measurement, mark the length for the rear bar at the end of the extrusion opposite the wire cable end.
- Using a chop or miter saw, cut the marked end (opposite the wire cable) to length.
- Using compressed air clean all debris from cutting operations out of the inside of the bar.

7. ELECTRICAL CONNECTION

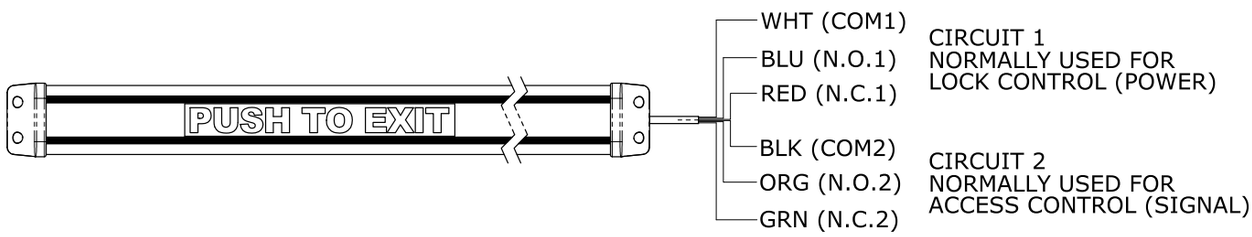

Typical Wiring Configurations:

The following wiring diagrams are provided as examples of various egress control configurations.

Single Magnetic Lock:

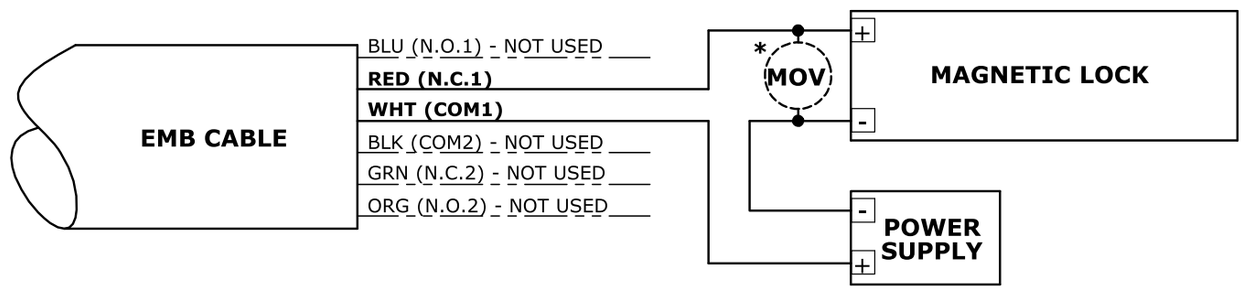

Note:

Each wiring diagram shows an MOV wired in parallel with the magnetic lock. An MOV acts to suppress the inductive kickback generated by a lock which, if left unsuppressed, could greatly shorten the life of the bar's switch contacts. The MOV has no polarity, but in order to function properly it should be spliced into the wiring as close to the lock as possible. An MOV is provided with each EMB unit.

If a Securitron Magnalock is used in an installation, the implementation of an MOV is NOT necessary as the Magnalock is already internally suppressed.

Double-Door/Dual Magnetic Locks:

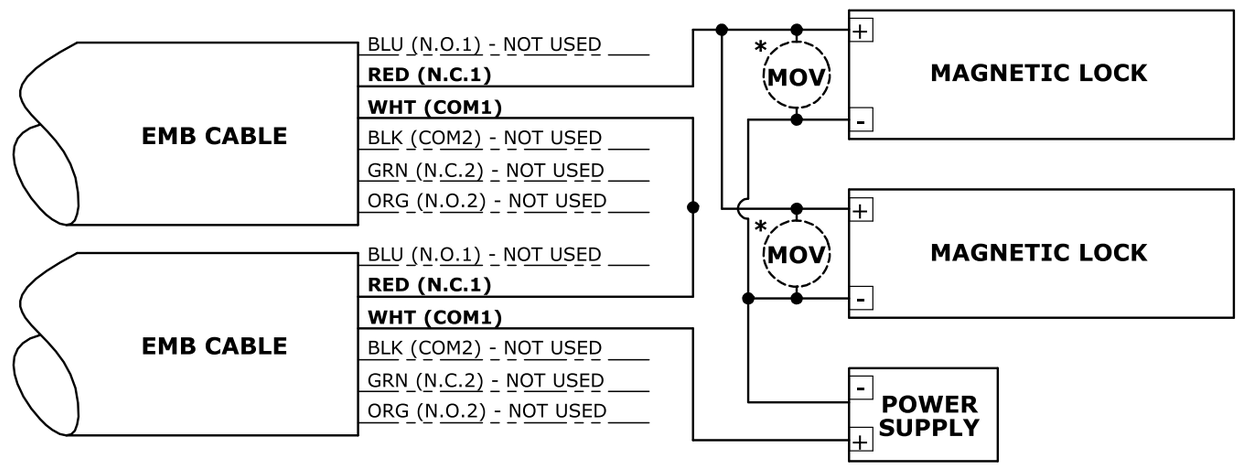

Double Break Wiring

Many installations include a controlled access device such as a digital keypad or card reader. Such devices typically have a REX (request to exit) input. When dry contacts close on this input, the entry device will open the lock for the same amount of time that is programmed for entry. Implementation of the REX input for exit can provide timed exiting. Also, for most entry controls, the REX input must be used for exiting to avoid an alarm condition at the door.

If the REX input alone is used for exiting, a safety/reliability problem will exist. If the entry device malfunctions, exit will not be possible and people may be trapped. It is recommended that double break wiring which is supported by the EMB be used. The EMB normally closed contacts are used to break power to the fail safe electric lock while the normally open contacts trip the REX input of the controlled entry device. This releases the lock a second time, hence the term, "double break". If the controlled entry device fails for any reason, direct exit is still possible.

The following diagram illustrates a typical double break wiring circuit.

Double Break Wiring:

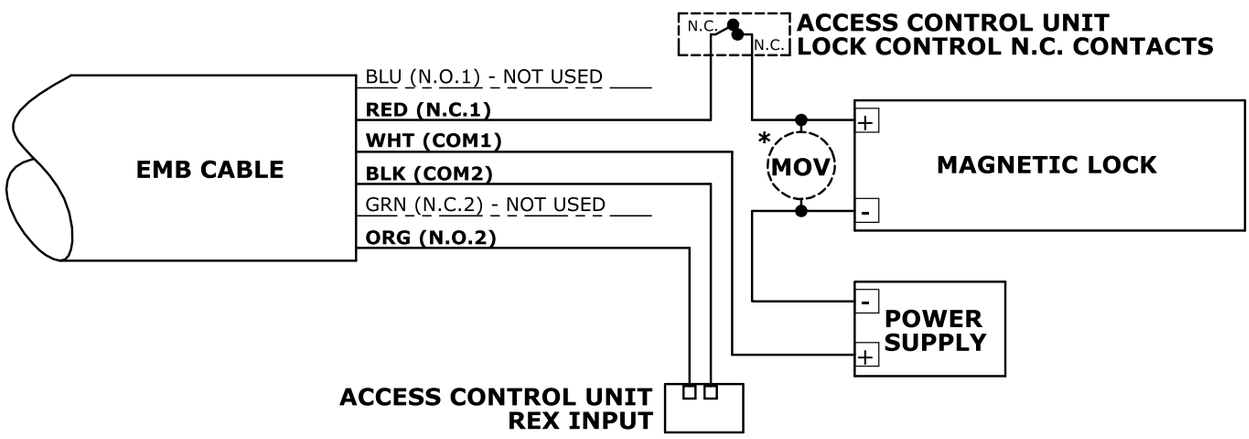

ELECTRO-MECHANICAL BAR USAGE NOTES:

As the EMB is normally used to permit egress on an electrically secured door, ensure that all applicable building and fire codes are being followed. Verify installation with local building and/or fire prevention codes and regulations.

The EMB may not be used on a fire rated door that requires a fire rated latch! The EMB has no latch. In some instances however, fire doors are permitted on openings where a fire rated barrier is not required. Use of the EMB should always be verified and approved through local building code and/or fire prevention agencies.

IF YOU ENCOUNTER PROBLEMS WITH THE INSTALLATION OF THIS PRODUCT, CALL SECURITRON: 1-800-MAG-LOCK

8. MAGNACARE® LIFETIME REPLACEMENT WARRANTY

For warranty information visit: www.securitron.com/en/site/securitron/About/MagnaCare-Warranty