SECURITRON EMB-TDM
ELECTRO-MECHANICAL BAR - THROUGH DOOR MOUNT KIT
INSTALLATION INSTRUCTIONS

1. PRODUCT DESCRIPTION

The EMB-TDM kit has been developed to provide the necessary components to create a very secure through-the-door attachment of the EMB to a solid wood or hollow metal door. Along with these instructions, the kit should include the following items:

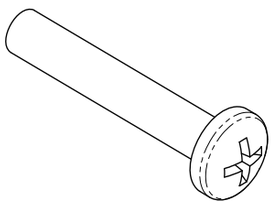	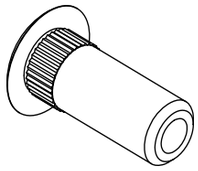
4X 1/4-20 X 1-1/2” Long Phillips Pan Head Screws	4X 1/4-20 Sex Bolts

2. RECOMMENDED TOOLS

Power Drill	Drill Bits: 9/32” [7.0mm] and 3/8” [9.5mm]
Center Punch	Screwdriver: #2 or #3 Phillips

3. INSTALLATION INSTRUCTIONS

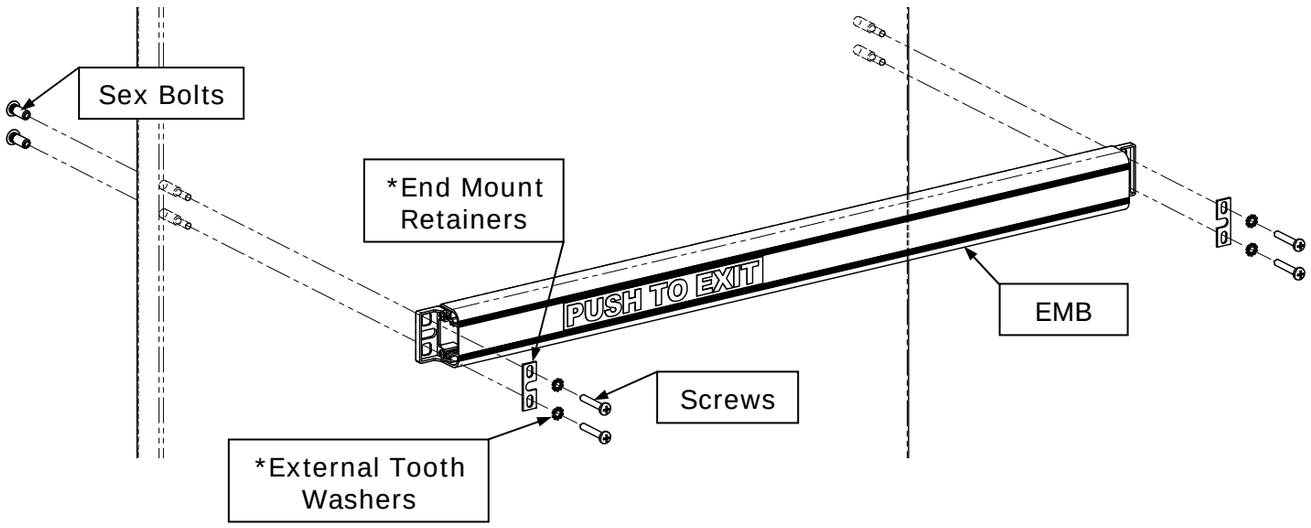

*** The end mount retainers and external tooth washers shown are provided with the original EMB hardware.**

3.1. BAR POSITIONING AND MOUNTING HOLE MARKING

All marking and door preparation should be performed in accordance with the EMB Series product installation instruction manual.

© Copyright, 2011, all rights reserved

3.2. BOLT THROUGH DOOR PREPARATION:

Figure 1 illustrates a section view of the through door mount (on a solid wood door). This configuration may be used on solid wood doors, hollow or solid metal doors, or chalk filled *fire doors.

***Note: The Electro-Mechanical Bar may not be used on a fire rated door that requires a fire rated latch! The EMB has no latch. Occasionally however, fire doors are permitted on openings where a fire rated barrier is not required. Use of the EMB should always be verified and approved through local building code and/or fire prevention agencies.**

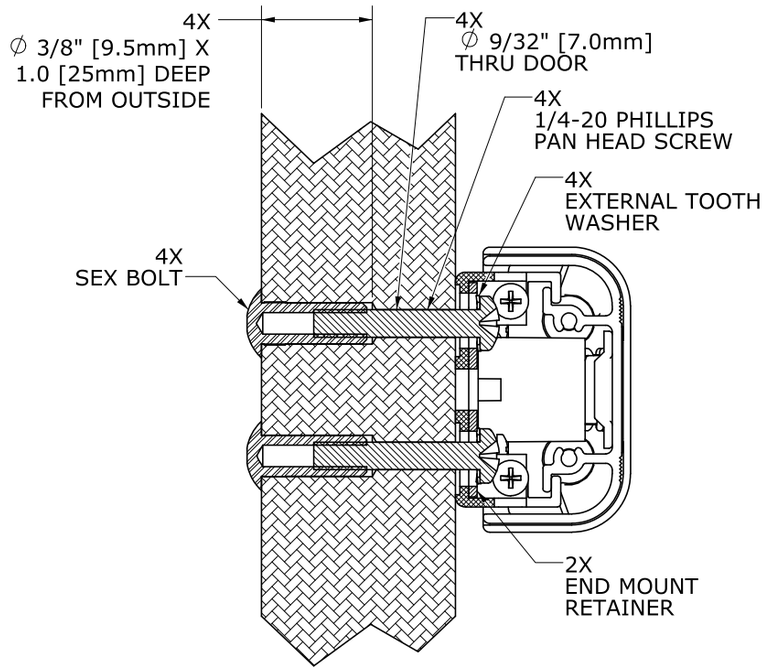

STANDARD THROUGH DOOR MOUNT

Figure 1

Note: Ensure that the two (2) end mount retainers and the (4) external tooth washers provided with the EMB unit are used inside the end mount assemblies at each end of the bar. These components will assure the most secure mount of the EMB to the door.